STATE OF KANSAS ENERGY & SERVICE CENTER

Kansas
Department of Administration



NOT FOR CONTSTRUCTION

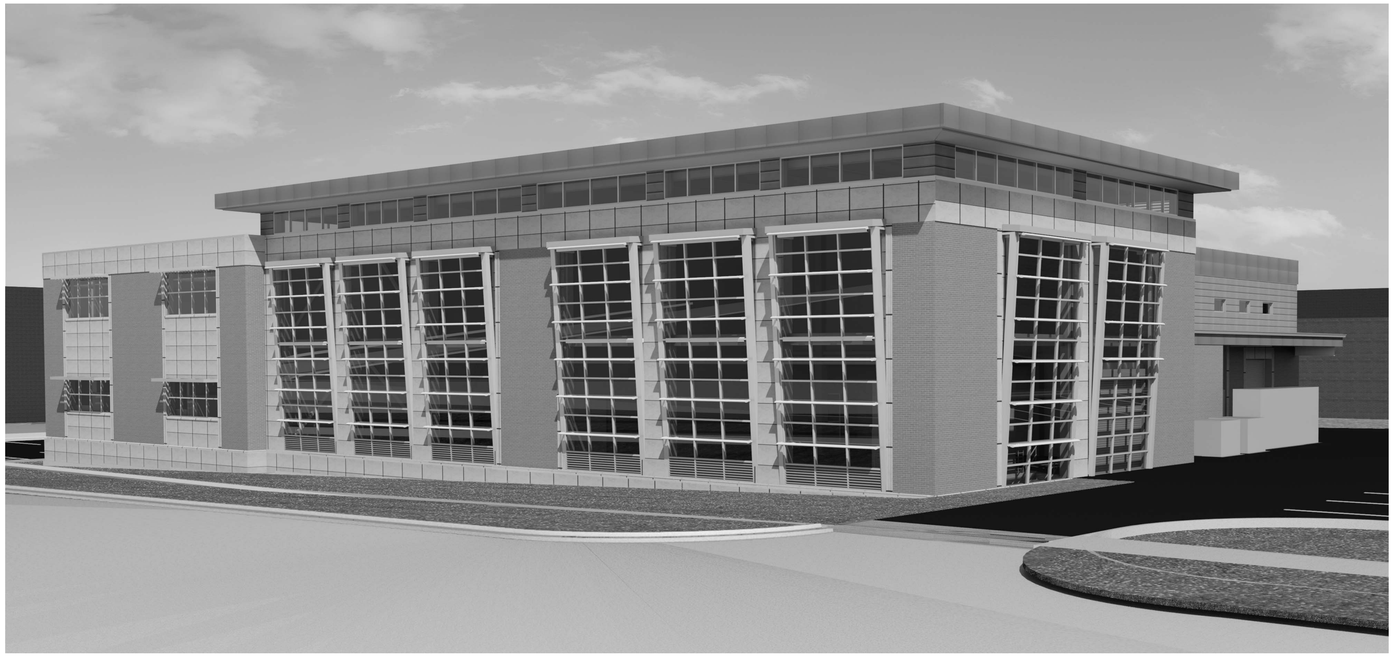

NOT FOR CONTSTRUCTION

SHEET INDEX

INFORMATION
G101 TITLE SHEET
G201 INFORMATION
G301 CODE FOOTPRINTS

SITE
C050 DEMOLITION & CONSTRUCTION PHASING PLAN - PHASE IA & IB
C051 DEMOLITION & CONSTRUCTION PHASING PLAN - PHASE II
C052 HISTORICAL DRAWING
C100 SITE PLAN
C101 TUNNEL PLAN & PROFILE
C102 SITE DETAILS I
C103 SITE DETAILS II
C200 GRADING PLAN
C300 UTILITY PLAN
C301 SEWER DETAILS
C302 MANHOLE DETAILS
C303 WATER DETAILS
C400 TRAFFIC CONTROL PLAN - PHASE IA & IB
C401 TRAFFIC CONTROL PLAN - PHASE II
C402 TRAFFIC CONTROL DETAILS I
C403 TRAFFIC CONTROL DETAILS II
C404 TRAFFIC CONTROL DETAILS III
C500 EROSION CONTROL PLAN
C501 EROSION CONTROL DETAILS I
AS101 ARCHITECTURAL SITE PLAN
AS102 LANDSCAPE PLAN AND SITE DETAILS
AS103 UNDERSLAB DRAINAGE
AS104 NORTH ENTRY PLANS AND DETAILS
AS105 ARCHITECTURAL SITE PLAN ELEVATIONS & DETAILS

ARCHITECTURAL
A101 FIRST FLOOR
A102 SECOND FLOOR
A103 CLERESTORY PLAN
A104 ENLARGED FLOOR PLANS AND DETAILS
A105 STATE HOUSE FLOOR PLANS
A201 BUILDING ELEVATIONS
A202 BUILDING ELEVATIONS
A301 BUILDING SECTIONS
A302 WALL SECTIONS
A303 WALL SECTIONS
A304 WALL SECTIONS
A305 STAIRS AND ELEVATORS
A306 STAIR DETAILS
A307 DETAILS
A308 DETAILS
A401 ROOF PLAN
A501 DOOR, FRAME, & WINDOW SCHEDULES & DETAILS
A502 DOOR, FRAME, & WINDOW DETAILS
A601 REFLECTED CEILING PLAN FIRST FLOOR
A602 REFLECTED CEILING PLAN SECOND FLOOR
FE101 FIXED EQUIPMENT PLANS
FE201 SIGNAGE

STRUCTURAL
S100 GENERAL NOTES AND SECTIONS
S101 FOUNDATION PLAN
S102 SECOND FLOOR FRAMING PLAN
S103 LOW ROOF FRAMING PLAN
S104 HIGH ROOF FRAMING PLAN
S200 FOUNDATION SECTIONS
S201 FOUNDATION SECTIONS
S300 FRAMING SECTIONS
S301 FRAMING SECTIONS
S302 FRAMING SECTIONS
S400 FRAMING ELEVATIONS
S500 TUNNEL AND PIPING SUPPORT PLAN
S501 STAIR FRAMING AND SECTIONS

MECHANICAL
ME001 MECHANICAL AND ELECTRICAL SYMBOLS LIST
ME002 MECHANICAL AND ELECTRICAL ABBREVIATIONS LIST
ME101 SITE PLAN - MECH/ELEC
ME102 SITE PLAN - FIBER OPTIC CABLING
ME103 PARTIAL SITE PLAN - FUEL STORAGE TANKS
ME201 MECHANICAL SCHEDULES
ME202 MECHANICAL SCHEDULES
ME203 MECHANICAL SCHEDULES
ME204 MECHANICAL SCHEDULES
ME301 AUTOMATIC SYSTEM CONTROL DIAGRAM
ME302 SEQUENCE OF OPERATION
ME303 BUILDING AUTOMATION SYSTEM DIAGRAMS
PH101 FIRST FLOOR PLAN- BELOW-GRADE PLUMBING
PH102 FIRST FLOOR PLAN- PLUMBING
PH103 SECOND FLOOR PLAN- PLUMBING
PH104 ROOF PLAN- PLUMBING
PH201 PLUMBING SCHEDULES
MH101 FIRST FLOOR PLAN - HVAC
MH102 SECOND FLOOR PLAN - HVAC
MH103 FIRST FLOOR PLAN - HVAC
MH201 HVAC SECTIONS
MH202 MECHANICAL DETAILS
MP101 FIRST FLOOR PLAN - HVAC PIPING
MP102 SECOND FLOOR PLAN - HVAC PIPING
MP201 PARTIAL FIRST FLOOR PLAN - MECHANICAL PIPING
MP202 PARTIAL SECOND FLOOR PLAN - MECHANICAL PIPING
MP301 PARTIAL FIRST FLOOR PLAN - BOILER CHEMICAL TREATMENT
MP302 MECHANICAL PIPING SCHEMATIC
MP401 SECTIONS - MECHANICAL PIPING
MP402 SECTIONS - MECHANICAL PIPING
MP403 SECTIONS - MECHANICAL PIPING
FH101 FIRST FLOOR PLAN - FIRE PROTECTION
FH102 SECOND FLOOR PLAN - FIRE PROTECTION

ELECTRICAL
EP101 FIRST FLOOR PLAN- POWER
EP102 SECOND FLOOR PLAN- HVAC POWER
EP103 SECOND FLOOR PLAN- POWER
EP104 SECOND FLOOR PLAN- HVAC POWER
EP105 ROOF PLAN- POWER
EP201 PARTIAL FIRST FLOOR PLANS- POWER
EP301 ELECTRICAL DETAILS
EP302 ONE-LINE DIAGRAM
EP401 ELECTRICAL SCHEDULES
EP402 ELECTRICAL DETAIL AND SCHEDULES
EL101 FIRST FLOOR PLAN- LIGHTING
EL102 SECOND FLOOR PLAN- LIGHTING
ET101 FIRST FLOOR PLAN- TELECOM
ET102 SECOND FLOOR PLAN- TELECOM

FIRE ALARM
EY101 FIRST FLOOR PLAN- FIRE ALARM
EY102 SECOND FLOOR PLAN- FIRE ALARM
EY201 FIRE ALARM- DETAILS AND SCHEDULES

MECHANICAL
MT101 KEC UTILITY TUNNEL- HVAC PIPING
MT102 KEC UTILITY TUNNEL- HVAC PIPING
MT103 KEC UTILITY TUNNEL- HVAC PIPING
MT104 KEC UTILITY TUNNEL- HVAC PIPING
MT105 KEC UTILITY TUNNEL- HVAC PIPING
MT201 PARKING GARAGE PLAN- HVAC PIPING
MT202 PARTIAL PARKING GARAGE PLAN- HVAC PIPING
MT203 PARKING GARAGE ELEVATIONS- HVAC PIPING
MT204 PARKING GARAGE ELEVATIONS- HVAC PIPING
MT205 PARKING GARAGE ELEVATIONS- HVAC PIPING
MT301 KSH MECHANICAL VAULT- HVAC PIPING
MT302 KSH MECHANICAL VAULT- HVAC PIPING
MT303 KSH MECHANICAL VAULT- HVAC PIPING
MT304 KSH MECHANICAL VAULT- HVAC PIPING
MT305 KSH MECHANICAL VAULT- HVAC PIPING

ELECTRICAL
EPT101 KEC UTILITY TUNNEL- ELECTRICAL
EPT201 KSH NW MECHANICAL VAULT- ELECTRICAL

PROJECT CONTACTS

OWNER
STATE OF KANSAS
Kansas Department of Administration
Office of Facilities and Procurement Management
800 SW Jackson St., Suite 700
Topeka, KS 66612

George Steele
(785) 296-4648

ARCHITECT
HTK Architects, PA
900 S. Kansas Ave., Suite 200
Topeka, KS 66612

Dennis Haugh
(785) 266-5515

CIVIL ENGINEER
Schmidt, Beck, & Boyd Engineering
1415 SW Topeka Blvd.
Topeka, KS 66612

Kevin Beck
(785) 215-8630

STRUCTURAL ENGINEER
Bob D. Campbell & Co.
4330 Belleview
Kansas City, MO 64111

Clark Basinger
(816) 531-4144

MECHANICAL, ELECTRICAL, PLUMBING ENGINEER
Latimer and Sommers & Associates, P.A.
3634 Southwest Summerfield Drive
Topeka, KS 66614

Bill Bassette
(785) 235-3232

HTK ARCHITECTS PA
900 S. KANSAS AVE., SUITE 200
TOPEKA KANSAS 66612
T 785.266.5515
9300 W 110TH ST. STE. 150
OVERLAND PARK, KANSAS 66210
P 913.663.3373
www.htkarchitects.com

RICHARD BLACKBURN
AGENCY NO. 3435
KANSAS
PROFESSIONAL ARCHITECT

DENNIS A. HAUGH
LICENSED
4-15-15
2567
KANSAS
PROFESSIONAL ARCHITECT

DATE:
- 4-15-15

REVISED DATE:
- 12-18-14
- 2-9-15
- 3-10-15
-

HTK PROJECT NUMBER:
- 1410.03

Department of Administration
Office of Facilities and
Procurement Management
800 SW Jackson, Suite 700
Topeka, Kansas 66612-1216
Phone: 785-296-2311
FAX 785-296-3456

STATE OF KANSAS
STATE OF KANSAS ENERGY & SERVICE CENTER
221 SW 7th Street
BUILDING NUMBER 173000038

DATE: 4-15-15 DRAWN BY: Author CHECKED BY: Checker REV:

TITLE SHEET

A-012651

G101

CONSTRUCTION DOCUMENTS

4/16/2015 12:24:56 PM C:\Users\jms\Documents\REVIT\State of Kansas Energy_Central_jms.rvt

JCSBC
2-2-2016
Att.9G.--0001

GRAPHIC SYMBOLS

- EXPANSION JOINT
- CONTROL JOINT
- FLOOR COVERING CHANGE
- SAWCUT CONCRETE FLOOR JOINTS- REFERENCE STRUCTURAL DRAWINGS FOR COMPLETE LOCATIONS
- 100'-0" — NEW FINISH SPOT ELEVATIONS IN FEET AND INCHES (OR ON SITE PLAN IN FEET AND DECIMALS)
- 100'-0" — EXISTING SPOT ELEVATION
- NEW DOOR
- EXISTING DOOR
- 101 (102) 101 — DOOR MARK - REFERENCE DOOR AND FRAME SCHEDULE
- LOCATION OF SYMBOL ON PAIR OF DOORS INDICATES THE ACTIVE LEAF
- 1 — PLAN NOTES
- SECTION MARK- 1 = DETAIL NUMBER, A2.2 = SHEET NUMBER
- BUILDING SECTION
- WALL SECTION
- INTERIOR ELEVATION MARKER: A2.2 = SHEET NUMBER, 6 = DETAIL NUMBER
- BUILDING ELEVATION MARKER: A2.1 = SHEET NUMBER, 6 = DETAIL NUMBER
- SIM / 1 / A1.1 — DETAIL MARKS: 1 = DETAIL NUMBER, A1.1 = SHEET NUMBER, SIM = SIMILAR
- LEVEL 1 00'-0" — ELEVATION MARK IN FEET AND INCHES
- WOOD FRAME MARK - REFERENCE FRAME ELEVATIONS.
- S1 — STEEL FRAME MARK - REFERENCE FRAME ELEVATIONS
- A1 — ALUMINUM FRAME MARK - REFERENCE FRAME ELEVATIONS
- 1 — GLASS TYPE - REFERENCE GLASS SCHEDULE ON SHEET A501
- M12a(3) — PARTITION MARK - REFERENCE PARTITION SCHEDULE (#) INDICATES FIRE RATING OF WALL IN HOURS (S) INDICATES SMOKE PROTECTED PARTITION
- TB - 4' MB - 6' — TB-4': TACKBOARD - 4' LENGTH. MB-6': MARKER BOARD = 6' LENGTH. (NOTE: MOUNT BOTTOM @ 2'-6" A.F.F. U.N.O.)
- MR - 4' TS - 6' — TS: TACK STRIP - 6' LENGTH. MR - 4': MAP RAIL 4'-0" MOUNT @ 6'-6" A.F.F.
- PS - 5' WB - 6' — PS - 5': ELECTRIC PROJECTION SCREEN, 5'-0" IN LENGTH. WB - 6': INTERACTIVE WHITE BOARD, 6'-0" (OWNER PROVIDED U.N.O.)
- MASONRY CONTROL JOINT FROM BEARING TO TOP OF WALL. DRYWALL CONTROL JOINT FROM BEARING TO TOP OF WALL. PROVIDE ON BOTH SIDES OF WALL
- MASONRY CONTROL JOINT FROM LINTEL BEARING TO TOP OF WALL OR BOND BEAM. DRYWALL CONTROL JOINT FROM TOP OF OPENING TO TOP OF WALL. MASONRY OR DRYWALL CONTROL JOINT FROM BOTTOM OF OPENING TO WALL BEARING. PROVIDE ON BOTH SIDES OF WALL
- MASONRY DUMMY CONTROL JOINT. LOCATE SIMILAR TO CONTROL JOINT ABOVE
- B6 B6 B6 — CASEWORK DESIGNATION; NUMBER INDICATES UNIT NUMBER IDENTIFIED IN MANUFACTURED CASEWORK SCHEDULE. REFERENCE SPECIFICATIONS.
- 1i — EQUIPMENT OR FURNISHINGS SHOWN ON FLOOR PLANS. INDICATES FURNISHINGS BY OWNER (N.I.C.) OR FIXED EQUIPMENT PLANS
- FURNITURE TAG, WHEN FURNITURE IS INCLUDED IN CONTRACT
- LOCKERS: X INDICATES FILLER UNITS
- FD 99'-10" — FLOOR DRAIN (ELEVATION IN FEET AND INCHES WHERE INDICATED)
- MOP/JANITOR SINK
- WATERCLOSET, URINAL, LAVATORY (RESPECTIVELY)
- D.F.(2) D.F. — DRINKING FOUNTAIN - REFERENCE PLUMBING
- F.E.C. — F.E.C.: FIRE EXTINGUISHER CABINET F.H.C.P: FIRE HOSE CABINET
- A1 B2 C3 — COLUMN: A1= COLUMN NUMBER (IF NOT SHOWN, COLUMN NUMBER PER GRID)
- COLUMN
- COLUMN GRID NUMBERS AND/OR LETTERS

Note: REF. SITE PLAN LEGEND, ROOF PLAN LEGEND AND CEILING PLAN LEGEND FOR ADDITIONAL NOTES AND LEGENDS.

ABBREVIATIONS

NOTE: REFER TO SPECIFICATIONS FOR ADDITIONAL ABBREVIATIONS OF REFERENCED STANDARDS, REGULATORY AGENCIES, ASSOCIATIONS AND OTHERS

A.B	ANCHOR BOLT	MAS	MASONRY	
ABV	ABOVE	MAT, MATL	MATERIAL	
AD	ACTUAL DIMENSION, ACCESS DOOR	MAX	MAXIMUM	
		MB	MACHINE	
ADJ	ADJACENT	MC	MECHANICAL CONTRACTOR	
AFF	ABOVE FINISH FLOOR	MDO	MEDIUM DENSITY OVERLAY	
AHU	AIR HANDLING UNIT	MECH	MECHANICAL, MECHANISM	
ALT	ALTERNATE	MFGR	MANUFACTURER	
ALUM	ALUMINUM	MH	MANHOLE	
ANCH	ANCHOR	MIN	MINIMUM	
∠	ANGLE	MISC	MISCELLANEOUS	
ARCH	ARCHITECTURAL	MO	MASONRY OPENING	
@	AT	MS	MACHINE SCREW	
AVG R	AVERAGE "R" FACTOR FOR INSULATION	MTL	METAL	
		N	NORTH	
B/C	BACK OF CURB	NA	NOT APPLICABLE	
BD	BOARD	NC	NOT IN CONTRACT	
BLDG	BUILDING	NO.#	NUMBER	
BM	BEAM	NOM	NOMINAL	
BM	BENCH MARK	NTS	NOT TO SCALE	
BRG	BEARING	NWCMU	NORMAL WEIGHT CONCRETE MASONRY UNIT	
BTM	BOTTOM			
BUR	BUILT-UP ROOFING			
		OA	OVERALL	
CABT	CABINET	OC(S)	ON CENTER (STAGGERED, IF 2 ROWS)	
CB	CATCH BASIN	OD	OVERFLOW DRAIN	
CH	COAT HOOK	OFF	OFFICE	
CI	CAST IRON	OPER	OPERATOR, OPERABLE, OPERATING	
CIP	CAST-IN-PLACE	OPNG	OPENING	
CJ	CONTROL JOINT	OTO	OUT-TO OUT	
CL	CENTER LINE	OZ	OUNCE	
CLG	CEILING			
CMU	CONCRETE MASONRY UNIT			
CMT	CERAMIC MOSAIC TILE	PARTN	PARTITION	
CMP	CORRUGATED METAL PIPE	PBD	PARTICLE BOARD	
CO	CLEAN OUT	PC	PORTLAND CEMENT, PIECE	
COL	COLUMN	PERIM	PERIMETER	
CONC	CONCRETE	PL	PLATE	
COND	CONDITION	PLAM	PLASTIC LAMINATE	
CONST	CONSTRUCTION	PNL	PANEL	
CONT	CONTINUOUS, CONTINUE	PWD	PLYWOOD	
CR	COMMUNICATIONS RISER	PR	PAIR	
CTSK	COUNTERSUNK	PSF	POUNDS PER SQUARE FOOT	
CUH	CABINET UNIT HEATER	PSI	POUNDS PER SQUARE INCH	
		PVMT	PAVEMENT	
DBL	DOUBLE			
DF	DRINKING FOUNTAIN	QTY	QUANTITY	
DIA	DIAMETER	QT	QUARRY TILE	
DIM	DIMENSION			
DR	DOOR	R&R	REMOVE & REPLACE	
DWG	DRAWING	R	RADIUS	
DYNS(S)	DRAWING (S)	RA	RETURN AIR	
DS(O)	DOWNSPOUT (OUTLET)	RCP	REINFORCED CONCRETE PIPE	
DTL	DETAIL	RD	ROOF DRAIN	
		REF	REFER TO, REFERENCE	
E	EAST	REFL	REFLECTED	
EA	EACH	REINF	REINFORCING, REINFORCED	
EC	ELECTRICAL CONTRACTOR	REQ'D	REQUIRED	
EF	EACH FACE	REV	REVISED/ED	
EJ	EXPANSION JOINT	RJ	RUSTICATION JOINT	
ELEC	ELECTRICAL	RMS	ROOMS	
EL, ELEV	ELEVATION	RO	ROUGH OPENING	
ENCL	ENCLOSURE	RTU	ROOF TOP UNIT	
EQ	EQUAL			
EQUIP	EQUIPMENT	S	SOUTH	
EW	EACH WAY	SAN	SANITARY	
EXP	EXPANSION	SC	SAWCUT	
EXT	EXTERIOR, EXTERNAL	SD	SOAP DISPENSER	
EXIST.,EX	EXISTING	SECT	SECTION	
		SF	SQUARE FOOT	
FA	FRESH AIR	SF.CMU	SPLIT FACE CONCRETE MASONRY UNIT	
FD	FLOOR DRAIN			
FE	FIRE EXTINGUISHER	SHT	SHEET	
FEC	FIRE EXTINGUISHER CABINET	SIM	SIMILAR	
FF&O	FLUSH FLOOR CLEANOUT	SLV	SHORT LEG VERTICAL	
FH	FLAT HEAD	SMS	SHEET METAL SCREWS	
FHC	FIRE HOSE CABINET	SND	SANITARY NAPKIN DISPENSER	
FIN	FINISH	SNR	SANITARY NAPKIN RECEPTACLE	
F	FLOWLINE	SPEC	SPECIFICATION	
FL,FLR	FLOOR	SQ	SQUARE	
FLRG	FLOORING	SS	STAINLESS STEEL	
FND	FOUNDATION	STD	STANDARD	
FOS	FACE OF STRUCTURE	STL	STEEL	
FR	FIRE RATED, FIRE RESISTIVE	STRUCT	STRUCTURAL	
FRG	REFRIGERATOR	SUSP	SUSPENSION	
FS	FLOOR SINK, FOOD SERVICE	SYM	SYMMETRICAL	
FT	FEET OR FOOT			
FV	FIELD VERIFY	TB	TACKBOARD	
		TD	TOWEL DISPENSER & DISPOSER (PAPER); OR TRENCH DRAIN	
GA	GAUGE	T & G	TONGUE AND GROOVE	
GALV	GALVANIZED	TEMP	TEMPERED, TEMPORARY	
GC	GENERAL CONTRACTOR	TEXT	TEXTURED	
GEN	GENERAL	THK	THICK	
GI	GALVANIZED IRON	TLT	TOILET	
GL	GLASS	TOC	TOP OF CURB OR CONCRETE	
GYP	GYPSUM	TOS	TOP OF SLAB, STEEL OR STRUCTURE	
HB	HOSE BIBB			
HC	HANDICAPPED (ACCESSIBLE)	TP	TOILET PAPER DISPENSER	
HD	HAND DRYER	TPL	TWO PERSON LOCKER	
HDWE	HARDWARE	TWS	TACTILE WARNING SURFACE	
HD WD	HARD WOOD	TXFR	TRANSFORMER	
HM	HOLLOW METAL	TYP	TYPICAL	
HT	HEIGHT			
HORIZ	HORIZONTAL, HORIZONTALLY	UNO	UNLESS NOTED OTHERWISE	
HPL	HIGH PRESSURE LAMINATE	UR	URINAL SCREEN	
HR	HOUR			
HVAC	HEATING VENTILATING & AIR CONDITIONING	V.C.P.	VITEOUS CLAY PIPE	
		V.C.T.	VINYL COMPOSITION TILE	
ID	INSIDE DIAMETER	VERT.	VERTICAL, VERTICALLY	
INSUL	INSULATION	V.V.C.	VINYL WALL COVERING	
INT	INTERIOR			
INTERM	INTERMEDIATE	W	WEST	
WB	INTERACTIVE WHITE BOARD	W/	WITH	
		WC	WATER CLOSET	
JB	JUNCTION BOX	WDW	WINDOW	
JT(S)	JOINT(S)	W/O	WITH OUT	
		WO	WHERE OCCURS	
LB	LOCKER BENCH	WT	WEIGHT	
LLV	LONG LEG VERTICAL	WWF	WELDED WIRE FABRIC	
LT WT	LIGHTWEIGHT	WPG	WATERPROOFING	
LT	LIGHT			
LWCMU	LIGHTWEIGHT CONCRETE MASONRY UNIT			

JOBSITE SIGN

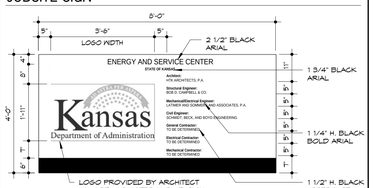

NOTES:

1) COLORS TO BE DETERMINED BY ARCHITECT PRIOR TO PRINTING.

2) PROVIDE ARIAL FONT STYLE FOR ALL TEXT. VERIFY ANY DISCREPANCIES WITH ARCHITECT.

3) PROVIDE ON DOUBLE SIDED "MDO" BOARD OR ALUMINUM. PROVIED GRAPHICS ON ONE SIDE ONLY.

4) 1-COAT ALKYD PRIMER AND 2-COATS LATEX ENAMEL FINISH COLOR ON ALL SIDES AND EDGES.

5) ERECT AND BACK BRACE WITH 4" X 4" PRESSURE-TREATED POSTS. TOP OF SIGN ELEVATION 5'-0" ABOVE GROUND. POSTS SHALL BE SET IN GROUND MIN. OF 24" AND BACK BRACED TO WITH STAND WIND LOADS. ERECT SIGN PLUMB AND LEVEL.

6) REPAIR/ REPLACE SIGN AS REQ'D FROM DAMAGES AND/ OR DETERIORATION AS REQ'D THROUGH OUT PROJECT.

7) LOCATION TO BE DETERMINED BY OWNER.

8) LOGO COLORS TO MATCH OFFICIAL DISTRICT COLORS

PARTITION TYPES

GYPSUM

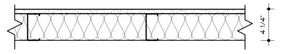

G4a — GYPSUM BOARD PARTITION: 3 5/8" METAL STUDS @ 16" OC - COVER ONE SIDE WITH 5/8" GYPSUM BOARD. EXTEND PARTITION TO UNDERSIDE OF DECK AND FILL VOIDS WITH SAFING INSULATION. FIRE RATED PARTITION - UL #U419

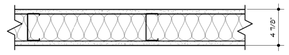

G5a — GYPSUM BOARD PARTITION: 3 5/8" METAL STUDS @ 16" OC - COVER EACH SIDE WITH 5/8" GYPSUM BOARDS. EXTEND PARTITION TO UNDERSIDE OF DECK AND FILL VOIDS WITH SAFING INSULATION. FIRE RATED PARTITION - UL #U419

G5b — GYPSUM BOARD PARTITION: 3 5/8" METAL STUDS @ 16" OC - COVER EACH SIDE WITH 5/8" GYPSUM BOARDS. EXTEND PARTITION TO 4" ABOVE CEILING.

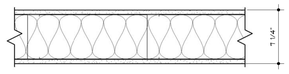

G5c — GYPSUM BOARD PARTITION: 3 5/8" METAL STUDS @ 16" OC - COVER EACH SIDE WITH 5/8" GYPSUM BOARDS. EXTEND PARTITION TO UNDERSIDE OF DECK AND FILL VOIDS WITH SAFING INSULATION. SEAL AROUND ALL PENETRATIONS TO PREVENT SMOKE FROM PASSING THROUGH.

G7a — GYPSUM BOARD PARTITION: 6" METAL STUDS @ 16" OC - COVER EACH SIDE WITH 5/8" GYPSUM BOARDS. EXTEND PARTITION TO UNDERSIDE OF DECK AND FILL VOIDS WITH SAFING INSULATION. FIRE RATED PARTITION - UL #U419

G7a (s) — GYPSUM BOARD SMOKE PROTECTED PARTITION: 6" METAL STUDS @ 16" OC - COVER EACH SIDE WITH 5/8" GYPSUM BOARDS. EXTEND PARTITION TO UNDERSIDE OF DECK AND FILL VOIDS WITH SAFING INSULATION. SEAL AROUND ALL PENETRATIONS TO PREVENT SMOKE FROM PASSING THROUGH.

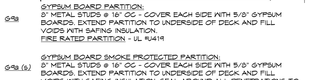

G9a — GYPSUM BOARD PARTITION: 9" METAL STUDS @ 16" OC - COVER EACH SIDE WITH 5/8" GYPSUM BOARDS. EXTEND PARTITION TO UNDERSIDE OF DECK AND FILL VOIDS WITH SAFING INSULATION. FIRE RATED PARTITION - UL #U419

G9a (s) — GYPSUM BOARD SMOKE PROTECTED PARTITION: 9" METAL STUDS @ 16" OC - COVER EACH SIDE WITH 5/8" GYPSUM BOARDS. EXTEND PARTITION TO UNDERSIDE OF DECK AND FILL VOIDS WITH SAFING INSULATION. SEAL AROUND ALL PENETRATIONS TO PREVENT SMOKE FROM PASSING THROUGH.

GYPSUM BOARD GENERAL NOTES

A) UNLESS NOTED OTHERWISE, EXTEND GYPSUM BOARD 4" ABOVE FINISHED CEILING ELEVATION.

B) REFER TO SPECIFICATIONS SECTIONS 054000 AND 092216 FOR ADDITIONAL REQUIREMENTS.

C) UNLESS NOTED OTHERWISE, PROVIDE 4" ACOUSTICAL INSULATION IN ALL PARTITIONS.

D) FRAME AROUND DUCTWORK, BACK BRACE AS REQUIRED FOR STABILITY.

E) REFER TO HOLLOW METAL FRAME DETAILS FOR ADDITIONAL DETAIL REQUIREMENTS.

F) EXTEND STUDS TO TOP RUNNER ATTACHED TO STRUCTURE ABOVE, OR BACK BRACE TO STRUCTURE AS NECESSARY TO FULLY STABILIZE THE PARTITIONS.

G) REFER TO COLUMN DETAILS FOR ADDITIONAL DETAIL REQUIREMENTS.

H) REFER TO FINISH SCHEDULE FOR WALL FINISH.

I) ALL PENETRATIONS THROUGH GYPSUM BOARD PARTITIONS EXPOSED TO VIEW WILL BE TRIMMED NEAT AND TRUE AND SEALED.

J) WHEN PARTITION EXTENDS TO STEEL BEAM ABOVE, FILL VOIDS BETWEEN DECK AND TOP OF STEEL BEAM WITH ACOUSTICAL INSULATION.

K) WHERE JOISTS PENETRATE PARTITIONS EXTENDING TO STRUCTURE ABOVE, HOLD PARTITIONS 2" CLEAR OF JOIST TO ALLOW FOR DEFLECTION AND FILL VOID WITH ACOUSTICAL INSULATION.

L) COORDINATE FRAMING WITH ALL STRUCTURAL BRACING.

M) PROVIDE GYPSUM AND FRAMING AROUND ALL COLUMNS, U.N.O.

N) ALL LOCATIONS WHERE GYPSUM WALLS AND STRUCTURE DO NOT ALIGN FRAME AROUND STRUCTURE.

MASONRY:

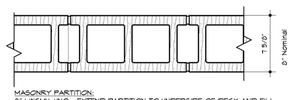

M8a — MASONRY PARTITION: 8" LWCMU, UNO - EXTEND PARTITION TO UNDERSIDE OF DECK AND FILL VOIDS WITH SAFING INSULATION. FIRE RATED PARTITION - UL #UR01, ALL C.M.U. MUST BEAR UL SYMBOL
4 HR - B-4 C.M.U.
3 HR - C-3 C.M.U.
2 HR - D-2 C.M.U.

M8b — MASONRY PARTITION: 8" LWCMU, UNO - EXTEND PARTITION TO ONE (1) COURSE ABOVE CEILING. BACKBRACE AS REQUIRED FOR STABILITY.

MASONRY GENERAL NOTES

1 ALL WALLS TO HAVE STANDARD JOINT REINFORCING 1-4 O.C. MAX.

2 REFER TO FRAME DETAILS ON ARCHITECTURAL DRAWINGS FOR ADDITIONAL DETAIL REQUIREMENTS.

3 REFER TO DIVISION 4 SPECIFICATION SECTIONS FOR ADDITIONAL REQUIREMENTS.

4 REFER TO DETAILS ON ARCHITECTURAL DETAIL DRAWINGS FOR ADDITIONAL DETAIL REQUIREMENTS.

5 REFER TO FINISH SCHEDULE FOR WALL FINISH.

6 ALL MASONRY PARTITIONS ARE 8" UNLESS NOTED OTHERWISE.

7 REFER TO STRUCTURAL DRAWINGS FOR REINFORCEMENT AND GROUT REQUIREMENTS.

COMPOSITE:

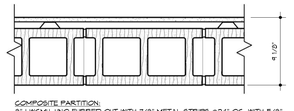

G5a — COMPOSITE PARTITION: 5" LWCMU, UNO FURRED OUT WITH 7/8" METAL STRIPS @24" OC, WITH 5/8" GYPSUM BOARD ON ONE SIDE. EXTEND LWCM, FURRING, AND GYPSUM TO DECK AND FILL VOIDS BETWEEN DECK AND BLOCK WITH SAFING INSULATION. FIRE RATED PARTITION - UL #U414 (3 HR)

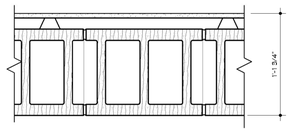

G12a — COMPOSITE PARTITION: 5" LWCMU, U.N.O. FURRED OUT WITH 1½" METAL STRIPS @24" OC, WITH 5/8" GYPSUM BOARD ON ONE SIDE. EXTEND LWCM, FURRING, AND GYPSUM TO DECK AND FILL VOIDS BETWEEN DECK AND BLOCK WITH SAFING INSULATION. FIRE RATED PARTITION - UL #U419 (3 HR)

GENERAL NOTES

1) GENERAL CONTRACTOR SHALL NOTIFY THE ARCHITECT OF ANY DISCREPANCIES BETWEEN SPECIFICATIONS AND DRAWINGS, BETWEEN MULTIPLE SPECIFICATION SECTIONS AND/OR BETWEEN MULTIPLE DRAWINGS. THE ARCHITECT WILL DETERMINE WHICH SHALL GOVERN.

2) GENERAL CONTRACTOR SHALL VERIFY ALL DIMENSIONS AND CONDITIONS OF THE JOB SITE INCLUDING UTILITIES AND EXISTING STRUCTURES PRIOR TO BEGINNING WORK AND REPORT ANY DISCREPANCIES TO THE ARCHITECT.

3) GENERAL CONTRACTOR SHALL BE RESPONSIBLE FOR STABILITY OF THE STRUCTURE DURING CONSTRUCTION INCLUDING ALL SHORING AND BRACING REQUIRED TO RESIST REQUIRED VERTICAL AND LATERAL FORCES.

4) ALL ARCHITECTURAL FLOOR PLAN DIMENSIONS ARE FROM FACE OF CONCRETE, MASONRY AND FINISHED DRYWALL.

5) MASONRY DIMENSIONS ARE NOMINAL UNLESS INDICATED OTHERWISE.

6) MASONRY PARTITIONS ARE TYPE M8a UNLESS INDICATED OTHERWISE.

7) ALL INTERIOR CONCRETE MASONRY PARTITIONS AND ALL MASONRY BACK-UP FOR EXTERIOR WALLS ARE LWCMU UNLESS NOTED OTHERWISE.

8) HORIZONTAL MASONRY DIMENSIONS FROM OUTSIDE TO OUTSIDE CORNERS ARE ACTUAL. WHEN DIMENSIONS ARE 2'-0" OR LESS, CONSTRUCT ONE JOINT LESS THAN DIMENSION SHOWN.

9) GYPSUM BOARD PARTITIONS ARE TYPE G5a UNLESS INDICATED OTHERWISE.

10) GENERAL CONTRACTOR SHALL PROVIDE 3½" HIGH CONCRETE CURBS AT ALL ELECTRICAL PANELS AND WHERE 2 OR MORE CONDUITS ARE EXPOSED AT THE FLOOR LINE.

11) MECHANICAL /ELECTRICAL CONTRACTOR SHALL SIZE AND GENERAL CONTRACTOR SHALL FORM, DOWEL AND POUR INTERIOR AND EXTERIOR BASES FOR MECHANICAL AND ELECTRICAL EQUIPMENT (3½" AT INTERIOR LOCATIONS AND 9½" AT EXTERIOR LOCATIONS UNLESS INDICATED OTHERWISE). REFER TO GENERAL PROVISIONS OF MECHANICAL SPECIFICATIONS FOR MINIMUM SIZES. UNLESS INDICATED OTHERWISE, REINFORCE WITH 4"x4" - W4.0xW4.0 WWF.

12) NO WALL FINISH OTHER THAN PAINT IS REQUIRED BEHIND CABINETS, CHALKBOARDS, TACKBOARDS, ETC UNLESS WALL BEHIND IS EXPOSED TO VIEW AND/OR WHERE NOTED OTHERWISE.

13) PROVIDE WALL BASE AT ALL CABINETS, SHELVING AND COLUMNS; AND AS SCHEDULED.

14) PROVIDE LINTELS (REF. STRUCTURAL AND MISC. LINTEL SCHEDULE) FOR ALL OPENINGS IN MASONRY WALLS FOR FIRE EXTINGUISHER CABINETS, LOUVERS, GRILLES, DOORS, ETC.

15) GROUT SMOOTH ALL CONCRETE COLUMNS AND WALLS PRIOR TO PAINTING. GROUT CONCRETE TO BE PAINTED WITH DRYWALL COMPOUND. CONCRETE COLUMNS AND WALLS SCHEDULED NOT TO BE PAINTED, GROUT WITH CEMENTITIOUS MATERIAL TO MATCH CONCRETE.

16) CONTINUE CONTROL JOINTS, INCLUDING SEALANTS, ABOVE CEILING ELEVATIONS FOR FULL HEIGHT OF WALL OR PARTITION.

17) CONSTRUCT ALL MASONRY PARTITIONS THAT EXTEND TO THE UNDERSIDE OF STRUCTURE WITH A ¾" CLEARANCE AROUND ALL STRUCTURE AND FILL VOIDS WITH SAFING INSULATION, UNLESS NOTED OTHERWISE.

18) PROVIDE 2x6 FIRE-RETARDANT TREATED BLOCKING IN GYPSUM BOARD PARTITIONS BEHIND CASEWORK; BLOCK AT TOP OF BASE UNITS, TOP & BOTTOM OF WALL UNITS, TOP AND MID-HEIGHT OF TALL UNITS. PROVIDE 2x6 FIRE-RETARDANT TREATED BLOCKING IN GYPSUM BOARD PARTITIONS BEHIND GRAB BARS, DOOR STOPS, WALL-MOUNTED SHELVING, WALL-MOUNTED TVS AND OTHER LOCATIONS AS SPECIFIED OR NOTED. CUT TO FIT SNUGLY BETWEEN STUDS & KERF AT STUD FLANGES TO FIT FIRMLY TO BACK OF DRYWALL.

19) REFER TO STRUCTURAL DRAWINGS AND SPECIFICATIONS FOR REINFORCING STEEL IN MASONRY WALLS AND POURED CONCRETE.

20) REFER TO CODE COMPLIANCE PLANS FOR FIRE RATINGS OF PARTITIONS AND SMOKE BARRIER LOCATIONS. GENERAL CONTRACTOR SHALL BE RESPONSIBLE FOR CONSTRUCTION OF PARTITIONS AND BARRIERS TO COMPLY WITH RATINGS INDICATED.

MATERIALS

- EARTH
- GRANULAR FILL / DRAINAGE MATERIAL
- CONCRETE (ELEVATION/SECTION)
- GROUT
- LIGHT WEIGHT OR NORMAL WEIGHT CONCRETE MASONRY UNIT AS NOTED
- INSULATION - FOUNDAITON
- INSULATION - WALL
- STEEL
- WOOD FRAMING OR BLOCKING
- FINISH WOOD
- PLYWOOD
- INSULATION - ROOF
- INSULATION - BATT
- GLASS (ELEVATION/SECTION)
- GYPSUM BOARD (ELEVATION/SECTION)
- DRAINAGE MATERIAL
- ACOUSTICAL CEILING PANEL OR TILE
- STONE (ELEVATION/SECTION)

KEYNOTES

Note: Keynotes are drawn from a master list & may not be sequentially numbered. Sizes (8x, 2x4) or other info. following keynote on drawings indicates criteria for those materials/locations which may differ from std. material specified.

033000	-1	Concrete Structure	081113	-1	Steel Door
	-2	Concrete Floor Slab		-2	Steel Frame
	-3	Vapor Barrier		-3	Frame Anchor
	-4	Welded Wire Fabric		-4	Louver
	-5	Steel Reinforcing Bar		-5	Master Guard
	-6	Rustication Joint		-6	FPE Door
	-7	Waterstop	081416	-1	Flush Wood Door
	-8	Dovetail Anchor	083113	-1	Access Door
	-9	Sidewalk		-2	Access Door Frame
	-10	Premolded Joint Filler		-3	Floor Access Door
035300	-1	Concrete Topping	083323	-1	Overhead Coiling Door
042000	-1	Face Brick		-2	Coiling Counter Door
	-2	Concrete Masonry Unit - Normal Weight (")	085613	-1	Sectional Overhead Door
	-3	Concrete Masonry Unit - Lightweight (")		-2	Sectional Overhead Door Track
	-4	Wire Reinforcing	084413	-1	Weatherstripping
	-5	Metal Tie/Anchor		-1	Aluminum Entrance Door
	-6	Through Wall Flashing		-2	Aluminum Entrance Frame
	-7	Control Joint Strip		-3	Sunshade
	-8	Bond Beam (")		-4	Aluminum Sunsill
	-9	Compressible Filler	084413	-1	Glazed Aluminum Curtain Wall
	-10	Cavity Mortar		-2	Threshold
	-11	Cavity Drainage Material		-3	Sunshade Louver
	-12	Termination Bar		-4	Aluminum Sunsill
044300	-1	Stone Masonry	087100	-1	Track Hardware
	-2	Anchor	088000	-1	Glazing (as scheduled)
	-3	Stone Jamb	088853	-1	Security Glazing (as scheduled)
	-4	Stone Sill			
	-5	Belt Course	089616	-1	Louvers and Vents
047200	-1	Cast Stone	092216	-1	Steel Stud (")
051200	-1	Steel Beams		-2	Steel Stud Runner (")
	-2	Steel Column		-3	Furring Channel (")
	-3	Steel Tube	092400	-1	Portland Cement Plastering
	-4	Steel Channel		-2	Metal Lath
052100	-1	Steel Joist		-3	Casing Bead
	-2	Joist - Extended End	092900	-1	Gypsum Board (")
	-3	Joist - Ceiling Extension		-2	Fire Rated Gypsum Board (")
053100	-1	Metal Decking		-3	Cementitious Tile Backer Panel
	-2	Composite Decking		-4	Metal Suspension System
	-3	Finished Galvanized Steel		-5	Acoustical Sealant
054000	-1	Structural Steel Studs		-6	Acoustical Insulation (")
	-2	Structural Steel Joists		-7	Metal Edge Trim
	-3	"Z" Closure		-8	Auxiliary Support Framing
055000	-1	Steel Angle		-9	Metal Control Joint
	-2	Steel Channel		-10	High Impact Gypsum Board
	-3	Steel Lintel		-11	Auxiliary Support Framing - Composite
	-4	Steel Pipe		-12	Stiffener
	-5	Steel Plate	093000	-1	Porcelain Mall Tile (" x ")
	-6	Steel Ladder		-2	Porcelain Wall Tile (" x ")
	-7	Steel Stairs		-3	Shower Pan
	-8	Steel Stair Stringer		-4	Shower Pan Flashing
	-9	Steel Embed Plate		-5	Porcelain Floor Tile (" x ")
	-10	Steel Bollard		-6	Tile Base
055123	-1	Steel Pipe Handrail		-7	Tile Cap
	-2	Steel Pipe Rail/Post		-8	Setting Bed
	-3	Steel Handrail Rail Bracket		-9	Uncoupling water-proof membrane
	-4	Steel Rod		-10	Shower Splashguard
055500	-1	Steel Grating		-11	Shower Niche
	-2	Steel Frame	095113	-1	Acoustical Panel (x) (F = Fire Rated)
057300	-1	Decorative Metal Railings		-2	Ceiling Suspension System
057500	-1	Ornamental Metal Stamped Grille		-3	Plywood (")
061063	-1	2x Wood Nailer (")	095115	-1	Acoustical Panel (x) (F = Fire Rated)
	-2	4x Wood Blocking (")		-2	Ceiling Suspension System
	-3	1x Wood Continuous (")		-3	Edge Mold Trim
	-4	Plywood (")		-4	Auxiliary Support Framing
	-5	930 Felt		-5	Resilient Tile Flooring
	-6	#15 Felt	096513	-1	Resilient Wall Base
	-7	Sheathing (")		-2	Resilient Stair Tread
064116	-1	Plastic Laminate Architectural		-3	Resilient Stair Riser
	-2	High Pressure Laminate		-4	Particle Board
	-3	Cabinet Liner Laminate		-5	Plywood
	-4	Particle Board		-6	Sub Floor
	-5	Plywood		-7	Solid Wood Moulding
	-6	Solid Wood Moulding		-8	Hardwood
	-7	Solid Wood Moulding		-9	Steel Tube/Leg Frame
	-8	Hardwood		-10	Door Hinge
	-9	Steel Tube/Leg Frame		-11	Door/Drawer Pull
	-10	Door Hinge		-12	Magnetic Catch
	-11	Door/Drawer Pull		-13	Drawer
	-12	Magnetic Catch		-14	Shelf Supports
	-13	Drawer		-15	Countertop
	-14	Shelf Supports		-16	Solid-Surfacing Material
	-15	Countertop			
	-16	Solid-Surfacing Material	097200	-1	Bituminous Dampproofing
				-2	Self-Adhering Sheet Waterproofing
071113	-1	Bituminous Dampproofing	102800	-1	Toilet Accessories
071326	-1	Self-Adhering Sheet Waterproofing		-2	Framed Mirror
				-3	Sanitary Napkin Disposer
072100	-1	Foundation Wall or under Slab Insulation (R-)		-4	Grab Bar
	-2	Cavity Wall Insulation (R-)		-5	Shower Seat
	-3	Building Insulation - Unfaced (R-)		-6	Shower Curtain Rod
	-4	Building Insulation - Faced (R-)	104413	-1	Fire Extinguisher Cabinet
	-5	Sill Sealer	104416	-1	Fire Extinguisher
	-6	Safing Insulation	105113	-1

GENERAL INFORMATION:

LOCATION: State of Kansas, Energy & Service Center, 7th & Van Buren St., Topeka, KS 66603
PHONE: 785.269.4693

OWNER INFORMATION: State of Kansas, 800 SW Jackson St. Suite 600, Topeka, KS 66612
REASON FOR SUBMITTAL: New Construction

RESPONDING FIRE DEPARTMENT: Topeka Fire Department
AUTHORITIES HAVING JURISDICTION: Kansas State Fire Marshal

PROJECT DESCRIPTION:

New energy & service center building housing capital complex boilers, chillers, Kansas highway patrol offices, carpentry, HVAC, boiler & electrical shops and offices, and central warehouse facilities.
DATE DEVELOPED: 01/02/15

REGISTERED DESIGN PROFESSIONALS:

HTK Architects, PA
900 S Kansas Ave. Suite 200
Topeka, KS 66612
785-266-5373
FAX: 785.266.5270

APPLICABLE CODES

State Law establishes a minimum Life Safety and has a uniform effect throughout the State. KSA 31-133 and KSA 2003 Sup. 31-134 require that all occupied structures conform to the basic life safety requirements. Most buildings, new or existing, have one or more deviations from one of the recognized building codes. State Law can be summarized as:
A) Existing occupied buildings cannot have hazardous conditions which slow speedy exits.
B) Alteration of existing buildings cannot make existing conditions worse or block exits.
C) New construction and changes in use are subject to greater life safety requirements.
Local Building Inspector: State of Kansas

2012- International Building Code
2012- Uniform Mechanical Code
2012- Uniform Plumbing Code
2012- International Fuel Gas Code
2012- International Energy Code
NFPA 10- 2007
NFPA 13- 2007
NFPA 14- 2007
NFPA 25- 2008
2012- International Fire Code
Kansas Fire Prevention Code
2010- ADA/ABA
Kansas State Boiler Code KSA 44-913
NFPA 72- 2007
NFPA 101- 2006
NFPA 110- 2005
NFPA 70- 2008 (NEC)

OCCUPANCY (Section 303), CLASSIFICATION AND AREA

OVERALL BUILDING: New Construction

OCCUPANCY: B, S-1, A-2 (crew room), F-1 (shops), Non-Separated Occ. Per 508.3.2
CONSTRUCTION TYPE: II - B
BUILDING AREA:
ALLOWABLE - 9,500 SF PER FLOOR
FRONTAGE If = 92.4%
SPRINKLER SYSTEM Is = 200%
ALLOWABLE AREA WITH INCREASES

*Allowable Area Calculation
A-2 Occ. Most Restrictive= 9,500 SF
Aa= 9,500 SF + {[9,500 x 92.4%] + [9,500 x 200%]}
Aa= 9,500 SF + {[8,778 + 19,000]}
Aa= 9,500 SF + 9,500 + 27,778
Aa= 37,278 SF Allowable Area Per Floor

ACTUAL - 1st Floor: 20,379 SF
B : 14,792 SF
S-1: 1,944 SF
A-2: 0 SF
F-1: 3,643 SF

ACTUAL - 2nd Floor: 10,948 SF
B : 6,367 SF
S-1: 1,977 SF
A-2: 1,116 SF

BUILDING HEIGHT:
ALLOWABLE HEIGHT (STORIES/FT.) = 2/55 FT
ACTUAL HEIGHT = 2/36 FT
ALLOWABLE: 2 STORIES ... ACTUAL 2 STORY

GENERAL BUILDING LIMITATIONS:

Construction Type II-B Structural Fire Ratings	Table 601
Structural frame including columns, girders & trusses:	0 HR
Bearing exterior walls:	0 HR
Bearing interior walls:	0 HR
Nonbearing exterior walls & partitions (Separation > 30 feet):	0 HR
Nonbearing interior walls & partitions:	0 HR
Floor construction including supporting beams & joists:	0 HR
Roof construction including supporting beams & joists:	0 HR

Storage Over 100 SF:	AUTOMATIC FIRE SUPRESSION SYSTEM, RESIST PASSAGE OF SMOKE, SELF CLOSING DOORS
Fireproofing:	NOT REQUIRED
Protected Exit Path:	REQUIRED, PROVIDED @ 1 LEVEL, VEST 101

PLUMBING FIXTURE COUNT:

PLUMBING FIXTURES FOR ASSEMBLY. BASED ON IBC METHOD. PROVIDED PER TABLE 2902.1 OF THE 2006 IPC. ASSUMING 50% MALE AND 50% FEMALE.

A2 (Crew Room) ASSEMBLY OCCUPANTS: **99** OCCUPANTS
Men's Water Closets 1:75 — Women's Water Closets 1:75
Men's and Women's Lavatories: 1:200 — Drinking Fountains 1:500

Men's WCs	Women's WCs	Men's Lavatories	Women's Lavatories	Urinals No more than 67%	Drinking Fountain	Service Sink
50/75	50/75	50/200	50/200	than 67%	99/500	
1	**1**	**1**	**1**	**0**	**0.2**	**1**

B BUSINESS: **111** OCCUPANTS
Men's Water Closets: 1:25 for first 50 and 1:50 for remaining
Women's Water Closets: 1:25 for first 50 and 1:50 for remaining
Men's Lavatories: 1:40 — Women's Lavatories: 1:40 for first 80 1:80 for remaining
Drinking Fountains 1:100

Men's WCs	Women's WCs	Men's Lavatories	Women's Lavatories	Urinals No more than 67%	Drinking Fountain	Service Sink
50/25+6/50	457/40	50/40	50/40	than 67%	111/100	
3	**3**	**2**	**2**	**2**	**1.11**	**1**

F-1 INDUSTRIAL: **21** OCCUPANTS
Men's Water Closets 1:50 — Women's Water Closets 1:50
Men's and Women's Lavatories 1:50 — Drinking Fountains 1:100

Men's WCs	Women's WCs	Men's Lavatories	Women's Lavatories	Urinals No more than 67%	Drinking Fountain	Service Sink
11/100	11/100	11/100	11/100	than 67%	21/400	
1	**1**	**1**	**1**	**0**	**0.05**	**1**

S-1 STORAGE: **9** OCCUPANTS

Men's WCs	Women's WCs	Men's Lavatories	Women's Lavatories	Urinals	Drinking Fountain	Service Sink
5/100	5/100	5/100	5/100		1/1000	
1	**1**	**1**	**1**	**0**	**0.009**	**1**

Unisex WCs	Unisex Lavatories	Unisex Showers
1	**1**	**1**

PLUMBING FIXTURES PROVIDED:

Men's WCs	Women's WCs	Men's Lavatories	Women's Lavatories	Urinals No more than 67%	Drinking Fountain	Service Sink
4	**6**	**6**	**6**	**4**	**2**	**2**

CODE SYMBOL LEGEND

SYMBOL	DESCRIPTION	PROTECTIVE ELEMENTS
	EXIT- EXTERIOR	
	EXIT- INTERIOR (Assembly occ. over 50 and exits from floors.)	
FEC	FIRE EXTINGUISHER	SHOW 75' RADIUS
	EXIT PATH	
FDSC	FIRE DEPARTMENT CONNECTION	
	STANDPIPE	
	FIRE EXTINGUISHER SPACING (Show 75' Radius)	Show Radius
P P	LIMITED PROTECTION EXIT PATH	Sprinkled and Automatic Smoke Detection Throughout Exit Path. Non-rated smoke partitions. self or automatic closing doors to limit passage of smoke.
	PROTECTED EXIT PATH	1 HR Fire Rated Partion wall Construction. 1 hr rated door and fire shutter assembly. Fire & Smoke Dampers.
	1 HOUR FIRE WALL (Occupancy and Incidental Use Areas)	1 hour Fire wall construction. 45 min. rated door / 60 min. @ shafts assembly. Fire Dampers.
	2 HOUR FIRE WALL (Building Separation)	2 hour Fire Wall construction. 1 1/2 hour rated door assembly. Fire Dampers.
198/39.6" 68"	ACCUMULATED EXIT WIDTH AT REQUIRED EXIT (clear width)	Occupants/Required width / Provided Width
	PUBLIC FIRE HYDRANT (show distance from building)	
	FIRE HYDRANY HOSE LINE (400' Line)	
CLASROOM 800 SF E: 40 OCC	ROOM DESIGNATION	Room Type / Square Footage of Usable Space / Occupancy Type (E Unless Noted Otherwise): Maximum Allowable Occupants
40 40 80	SHOW ACCUMULATED OCCUPANT LOADS FOR COMPLEX EXIT PATHS	
FACP	FIRE ACCESS CONTROL PANEL	
	1 HOUR SHAFT	1-HR Fire Barrier Wall Construction. 1-HR Door Assembly, Fire/Smoke Dampers.
	SPRINKLED INCIDENTAL USE AREA	Wall construction to resist the passage of smoke from floor to floor. F.R. Floor/Ceiling assembly, self- or automatic closing doors with no air transfer grilles.

NOTES -
1. The entire building will be sprinklered.
2. Future additions are not possible.
3. Water Supply Requirements: 225 gallons per minute, 50 psf pressure

ACTIVE LIFE SAFETY SYSTEMS:

Fire Sprinklers:	Provided
Fire Alarm:	Manual & Smoke Detection - Audible/Visual Devices
Exit Signs:	At All Exits and Exits Paths as Needed
Emergency Lights:	Throughout Exit Paths/Generator

PASSIVE LIFE SAFETY SYSTEMS:

Corridor Ratings:	NOT REQUIRED
Limited Protection Egress Path:	REQUIRED, PROVIDED
Stairwells:	REQUIRED, PROVIDED
Shafts:	REQUIRED, PROVIDED
Occupancy Separations:	NOT REQUIRED
Area Separation Walls:	NOT REQUIRED

HTK ARCHITECTS PA — 900 S. KANSAS AVE., SUITE 200, TOPEKA KANSAS 66112, P 785.266.5373 — 9300 W 110TH ST. STE. 150, OVERLAND PARK, KANSAS 66210, P 913.663.5373 — www.htkarchitects.com
DATE: 4-15-15
HTK Project Number: 1410.03
Department of Administration, Office of Facilities & Property Management, Landon State Office Building, 800 SW Jackson, Suite 700, Topeka, Kansas 66612-1216, Phone: 785-296-8899, Fax: 785-296-8898
STATE OF KANSAS ENERGY & SERVICE CENTER
HTK Architects, 221 SW 7th Street
SHEET CONTENTS: CFP INFO SHEET
DFM Project Number: A- 012651
SHEET NUMBER: CF01

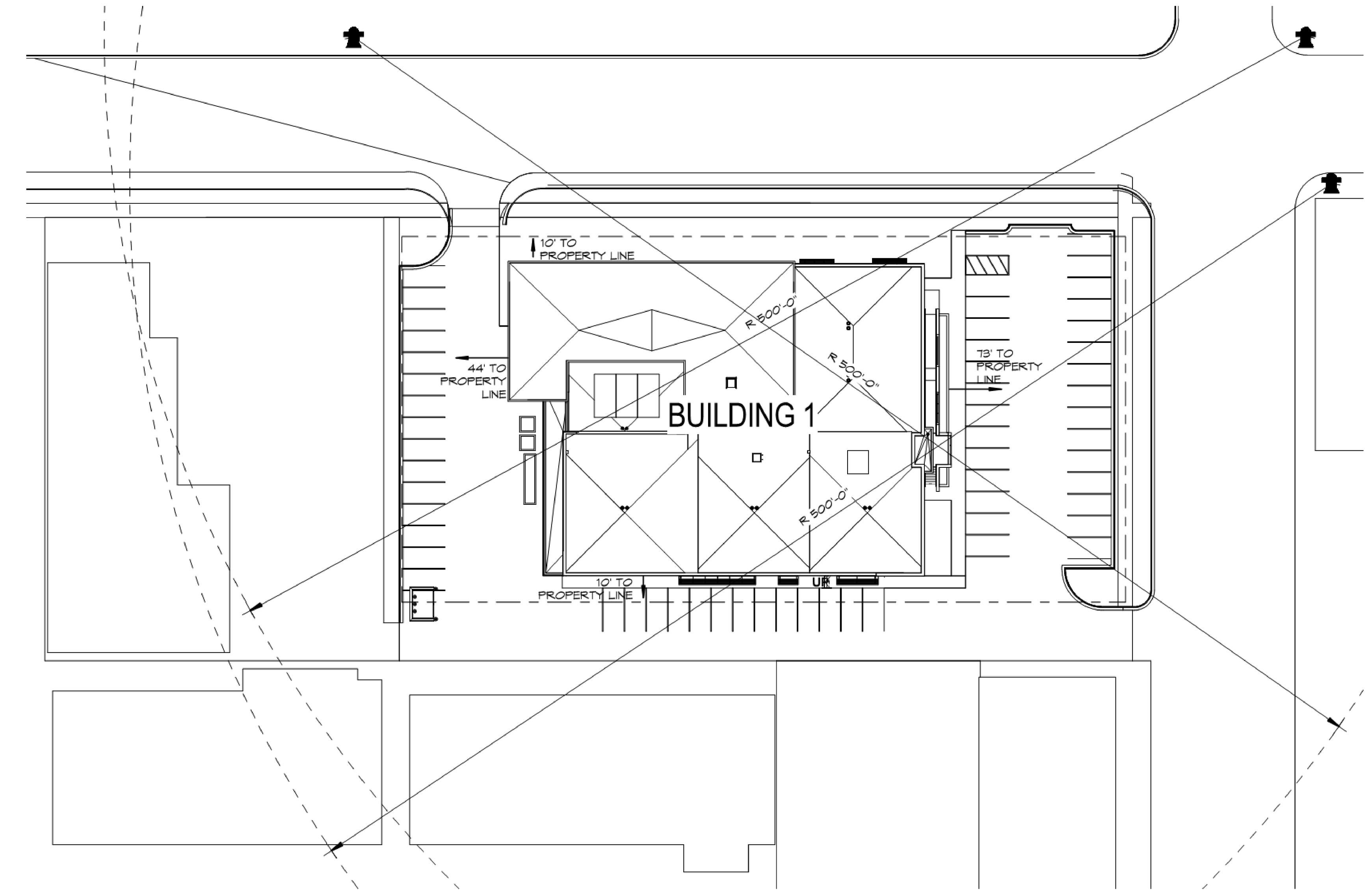

1 CODE SITE PLAN
1" = 40'-0"

DATE: 3-17-15
HTK Project Number: 1410.03
STATE OF KANSAS ENERGY & SERVICE CENTER
HTK Architects, Seventh & Van Buren Street, Topeka, Kansas
SHEET CONTENTS: CODE SITE PLAN
DFM Project Number: A- 012651
SHEET NUMBER: CF02

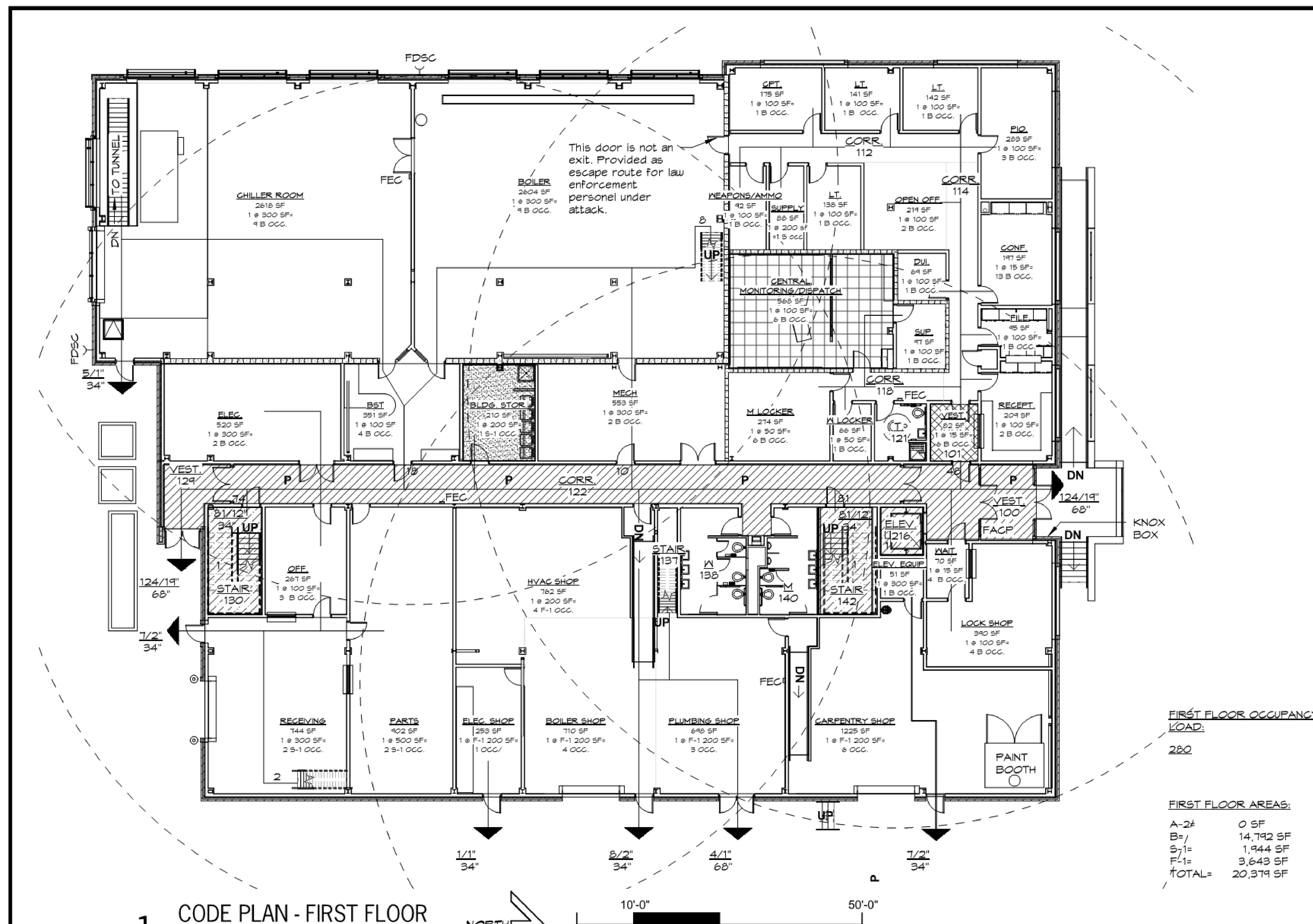

1 CODE PLAN - FIRST FLOOR
1/16" = 1'-0"

FIRST FLOOR OCCUPANCY LOAD:
280

FIRST FLOOR AREAS:
A-2= 0 SF
B= 14,792 SF
S-1= 1,944 SF
F-1= 3,643 SF
TOTAL= 20,379 SF

DATE: 3-17-15
HTK Project Number: 1410.03
STATE OF KANSAS ENERGY & SERVICE CENTER
HTK Architects, Seventh & Van Buren Street, Topeka, Kansas
SHEET CONTENTS: CFP FIRST FLOOR
DFM Project Number: A- 012651
SHEET NUMBER: CF03

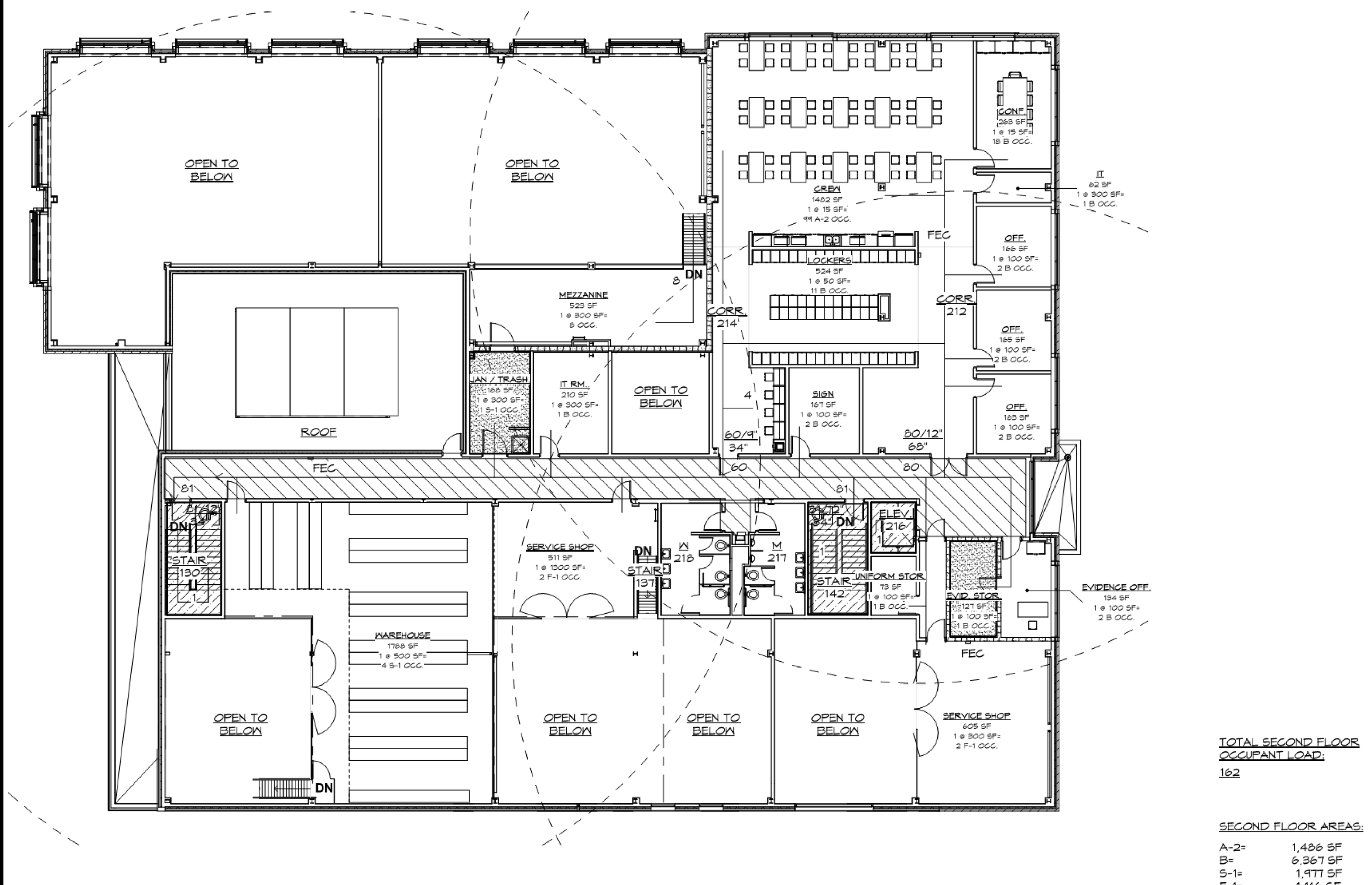

1 CODE PLAN - SECOND FLOOR
1/16" = 1'-0"

TOTAL SECOND FLOOR OCCUPANT LOAD:
162

SECOND FLOOR AREAS:
A-2= 1,486 SF
B= 6,367 SF
S-1= 1,977 SF
F-1= 1,116 SF
TOTAL= 10,946 SF

DATE: 3-17-15
HTK Project Number: 1410.03
STATE OF KANSAS ENERGY & SERVICE CENTER
HTK Architects, Seventh & Van Buren Street, Topeka, Kansas
SHEET CONTENTS: CFP SECOND FLOOR
DFM Project Number: A- 012651
SHEET NUMBER: CF04

HTK ARCHITECTS PA
900 S. KANSAS AVE., SUITE 200, TOPEKA KANSAS 66112, P 785.266.5373
9300 W 110TH ST. STE. 150, OVERLAND PARK, KANSAS 66210, P 913.663.5373
www.htkarchitects.com

R. KEITH BLACKBURN, LICENSED 3435, 4-15-15, KANSAS, PROFESSIONAL ARCHITECT
DENNIS A. HAUGH, LICENSED 2567, 4-15-15, KANSAS, PROFESSIONAL ARCHITECT

DATE:
- 4-15-15

REVISED DATE:
- 12-18-14
- 2-9-15
- 3-10-15

HTK PROJECT NUMBER:
- 1410.03

Department of Administration
Office of Facilities and Procurement Management
800 SW Jackson, Suite 700
Topeka, Kansas 66612-1216
Phone 785-296-8899
FAX 785-296-3456

STATE OF KANSAS
STATE OF KANSAS ENERGY & SERVICE CENTER
221 SW 7th Street
BUILDING NUMBER 17300-0038

DATE: 4-15-15 DRAWN BY: Author CHECKED BY: Checker REV:

CODE FOOTPRINTS

A-012651

G301

CONSTRUCTION DOCUMENTS

4/16/2015 11:13:20 AM C:\Users\jms\Documents\REVIT\State of Kansas Energy_Central_jms.rvt

JCSBC
2-2-2016
Att.9G.--0003

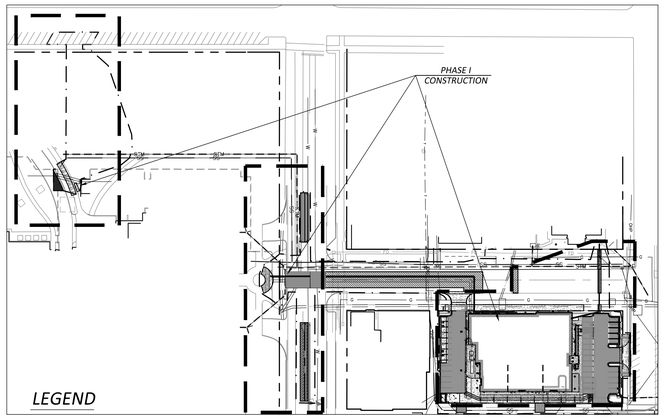

PHASING NOTES:

PHASE IA: *PHASE IA - CLOSE THE MIDDLE LANES OF SW 8TH AVE. DEMOLISH THE EXISTING MEDIAN ISLANDS AND CONSTRUCT TEMPORARY 6" ASPHALTIC CONCRETE PAVEMENT FLUSH WITH THE EXISTING PAVEMENT. CROWN IN MIDDLE TO DRAIN TO NORTH AND SOUTH.*

PHASE IB: *CLOSE THE NORTH INTERNAL ACCESS ROAD TO TRAFFIC AT THE EAST AND WEST ENTRANCES. COMPLETE DEMOLITION AS NOTED AND/OR AS NECESSARY AND CONSTRUCT 7'X5' CONCRETE TUNNEL FROM STA. 19+99.00 TO STA. 20+37.84 BETWEEN THE EXISTING PARKING GARAGE AND NORTHWEST VAULT OF CAPITOL BUILDING.*

CLOSE SOUTH THREE LANE WIDTHS OF SW 8TH AVE. TO THROUGH TRAFFIC. MAINTAIN ONE LANE OF TRAFFIC IN EACH DIRECTION ON SW 8TH AVE. ALONG NORTH SIDE. CLOSE CUT-BACK PARKING STALLS ALONG NORTH SIDE OF SW 8TH AVE. BETWEEN SW JACKSON ST. AND SW HARRISON ST. COMPLETE DEMOLITION AS NOTED AND/OR AS NECESSARY AND CONSTRUCT 7'X7' CONCRETE TUNNEL FROM STATION 1+00.00 TO STA. 1+65.00.

COMPLETE DEMOLITION AS NOTED AND/OR AS NECESSARY OF EXISTING RAISED MEDIAN ISLANDS WITHIN SW 8TH AVE. TO EAST AND WEST OF TUNNEL (APPROX. STA. 1+55.34, LT AND RT) AND CONSTRUCT 10" ASPHALTIC CONCRETE PAVEMENT. MATCH CROSS SLOPE OF EXISTING PAVEMENT TO EAST AND WEST OF THE ISLANDS.

COMPLETE DEMOLITION AS NOTED AND/OR AS NECESSARY OF PROPOSED BUILDING SITE AND CONSTRUCT PROPOSED BUILDING AND SITE IMPROVEMENTS.

CLOSE SW VAN BUREN ST. TO THE NORTH OF THE COMMERCIAL ENTRANCE TO THE SOUTH OF THE EISENHOWER BUILDING AT 7TH & VAN BUREN FOR WATER AND FIBER OPTIC UTILITY INSTALLATIONS. COMPLETE DEMOLITION AND CONSTRUCT WATER FIRE LINE, DOMESTIC WATER SERVICE LINE AND FIBER OPTIC CONDUITS UNDER SW VAN BUREN AVE. FROM WEST TO EAST. BACKFILL TRENCH AND PROVIDE TEMPORARY CRUSHED ROCK SURFACING TO MATCH EXISTING GRADE.

MAINTAIN ACCESS TO EXISTING BUSINESS ON WEST SIDE OF VAN BUREN FROM 8TH AVE. CLOSURE OF VAN BUREN FROM NORTH SHALL BE FOR NO MORE THAN 1 WEEK AND SHALL NOT COINCIDE WITH PHASE II CONSTRUCTION.

GENERAL NOTES:

1. *ALL CONSTRUCTION METHODS AND MATERIALS USED IN THE CONSTRUCTION OF THE IMPROVEMENTS COVERED BY THESE PLANS SHALL BE IN ACCORDANCE WITH THE KANSAS DEPARTMENT OF TRANSPORTATION "STANDARD SPECIFICATIONS FOR STATE ROAD & BRIDGE CONSTRUCTION", LATEST EDITION AND SPECIAL PROVISIONS, SUPPLEMENTED WITH THE SPECIFICATIONS NOTED ON THIS SHEET AND ALL APPLICABLE CITY CODES, ORDINANCES AND STANDARD TECHNICAL DESIGN AND DRAWING DETAILS ON FILE AT THE CITY OF TOPEKA, KANSAS.*
2. *THE LOCATION OF ALL OVERHEAD AND UNDERGROUND UTILITIES MAY VARY FROM WHAT IS INDICATED IN THESE PLANS. IT SHALL BE THE CONTRACTOR'S RESPONSIBILITY TO COORDINATE WITH THE UTILITY OWNER TO LOCATE AND FLAG ALL UNDERGROUND UTILITIES WHETHER INDICATED OR NOT. NO EXCAVATION WILL BE PERMITTED IN THE AREA OF UNDERGROUND UTILITIES UNTIL ALL SUCH UTILITIES HAVE BEEN LOCATED AND IDENTIFIED TO THE SATISFACTION OF ALL PARTIES AND THEN ONLY WITH EXTREME CARE TO AVOID ANY POSSIBILITY OF DAMAGE TO THE UTILITY.*
3. *THE CONTRACTOR IS RESPONSIBLE FOR ANY AND ALL PERMITTING AND FEES THROUGH THE CITY OF TOPEKA DEVELOPMENT SERVICES DEPARTMENT.*
4. *REMOVAL LIMITS FOR CONCRETE CURB & GUTTER, STONE CURB AND SIDEWALK ARE APPROXIMATE. THE CONTRACTOR SHALL REMOVE THESE ITEMS TO THE NEAREST JOINT AND TO THE MINIMAL EXTENTS NECESSARY FOR SAFE AND SATISFACTORY CONSTRUCTION OF THE CONCRETE TUNNEL.*
5. *THE STONE CURB SHALL BE SALVAGED AND STORED FOR RE-INSTALLATION. ANY STONE CURB THAT IS DAMAGED DURING REMOVAL SHALL BE REPLACED WITH LIKE MATERIALS AND DIMENSIONS. IT IS THE CONTRACTOR'S RESPONSIBILITY TO EVALUATE CONDITION OF EXISTING CURB PRIOR TO THE BID AND INCLUDE ALL COSTS ASSOCIATED WITH THE REMOVAL, STORAGE, REPLACEMENT AND RE-INSTALLATION OF THE CURB IN THE BID.*
6. *ALL BRICKS REMOVED FROM SW VAN BUREN ST. SHALL BE SALVAGE TO THE CITY OF TOPEKA STREET MAINTENANCE DIVISION. THE CONTRACTOR SHALL COORDINATE WITH THE STREET MAINTENANCE DIVISION FOR REMOVAL FROM THE SITE.*
7. *THE CONTRACTOR SHALL PROTECT THE EXISTNG UTILITY DUCTBANKS, CONDUITS AND PIPES FROM BEING DAMAGED DURING CONSTRUCTION. ANY DIRECT AND/OR INCIDENTAL DAMAGES CAUSED BY CONSTRUCTION ACTIVITIES SHALL BE PAID FOR BY THE CONTRACTOR.*
8. *THE CONTRACTOR SHALL ADEQUATELY AND FULLY SUPPORT ALL EXISTING UTILITIES CROSSING THE CONSTRUCTION AREA. THE CONTRACTOR SHALL COMPLY WITH ALL REQUIREMENTS OF THE UTILITY OWNERS AND SHALL GAIN APPROVAL OF PROPOSED SUPPORT SYSTEM PRIOR TO BEGINNING CONSTRUCTION.*
9. *THE PROPOSED LOCATION OF ACCESS OFF OF SW HARRISON ST. FOR CONSTRUCTION OF THE TUNNEL SECTION BETWEEN THE NW VAULT AND PARKING GARAGE IS APPROXIMATE. THE CONTRACTOR SHALL ADJUST TO MISS TREES AND SPRINKLER HEADS WITHIN THE GRASSED AREA. THE CONTRACTOR SHALL COORDINATE WITH THE OWNER FOR SPRINKLER HEAD LOCATIONS AND OTHER ITEMS TO BE PROTECTED WITHIN THIS AREA.*

GENERAL NOTES:

10. *THE CONTRACTOR SHALL COORDINATE THE TEMPORARY CLOSURE OF EXISTING PARKING METERS ALONG SW HARRISON FOR THE CONSTRUCTION ENTRANCE.*
11. *THE CONTRACTOR SHALL REMOVE THE GRAVEL FROM THE STATEHOUSE LAWN IMMEDIATELY UPON COMPLETION OF THE 7'X5' TUNNEL SECTION. THE DISTURBED AREA SHALL BE RE-GRADED, A MINIMUM OF 6" OF TOPSOIL SHALL BE PLACED AND NEW SOD INSTALLED.*
12. *ANY SIDEWALK, CURB, GUTTER, LANDSCAPING, TREES, SPRINKLER HEADS OR PAVEMENT THAT IS DAMAGED DUE TO CONSTRUCTION ACTIVITIES SHALL BE REMOVED AND REPLACED AT THE CONTRACTOR'S EXPENSE.*
13. *THE CONTRACTOR SHALL PROVIDE ADEQUATE CONSTRUCTION FENCING AND PROTECTION OF THE PROJECT SITE TO PROMOTE THE SAFETY AND SECURITY OF THE CONSTRUCTION FORCES AS WELL AS THE PUBLIC. THIS INCLUDES PROTECTION FOR VEHICULAR, PEDESTRIAN AND OTHER MODES OF TRANSIT.*

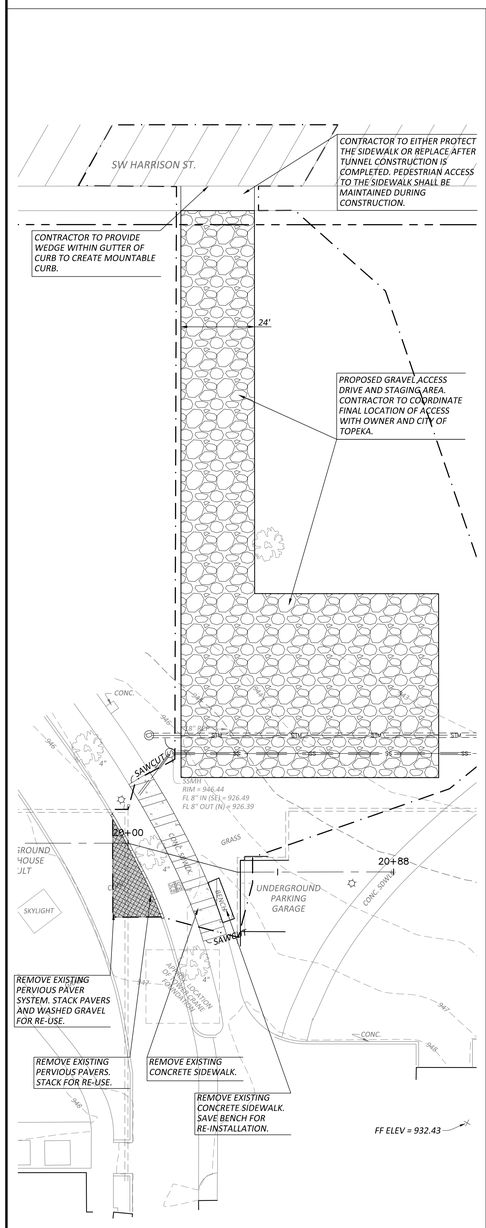

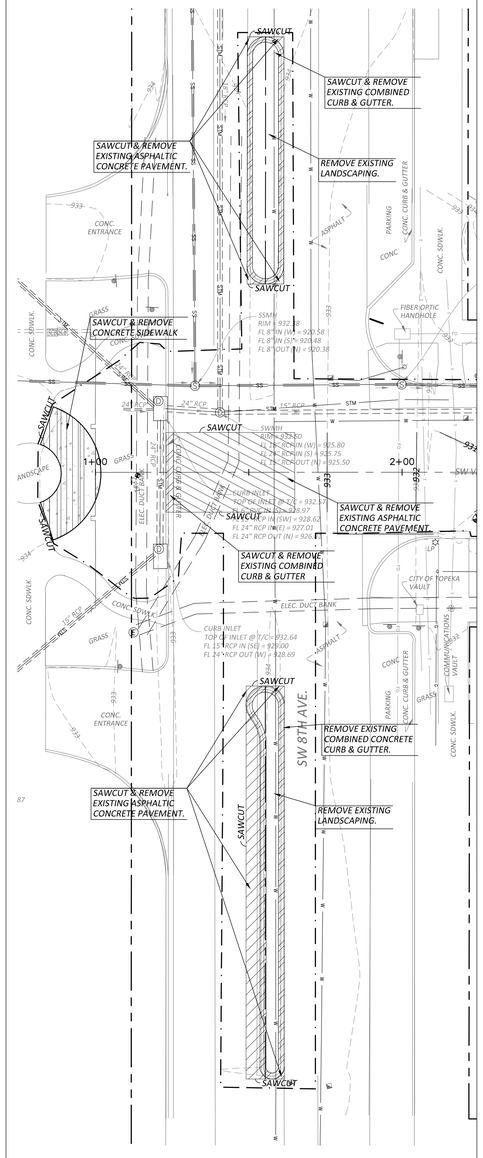

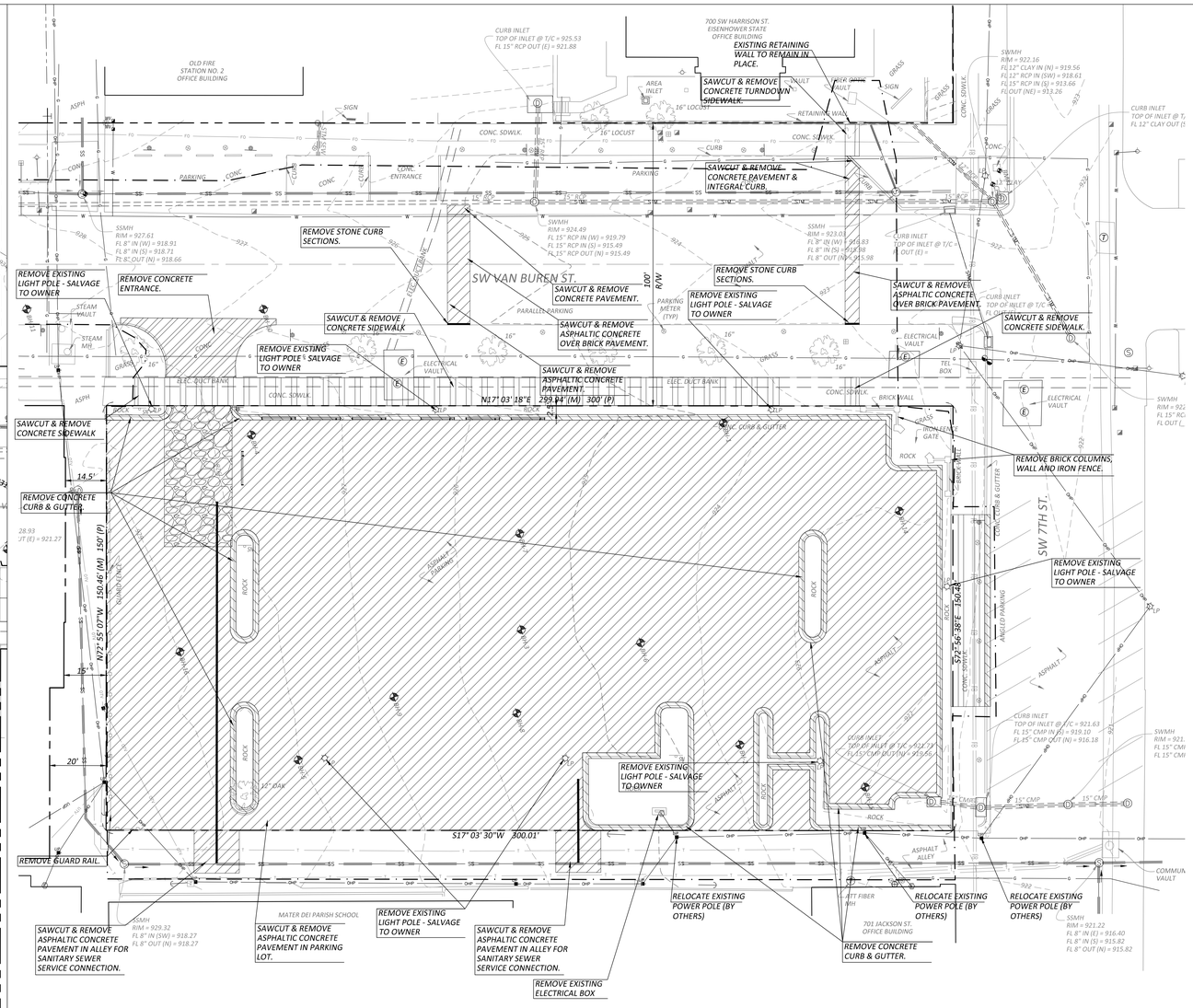



HTK ARCHITECTS PA
900 S. KANSAS AVE. TOPEKA, KANSAS 66612 P. 785-266-3272
9300 W. 110TH ST. STE. 150 OVERLAND PARK, KANSAS 66210 P. 913-663-3272
WWW.HTKARCHITECTS.NET

KEVIN W. BECK LICENSED PROFESSIONAL ENGINEER 16259 4-15-15 KANSAS

SBB Schmidt, Beck & Boyd Engineering / Surveying
1415 SW Topeka Blvd.
Topeka, KS 66612
Ph: (785) 215-8630

DATE:
- 4-15-15

REVISED DATE:
-
-
-
-

HTK PROJECT NUMBER:
- 1410.03

Department of Administration
Office of Facilities and
Procurement Management
800 SW Jackson, Suite 700
Topeka, Kansas 66612-1216
Phone 785-296-8899
FAX 785-296-3456

STATE OF KANSAS
STATE OF KANSAS ENERGY & SERVICE CENTER
Seventh & Van Buren Street, Topeka, Kansas
BUILDING NUMBER 17300-00038
DATE: 4-15-15 DRAWN BY: Author CHECKED BY: Checker REV:

DEMOLITION & CONSTRUCTION PHASING PLAN - PHASE IA & IB

A-012651

C050

CONSTRUCTION DOCUMENTS

JCSBC
2-2-2016
Att.9G.--0004

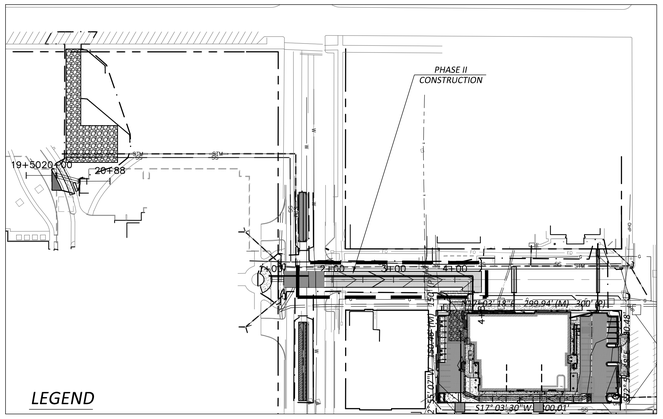

PHASING NOTES:

PHASE II: *OPEN THE SOUTH TWO LANES OF SW 8TH AVE. AND PROVIDE ONE LANE TRAFFIC IN EACH DIRECTION OF SW 8TH AVE. CLOSE NORTH THREE LANES OF SW 8TH AVE. AND SW VAN BUREN ST. TO NORTH OF 8TH AVE. CONSTRUCT 7'X7' CONCRETE TUNNEL FROM STA. 1+65.00 TO STA. 4+81.33. CONNECT TO BUILDING FOUNDATION.*

MAINTAIN ACCESS TO EXISTING BUSINESS ON WEST SIDE OF VAN BUREN FROM 7TH ST.

PAINT OVER PARKING STRIPES WITHIN SW 7TH ST. THAT WILL BE REMOVED FOR NEW ENTRANCE FOR SITE DEVELOPMENT. COORDINATE PARKING METER REMOVAL WITH THE CITY OF TOPEKA.

SEE TRAFFIC CONTROL FOR PHASE II ON SHEET C401.

GENERAL NOTES:

1. *ALL CONSTRUCTION METHODS AND MATERIALS USED IN THE CONSTRUCTION OF THE IMPROVEMENTS COVERED BY THESE PLANS SHALL BE IN ACCORDANCE WITH THE KANSAS DEPARTMENT OF TRANSPORTATION "STANDARD SPECIFICATIONS FOR STATE ROAD & BRIDGE CONSTRUCTION", LATEST EDITION AND SPECIAL PROVISIONS, SUPPLEMENTED WITH THE SPECIFICATIONS NOTED ON THIS SHEET AND ALL APPLICABLE CITY CODES, ORDINANCES AND STANDARD TECHNICAL DESIGN AND DRAWING DETAILS ON FILE AT THE CITY OF TOPEKA, KANSAS.*
2. *THE LOCATION OF ALL OVERHEAD AND UNDERGROUND UTILITIES MAY VARY FROM WHAT IS INDICATED IN THESE PLANS. IT SHALL BE THE CONTRACTOR'S RESPONSIBILITY TO COORDINATE WITH THE UTILITY OWNER TO LOCATE AND FLAG ALL UNDERGROUND UTILITIES WHETHER INDICATED OR NOT. NO EXCAVATION WILL BE PERMITTED IN THE AREA OF UNDERGROUND UTILITIES UNTIL ALL SUCH UTILITIES HAVE BEEN LOCATED AND IDENTIFIED TO THE SATISFACTION OF ALL PARTIES AND THEN ONLY WITH EXTREME CARE TO AVOID ANY POSSIBILITY OF DAMAGE TO THE UTILITY.*
3. *THE CONTRACTOR IS RESPONSIBLE FOR ANY AND ALL PERMITTING AND FEES THROUGH THE CITY OF TOPEKA DEVELOPMENT SERVICES DEPARTMENT.*
4. *REMOVAL LIMITS FOR CONCRETE CURB & GUTTER, STONE CURB AND SIDEWALK ARE APPROXIMATE. THE CONTRACTOR SHALL REMOVE THESE ITEMS TO THE NEAREST JOINT AND TO THE MINIMAL EXTENTS NECESSARY FOR SAFE AND SATISFACTORY CONSTRUCTION OF THE CONCRETE TUNNEL.*
5. *THE STONE CURB SHALL BE SALVAGED AND STORED FOR RE-INSTALLATION. ANY STONE CURB THAT IS DAMAGED DURING REMOVAL SHALL BE REPLACED WITH LIKE MATERIALS AND DIMENSIONS. IT IS THE CONTRACTOR'S RESPONSIBILITY TO EVALUATE CONDITION OF EXISTING CURB PRIOR TO THE BID AND INCLUDE ALL COSTS ASSOCIATED WITH THE REMOVAL, STORAGE, REPLACEMENT AND RE-INSTALLATION OF THE CURB IN THE BID.*
6. *ALL BRICKS REMOVED FROM SW VAN BUREN ST. SHALL BE SALVAGE TO THE CITY OF TOPEKA STREET MAINTENANCE DIVISION. THE CONTRACTOR SHALL COORDINATE WITH THE STREET MAINTENANCE DIVISION FOR REMOVAL FROM THE SITE.*
7. *THE CONTRACTOR SHALL PROTECT THE EXISTNG UTILITY DUCTBANKS, CONDUITS AND PIPES FROM BEING DAMAGED DURING CONSTRUCTION. ANY DIRECT AND/OR INCIDENTAL DAMAGES CAUSED BY CONSTRUCTION ACTIVITIES SHALL BE PAID FOR BY THE CONTRACTOR.*
8. *THE CONTRACTOR SHALL ADEQUATELY AND FULLY SUPPORT ALL EXISTING UTILITIES CROSSING THE CONSTRUCTION AREA. THE CONTRACTOR SHALL COMPLY WITH ALL REQUIREMENTS OF THE UTILITY OWNERS AND SHALL GAIN APPROVAL OF PROPOSED SUPPORT SYSTEM PRIOR TO BEGINNING CONSTRUCTION.*
9. *THE PROPOSED LOCATION OF ACCESS OFF OF SW HARRISON ST. FOR CONSTRUCTION OF THE TUNNEL SECTION BETWEEN THE NW VAULT AND PARKING GARAGE IS APPROXIMATE. THE CONTRACTOR SHALL ADJUST TO MISS TREES AND SPRINKLER HEADS WITHIN THE GRASSED AREA. THE CONTRACTOR SHALL COORDINATE WITH THE OWNER FOR SPRINKLER HEAD LOCATIONS AND OTHER ITEMS TO BE PROTECTED WITHIN THIS AREA.*

GENERAL NOTES:

10. *THE CONTRACTOR SHALL COORDINATE THE BAGGING OF EXISTING PARKING METERS ALONG SW HARRISON FOR THE CONSTRUCTION ENTRANCE.*
11. *THE CONTRACTOR SHALL REMOVE THE GRAVEL FROM THE STATEHOUSE LAWN IMMEDIATELY UPON COMPLETION OF THE 7'X5' TUNNEL SECTION. THE DISTURBED AREA SHALL BE RE-GRADED, A MINIMUM OF 6" OF TOPSOIL SHALL BE PLACED AND NEW SOD INSTALLED.*
12. *ANY SIDEWALK, CURB, GUTTER, LANDSCAPING, TREES, SPRINKLER HEADS OR PAVEMENT THAT IS DAMAGED DUE TO CONSTRUCTION ACTIVITIES SHALL BE REMOVED AND REPLACED AT THE CONTRACTOR'S EXPENSE.*
13. *REMOVAL LIMITS FOR CURB, CURB & GUTTER AND SIDEWALK ARE APPROXIMATE. THE CONTRACTOR SHALL REMOVE THESE ITEMS TO THE NEAREST JOINT AND TO THE MINIMAL EXTENTS NECESSARY FOR SAFE AND SATISFACTORY CONSTRUCTION OF THE CONCRETE TUNNEL.*
14. *THE CONTRACTOR SHALL PROVIDE ADEQUATE CONSTRUCTION FENCING AND PROTECTION OF THE PROJECT SITE TO PROMOTE THE SAFETY AND SECURITY OF THE CONSTRUCTION FORCES AS WELL AS THE PUBLIC. THIS INCLUDES PROTECTION FOR VEHICULAR, PEDESTRIAN AND OTHER MODES OF TRANSIT.*

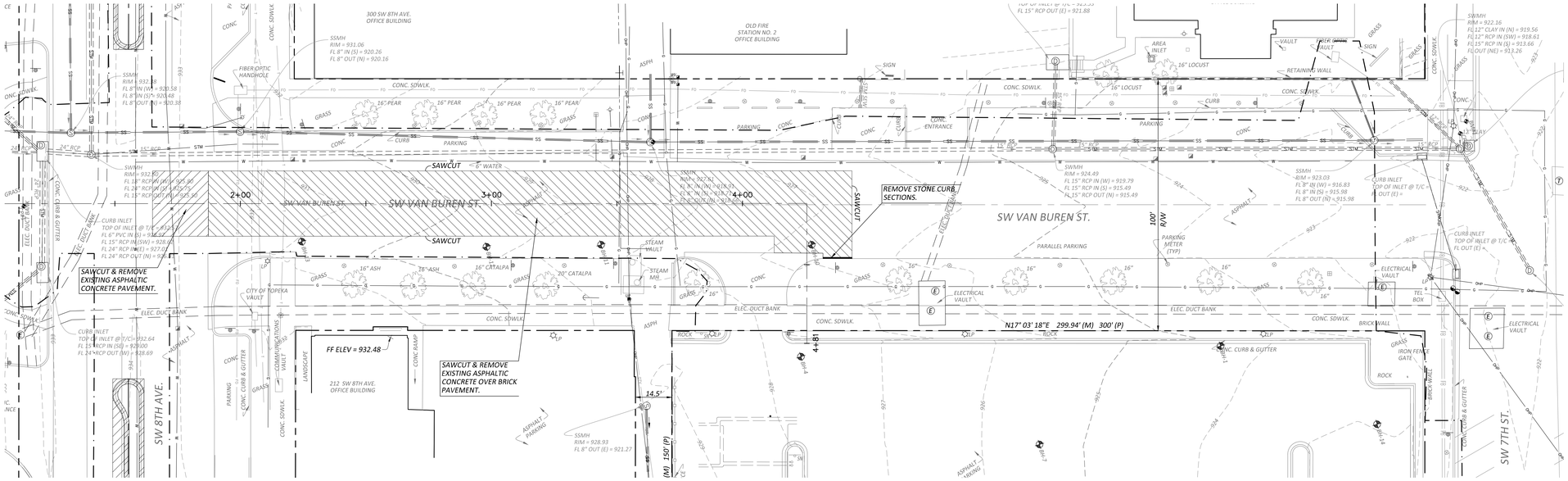

HTK ARCHITECTS PA
9300 W. 110TH ST. STE. 150
OVERLAND PARK KANSAS 66210
P: 913.663.3573
900 S. KANSAS AVE.
TOPEKA KANSAS 66612
P: 785.266.3171
WWW.HTKARCHITECTS.NET

KEVIN W. BECK LICENSED PROFESSIONAL ENGINEER 16259 4-15-15 KANSAS

SBB Schmidt, Beck & Boyd Engineering / Surveying
1415 SW Topeka Blvd.
Topeka, KS 66612
Ph: (785) 215-8630

DATE:
- 4-15-15

REVISED DATE:

HTK PROJECT NUMBER:
- 1410.03

Department of Administration
Office of Facilities and
Procurement Management
800 SW Jackson, Suite 700
Topeka, Kansas 66612-1216
Phone 785-296-8899
FAX 785-296-3456

STATE OF KANSAS
STATE OF KANSAS ENERGY & SERVICE CENTER
Seventh & Van Buren Street, Topeka, Kansas
BUILDING NUMBER
1730000038

4-15-15	DRAWN BY: Author	CHECKED BY: Checker	REV:

DEMOLITION & CONSTRUCTION PHASING PLAN - PHASE II

A-012651

C051

CONSTRUCTION DOCUMENTS

JCSBC
2-2-2016
Att.9G.--0005

GENERAL NOTES:

1. *THE DRAWING ON THIS SHEET IS FROM A PREVIOUS PROJECT THAT INCLUDED THE DEMOLITION OF SITE IMPROVEMENTS ON THIS PROPERTY PRIOR TO THE PARKING LOT CONSTRUCTION.*
2. *THE DRAWING IS FOR INFORMATION ONLY IN ORDER TO IDENTIFY POTENTIAL SUBSURFACE CONDITIONS.*

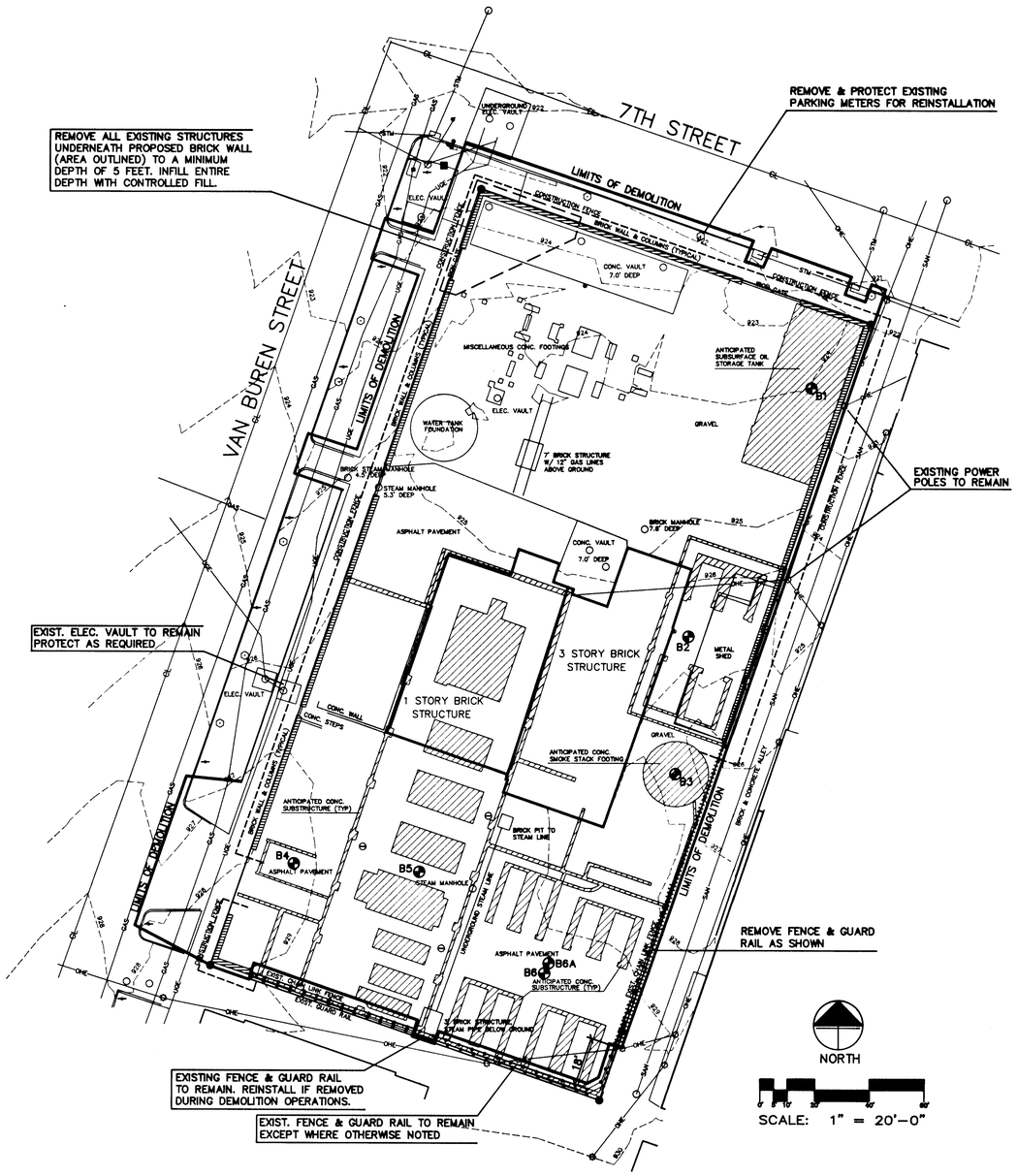

DEMOLITION NOTES:

1. ALL PAVEMENT, BUILDINGS, FOUNDATIONS, AND OTHER STRUCTURES WITHIN THE AREA DESIGNATED AS THE LIMITS OF DEMOLITION SHALL BE DEMOLISHED AND DISPOSED OF IN ACCORDANCE WITH THE SPECIFICATIONS
2. EXISTING SITE ELEMENTS AND TOPOGRAPHIC INFORMATION GATHERED AS PER SURVEY PERFORMED BY LANDPLAN ENGINEERING, P.A. OF LAWRENCE, KANSAS, APRIL 1989.
3. CONTRACTOR SHALL BE FULLY RESPONSIBLE FOR NOTIFYING ALL UTILITY OWNERS FOR FIELD LOCATIONS OF UTILITIES PRIOR TO ANY DEMOLITION OPERATIONS.
4. CONTRACTOR SHALL EXCAVATE ALL AREAS WITHIN PROPERTY TO A MINIMUM DEPTH OF 2 FEET BELOW FINISHED PARKING LOT GRADE. ANY SLABS ENCOUNTERED DURING EXCAVATION SHALL HAVE HOLES BROKEN IN THEM TO ALLOW FOR SUBSURFACE DRAINAGE. ANY SUBSURFACE VOIDS ENCOUNTERED DURING EXCAVATION SHALL BE FILLED AND COMPACTED PER SPECIFICATIONS AT NO EXTRA COST.
5. CONTRACTOR SHALL BACKFILL EXCAVATION AREA WITH APPROVED MATERIAL AS PER SPECIFICATIONS.
6. CONTRACTOR SHALL NOTIFY OWNER IMMEDIATELY IF PETROLEUM PRODUCTS OR OTHER HAZARDOUS MATERIALS ARE ENCOUNTERED.
7. CONTRACTOR SHALL INSTALL CONSTRUCTION FENCE ALONG LINE DESIGNATED AS "CONSTRUCTION FENCE" DURING THE DEMOLITION OF THE PERIMETER BRICK WALL. THE EAST AND SOUTH ALLEYS SHALL REMAIN OPEN AT ALL TIMES.

LEGEND

- OHE — OVERHEAD ELECTRIC LINE (KPL GAS SERVICE)
- UGE — UNDERGROUND ELECTRIC LINE (KPL GAS SERVICE)
- GAS — GAS LINE (KPL GAS SERVICE)
- SAN — SANITARY SEWER
- STM — STORM SEWER
- POWER POLE
- MANHOLE
- SIGN
- PARKING METER
- ANTICIPATED CONCRETE SUBSTRUCTURE
- B2 — BORING LOCATION

Scanning America DWG_LABEL FM003400

HTK ARCHITECTS PA
900 S. KANSAS AVE. TOPEKA, KANSAS 66612 P. 785.266.3273
9200 W. 110TH ST. STE. 150 OVERLAND PARK, KANSAS 66210 P. 913.663.3273
WWW.HTKARCHITECTS.NET

SBB Schmidt, Beck & Boyd Engineering / Surveying
1415 SW Topeka Blvd.
Topeka, KS 66612
Ph: (785) 215-8630

DATE:
- 4-15-15

REVISED DATE:

HTK PROJECT NUMBER:
- 1410.03

Department of Administration
Office of Facilities and
Procurement Management
800 SW Jackson, Suite 700
Topeka, Kansas 66612-1216
Phone 785-296-8899
FAX 785-296-3456

STATE OF KANSAS
STATE OF KANSAS ENERGY & SERVICE CENTER
Seventh & Van Buren Street, Topeka, Kansas
BUILDING NUMBER
17300.00038
4-15-15 DRAWN BY: Author CHECKED BY: Checker REV:

HISTORICAL DRAWING

A-012651

C052

CONSTRUCTION DOCUMENTS

JCSBC
2-2-2016
AtL9G..-0006

GENERAL NOTES:

1. ALL CONSTRUCTION METHODS AND MATERIALS USED IN THE CONSTRUCTION OF THE IMPROVEMENTS COVERED BY THESE PLANS SHALL BE IN ACCORDANCE WITH THE KANSAS DEPARTMENT OF TRANSPORTATION "STANDARD SPECIFICATIONS FOR STATE ROAD & BRIDGE CONSTRUCTION", LATEST EDITION AND SPECIAL PROVISIONS, SUPPLEMENTED WITH THE SPECIFICATIONS NOTED ON THIS SHEET AND ALL APPLICABLE CITY CODES, ORDINANCES AND STANDARD TECHNICAL DESIGN AND DRAWING DETAILS ON FILE AT THE CITY OF TOPEKA, KANSAS.
2. THE LOCATION OF ALL OVERHEAD AND UNDERGROUND UTILITIES MAY VARY FROM WHAT IS INDICATED IN THESE PLANS. IT SHALL BE THE CONTRACTOR'S RESPONSIBILITY TO COORDINATE WITH THE UTILITY OWNER TO LOCATE AND FLAG ALL UNDERGROUND UTILITIES WHETHER INDICATED OR NOT. NO EXCAVATION WILL BE PERMITTED IN THE AREA OF UNDERGROUND UTILITIES UNTIL ALL SUCH UTILITIES HAVE BEEN LOCATED AND IDENTIFIED TO THE SATISFACTION OF ALL PARTIES AND THEN ONLY WITH EXTREME CARE TO AVOID ANY POSSIBILITY OF DAMAGE TO THE UTILITY.
3. THE CONTRACTOR IS RESPONSIBLE FOR ANY AND ALL PERMITTING AND FEES THROUGH THE CITY OF TOPEKA DEVELOPMENT SERVICES DEPARTMENT.
4. A SECONDARY ENTRANCE WILL BE CONSTRUCTED WITH 8" CONCRETE ENTRANCE PAVEMENT IN EITHER OPTION 1 OR OPTION 2 LOCATION.
5. ALL PAVEMENT WITHIN THE VAN BUREN AND 8TH AVE. RIGHT OF WAY SHALL BE REPLACED IN ACCORDANCE WITH THE CITY OF TOPEKA PAVEMENT REPAIR DETAILS.
6. ALL STONE CURB SHALL BE SALVAGED FROM THE DEMOLITION PROCESS AND RE-INSTALLED. STONE CURB SHALL BE REMOVED AND REPLACED TO THE NEAREST JOINT.
7. THE CONTRACTOR SHALL PROVIDE ADEQUATE TRAFFIC CONTROL FOR THE CLOSURE OF 8TH AVENUE AND VAN BUREN DURING THE CONSTRUCTION OF THE UTILITY TUNNEL PORTION OF THE PROJECT. DETOUR ROUTING SHALL BE PROVIDED PER THE CITY OF TOPEKA STANDARD DRAWINGS. SEE TRAFFIC CONTROL PLANS AND DETAILS FOR ADDITIONAL DETAILS.
8. THE CONTRACTOR SHALL PROVIDE ADEQUATE CONSTRUCTION FENCING AND PROTECTION OF THE PROJECT SITE TO PROMOTE THE SAFETY AND SECURITY OF THE CONSTRUCTION FORCES AS WELL AS THE PUBLIC. THIS INCLUDES PROTECTION FOR VEHICULAR, PEDESTRIAN AND OTHER MODES OF TRANSIT.
9. ALL EXPANSION JOINTS WITHIN CONCRETE PAVEMENT SHALL BE SEALED WITH COLD TYPE JOINT SEALING COMPOUND IN ACCORDANCE WITH THE KANSAS DEPARTMENT OF TRANSPORTATION STANDARD SPECIFICIATIONS FOR STATE ROAD AND BRIDGE CONSTRUCTION, SUBSECTION 1502.

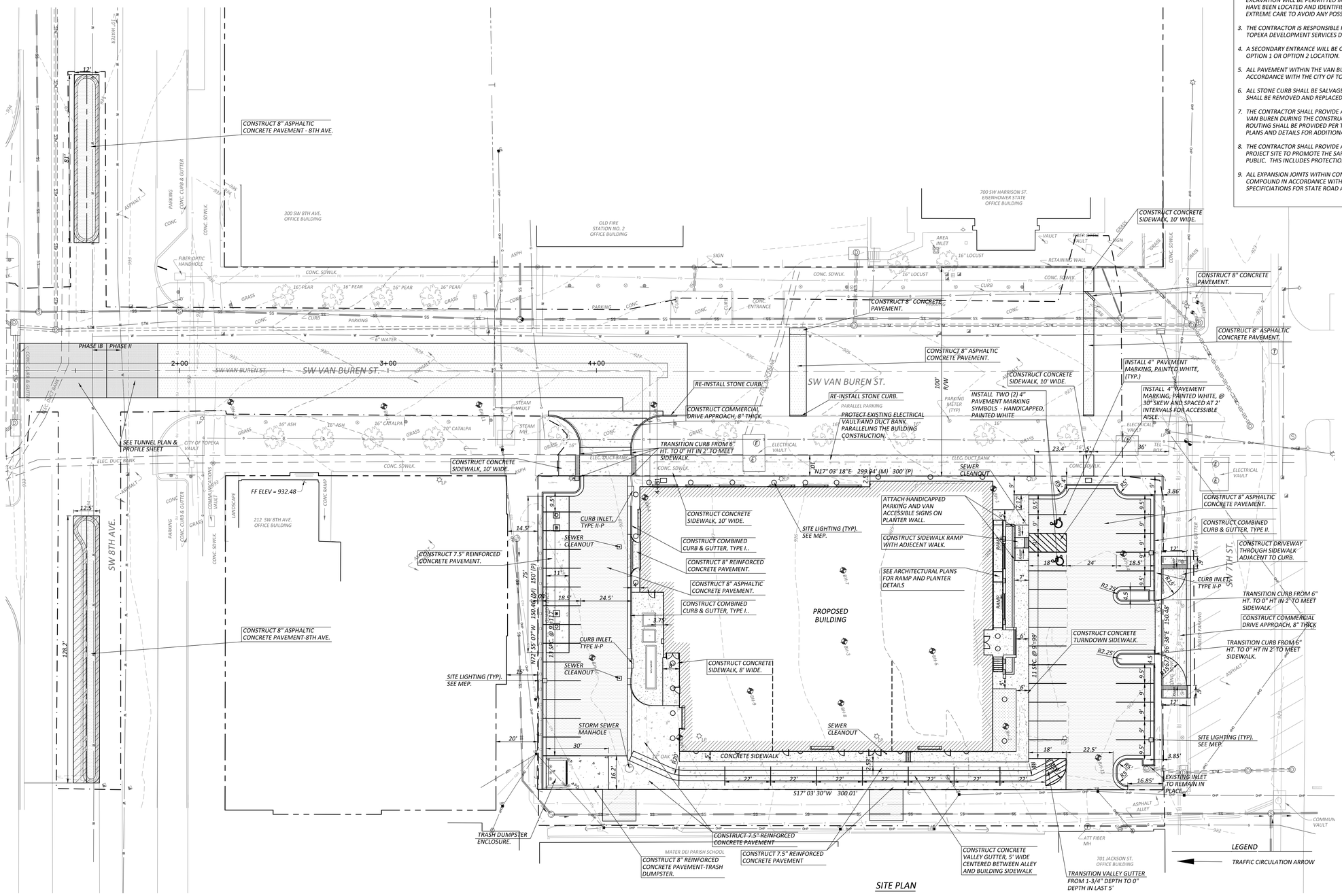

LEGEND

- SECTION CORNER
- FOUND CORNER AS NOTED
- SET 1/2"x24" REBAR W/ LS 919 CAP
- BENCH MARK
- U/E UTILITY EASEMENT
- D/E DRAINAGE EASEMENT
- D&U/E DRAINAGE & UTILITY EASEMENT
- (M) MEASURED
- (P) PLATTED
- WM WATER METER
- WV WATER VALVE
- SV SPRINKLER VALVE
- FH FIRE HYDRANT
- GM GAS METER
- GV GAS VALVE
- TP TELEPHONE PEDESTAL
- TMH TELEPHONE MANHOLE
- T TRANSFORMER/JUNCTION CABINET
- TV TV PEDESTAL
- PP POWER POLE
- GUY WIRE
- LP LIGHT POLE
- E ELECTRIC MANHOLE
- EM ELECTRIC METER
- TSL TRAFFIC SIGNAL LIGHT
- TSB TRAFFIC SIGNAL BOX
- TSM TRAFFIC SIGNAL MANHOLE
- CO CLEAN OUT
- STEEL PIPE BOLLARD
- SIGN
- TREE (DECIDUOUS)
- STUMP
- RUSH OR SHRUB
- RD ROOF DRAIN
- W WATER LINE
- UGP UNDERGROUND POWER LINE
- OHP OVERHEAD POWER LINE
- G GAS LINE
- T TELEPHONE CABLE
- FO FIBER OPTIC LINE
- CATV CABLE TELEVISION LINE
- TS TRAFFIC SIGNAL LINE
- SANITARY SEWER LINE
- STORM SEWER LINE
- AREA INLET
- X EXISTING FENCE
- (8) DENOTES NUMBER OF PARKING STALLS
- 1000.35 EXISTING GROUND ELEVATION

LEGEND

- 8" ASPHALTIC CONCRETE PAVEMENT - SITE (SEE SH. C103 FOR TYPICAL SECTION)
- 8" ASPHALTIC CONCRETE PAVEMENT - VAN BUREN (SEE SH. C103 FOR TYPICAL SECTION)
- 8" ASPHALTIC CONCRETE PAVEMENT - 8TH AVE. (SEE SH. C103 FOR TYPICAL SECTION)
- 7.5" REINFORCED CONCRETE PAVEMENT (SEE SH. C103 FOR TYPICAL SECTION)
- 8" REINFORCED CONCRETE PAVEMENT - DUMPSTER PAD (SEE SH. C103 FOR TYPICAL SECTION)
- 4" CONCRETE SIDEWALK OR TURNDOWN SIDEWALK (SEE PLAN)

LEGEND

TRAFFIC CIRCULATION ARROW

PROJECT CONTROL:
HORIZONTAL CONTROL:

CP #1: ½" REBAR W/SBB ENG CAP
N 269273.86, E 1971866.56

CP #2: ½" REBAR W/SBB ENG CAP
N 269829.48, E 1972006.45

VERTICAL CONTROL:

BM #1: "□" CUT IN NE CORNER OF ABANDONED CONCRETE PAD, SW QUAD. OF 7TH & VAN BUREN ELEV.=922.42
N 269833.15, E 1972002.50

C.T.B.M. #253.1 ON TRAFFIC SIGNAL BASE IN SW CORNER OF SW KANSAS AVE. AND SW 9TH ST. ELEV.=947.38

Horz.: 1"=20'
0 20'

HTK ARCHITECTS PA
900 S. KANSAS AVE. TOPEKA, KANSAS 66612 P. 785.266.3121
9300 W. 110TH ST. STE. 150 OVERLAND PARK, KANSAS 66210 P. 913.663.3373
WWW.HTKARCHITECTS.NET

KEVIN W. BECK LICENSED PROFESSIONAL ENGINEER 16259 4-15-15 KANSAS

SBB Schmidt, Beck & Boyd Engineering / Surveying
1415 SW Topeka Blvd.
Topeka, KS 66612
Ph: (785) 215-8630

DATE: 4-15-15

REVISED DATE:

HTK PROJECT NUMBER: 1410.03

Department of Administration
Office of Facilities and
Procurement Management
800 SW Jackson, Suite 700
Topeka, Kansas 66612-1216
Phone 785-296-8899
FAX 785-296-3456

STATE OF KANSAS
STATE OF KANSAS ENERGY & SERVICE CENTER
Seventh & Van Buren Street, Topeka, Kansas
BUILDING NUMBER 17300-00038

4-15-15 DRAWN BY: Author CHECKED BY: Checker REV:

SITE PLAN

A-012651

C100

CONSTRUCTION DOCUMENTS

JCSBC
2-2-2016
Att.9G.--0007

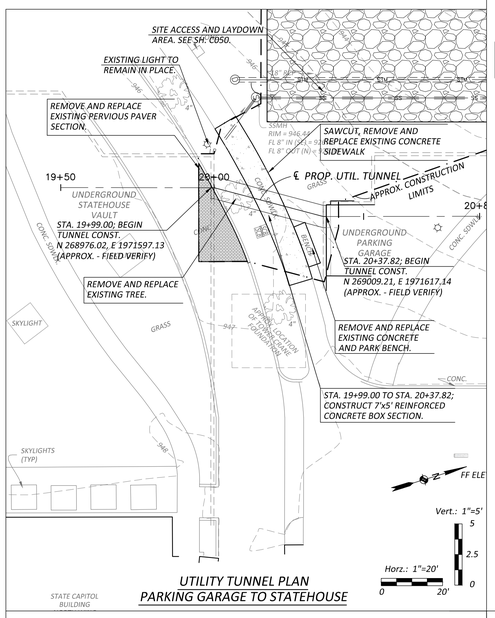

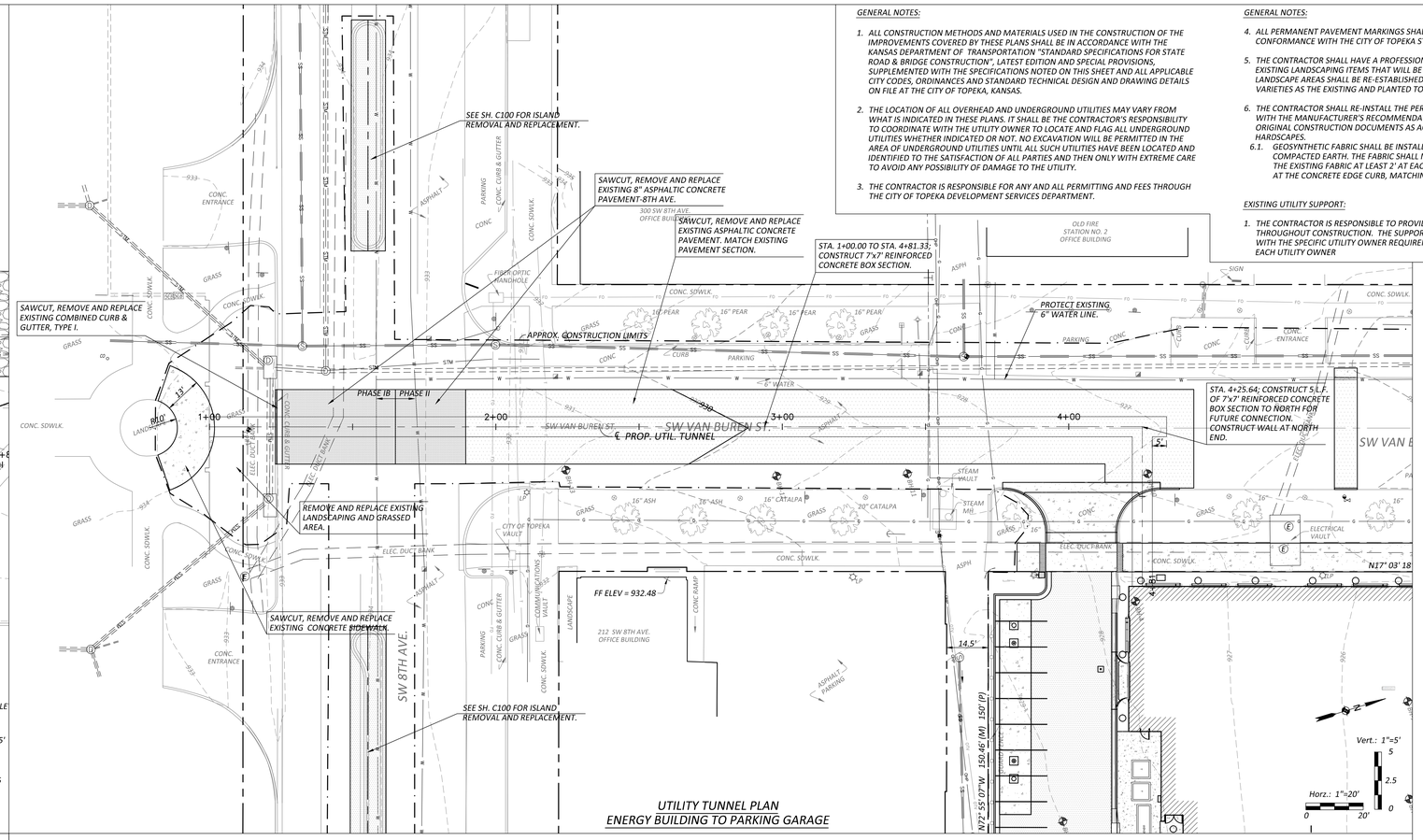

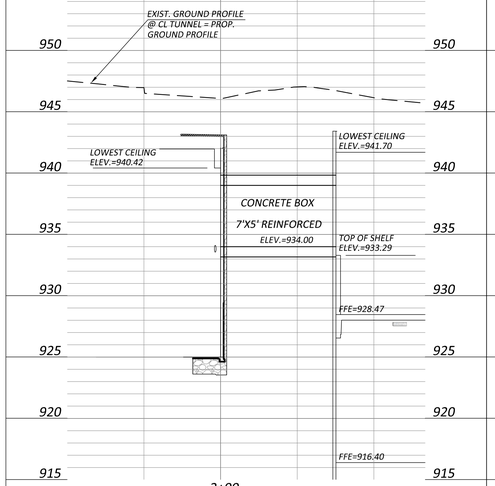

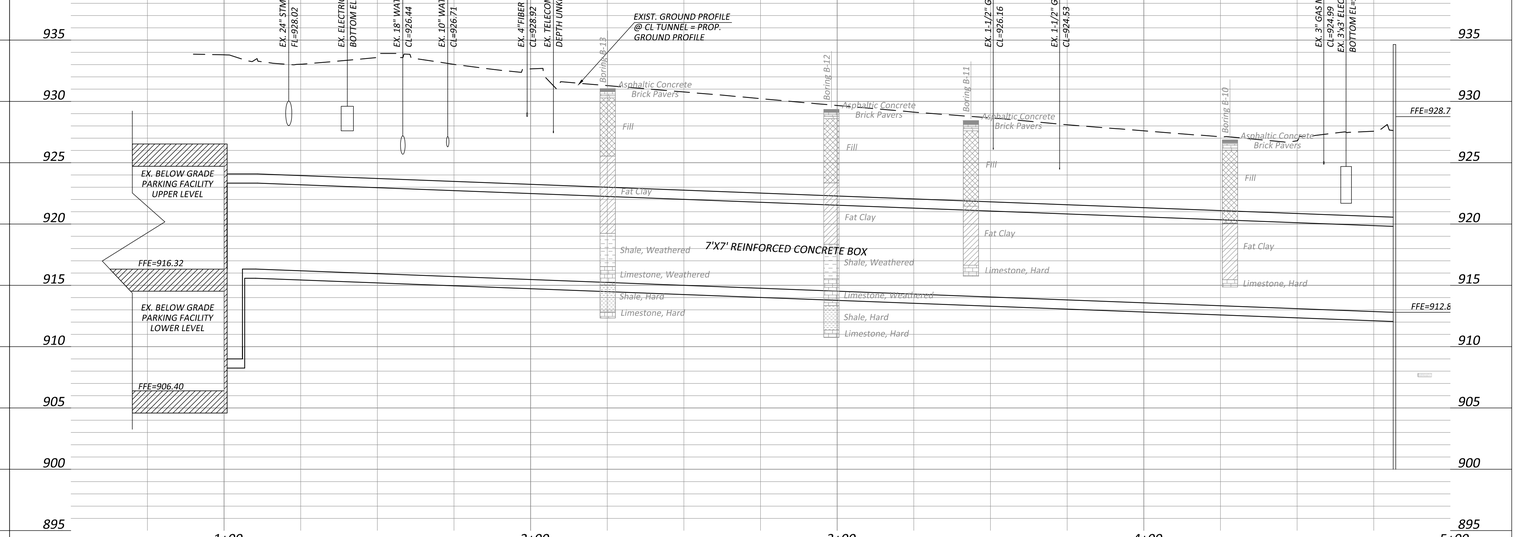

GENERAL NOTES:

1. ALL CONSTRUCTION METHODS AND MATERIALS USED IN THE CONSTRUCTION OF THE IMPROVEMENTS COVERED BY THESE PLANS SHALL BE IN ACCORDANCE WITH THE KANSAS DEPARTMENT OF TRANSPORTATION "STANDARD SPECIFICATIONS FOR STATE ROAD & BRIDGE CONSTRUCTION", LATEST EDITION AND SPECIAL PROVISIONS, SUPPLEMENTED WITH THE SPECIFICATIONS NOTED ON THIS SHEET AND ALL APPLICABLE CITY CODES, ORDINANCES AND STANDARD TECHNICAL DESIGN AND DRAWING DETAILS ON FILE AT THE CITY OF TOPEKA, KANSAS.
2. THE LOCATION OF ALL OVERHEAD AND UNDERGROUND UTILITIES MAY VARY FROM WHAT IS INDICATED IN THESE PLANS. IT SHALL BE THE CONTRACTOR'S RESPONSIBILITY TO COORDINATE WITH THE UTILITY OWNER TO LOCATE AND FLAG ALL UNDERGROUND UTILITIES WHETHER INDICATED OR NOT. NO EXCAVATION WILL BE PERMITTED IN THE AREA OF UNDERGROUND UTILITIES UNTIL ALL SUCH UTILITIES HAVE BEEN LOCATED AND IDENTIFIED TO THE SATISFACTION OF ALL PARTIES AND THEN ONLY WITH EXTREME CARE TO AVOID ANY POSSIBILITY OF DAMAGE TO THE UTILITY.
3. THE CONTRACTOR IS RESPONSIBLE FOR ANY AND ALL PERMITTING AND FEES THROUGH THE CITY OF TOPEKA DEVELOPMENT SERVICES DEPARTMENT.

GENERAL NOTES:

4. ALL PERMANENT PAVEMENT MARKINGS SHALL MATCH EXISTING AND BE IN CONFORMANCE WITH THE CITY OF TOPEKA STANDARD DRAWINGS AND SPECIFICATIONS.
5. THE CONTRACTOR SHALL HAVE A PROFESSIONAL LANDSCAPER IDENTIFY AND LOCATE ALL EXISTING LANDSCAPING ITEMS THAT WILL BE REMOVED DURING CONSTRUCTION. THE LANDSCAPE AREAS SHALL BE RE-ESTABLISHED WITH LIKE MATERIALS, SPECIES AND VARIETIES AS THE EXISTING AND PLANTED TO MATCH PRE-CONSTRUCTION CONDITIONS.
6. THE CONTRACTOR SHALL RE-INSTALL THE PERVIOUS PAVER SYSTEM IN ACCORDANCE WITH THE MANUFACTURER'S RECOMMENDATIONS. THE PAVERS WERE LISTED IN THE ORIGINAL CONSTRUCTION DOCUMENTS AS AQUA ROC AS MANUFACTURED BY BELGARD HARDSCAPES.
   6.1. GEOSYNTHETIC FABRIC SHALL BE INSTALLED BETWEEN THE AGGREGATE AND THE COMPACTED EARTH. THE FABRIC SHALL MATCH THE EXISTING AND SHALL OVERLAP THE EXISTING FABRIC AT LEAST 2' AT EACH EDGE. THE FABRIC SHALL BE TURNED UP AT THE CONCRETE EDGE CURB, MATCHING THE EXISTING IN ELEVATION.

EXISTING UTILITY SUPPORT:

1. THE CONTRACTOR IS RESPONSIBLE TO PROVIDE ADEQUATE SUPPORT OF ALL UTILITIES THROUGHOUT CONSTRUCTION. THE SUPPORT SHALL BE PROVIDED IN ACCORDANCE WITH THE SPECIFIC UTILITY OWNER REQUIREMENTS. THE CONTRACTOR SHALL CONTACT EACH UTILITY OWNER

HTK ARCHITECTS PA
9300 W. 110TH ST. STE. 150
OVERLAND PARK, KANSAS 66210
P. 913.663.3573
900 S. KANSAS AVE.
TOPEKA, KANSAS 66612
P. 785.266.3573
WWW.HTKARCHITECTS.NET

KEVIN W. BECK
LICENSED
16259
4-15-15
KANSAS
PROFESSIONAL ENGINEER

SBB
Schmidt, Beck & Boyd
Engineering / Surveying
1415 SW Topeka Blvd.
Topeka, KS 66612
Ph: (785) 215-8630

DATE:
- 4-15-15

REVISED DATE:
-
-
-
-

HTK PROJECT NUMBER:
- 1410.03

Department of Administration
Office of Facilities and
Procurement Management
800 SW Jackson, Suite 700
Topeka, Kansas 66612-1216
Phone 785-296-8899
FAX 785-296-3456

STATE OF KANSAS
STATE OF KANSAS ENERGY & SERVICE CENTER
Seventh & Van Buren Street, Topeka, Kansas
BUILDING NUMBER
1730000038
4-15-15 DRAWN BY: Author CHECKED BY: Checker REV:

TUNNEL PLAN & PROFILE

A-012651

C101

CONSTRUCTION DOCUMENTS

JCSBC
2-2-2016
Alt.9G.--0008

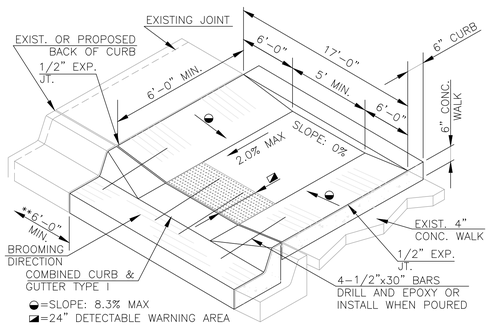

ISOMETRIC OF RAMP WITH ADJACENT WALK SHOWN

** IF CURB AND GUTTER AND/OR SIDEWALK TO BE REMOVED IS WITHIN 6'-0" OF AN EXISTING JOINT, REMOVE CURB AND GUTTER AND/OR SIDEWALK BACK TO EXISTING JOINT. JOINTS ARE TO BE PLACED AS PER SECTION 5, SUBSECTION 8 OF CITY/COUNTY STANDARD TECHNICAL SPECIFICATIONS.

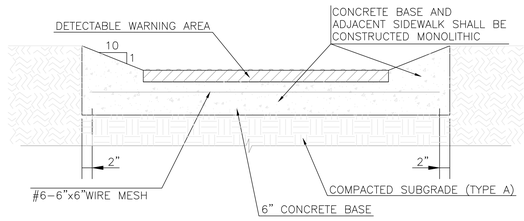

TYPICAL SECTION OF DETECTABLE WARNING SYSTEM

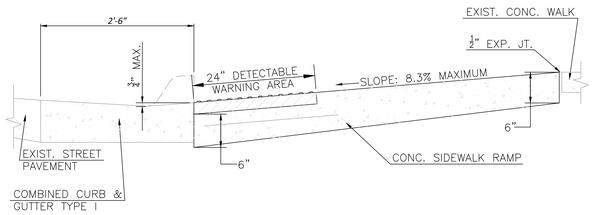

SIDEWALK RAMP DETAILS

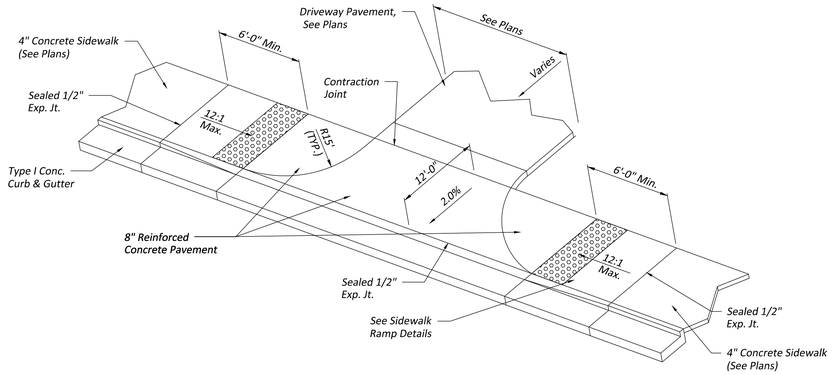

DRIVEWAY THROUGH SIDEWALK ADJACENT TO CURB

NO SCALE

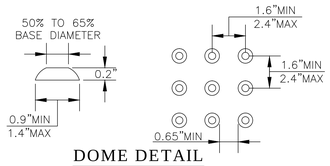

DOME DETAIL

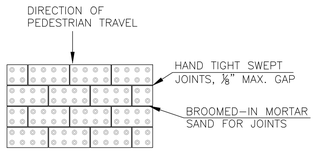

RUNNING BOND/PARALLEL ALIGNMENT AND JOINT DETAIL

Installation pattern for detectable warning paving bricks

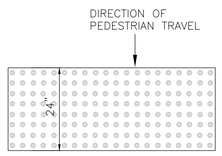

ARMOR-TILE CAST IN PLACE DETECTABLE WARNING SYSTEM

SPECIAL REQUIREMENTS FOR SIDEWALK RAMP CONSTRUCTION

1. SIDEWALK RAMPS SHALL BE CONSTRUCTED USING 6" THICK PAVEMENT CLASS CONCRETE (4000 PSI).
2. EXPANSION JOINTS SHALL BE SEALED WITH APPROVED JOINT SEALANT WHERE SIDEWALKS AND DRIVE ENTRANCES INTERSECT WITH PAVEMENT CURB.
3. PAVING BRICK (TRUNCATED DOME SURFACE) UNITS SHALL MEET THE REQUIREMENTS OF THE CITY OF TOPEKA/ SHAWNEE CO. STANDARD SPECIFICATIONS.
4. THE BRICKS SHALL BE PLACED IN A PATTERN THAT CONFORMS TO THIS DRAWING AND ALIGNED IN THE DIRECTION OF PEDESTRIAN TRAVEL.
5. THE BRICKS SHALL HAVE A TRUNCATED DOME TOP SURFACE FOR DETECTABLE WARNING TO PEDESTRIANS AND COMPLY WITH THE AMERICAN DISABILITIES ACT GUIDELINES.
6. THE TRUNCATED DOME AREA SHALL BE A MAXIMUM WIDTH OF THE SIDEWALK RAMP, MEDIAN RAMP OR AS SHOWN ON THE PLANS.
7. THE TRUNCATED DOME AREA SHALL BE A CONTRASTING COLOR TO THE ADJACENT SURFACES.
8. THE BRICKS SHALL BE SAW CUT ONLY AND ANY BRICK SHALL NOT BE LESS THAN 25% OF A FULL BRICK.
9. THE ARMOR-TILE CAST IN PLACE DETECTABLE WARNING SYSTEM, PAVESTONE DETECTABLE WARNING PAVERS OR IN ALL SIDEWALK RAMPS. APPROVED EQUAL SHALL BE USED.
10. THE MORTAR SAND SHALL MEET KANSAS DEPARTMENT OF TRANSPORTATION STANDARD SPECIFICATIONS.

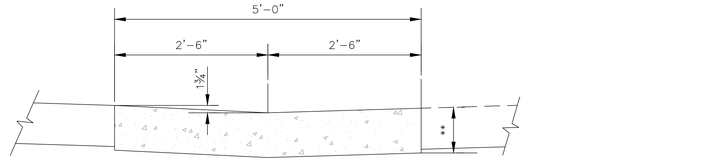

SECTION B-B

**THICKNESS OF VALLEY GUTTER TO MATCH ABUTTING PAVEMENT THICKNESS OR 8" MINIMUM.

VALLEY GUTTER DETAILS

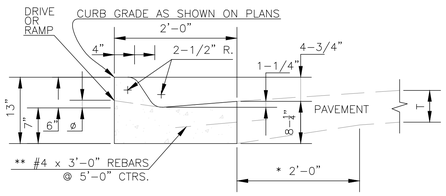

COMBINED CURB & GUTTER-TYPE II

**THE TIE BARS MAY BE ELIMINATED WITH ASPHALTIC CONCRETE PAVEMENT CONSTRUCTION.

ø 3/4" FOR SIDEWALK RAMP

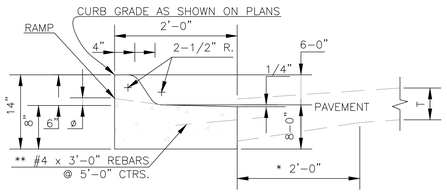

COMBINED CURB & GUTTER-TYPE II-DRY

**THE TIE BARS MAY BE ELIMINATED WITH ASPHALTIC CONCRETE PAVEMENT CONSTRUCTION.

ø 3/4" FOR SIDEWALK RAMP

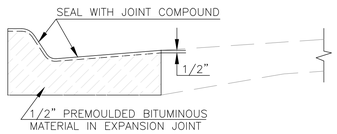

CURB AND GUTTER EXPANSION JOINT DETAILS

NOTE: 1/2" EXPANSION JOINTS TO BE PLACED AT THE END OF ALL INTERSECTION RETURNS.

SAND IS NOT AN APPROVED FILL OR SUBGRADE MATERIAL.

ALL EXPANSION JOINTS SHALL BE SEALED WITH APPROVED MATERIAL.

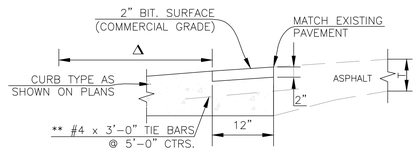

CC&G (MODIFIED)

NOTE:
CURB AND GUTTER ABUTTING EXISTING ASPHALT

Δ DIMENSION IS FROM BACK OF CURB TO TOE, SEE APPROPRIATE DETAIL FOR CURB TYPE AS SHOWN ON PLANS

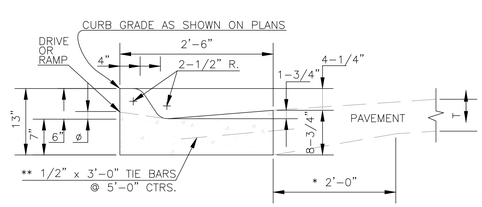

COMBINED CURB & GUTTER-TYPE I

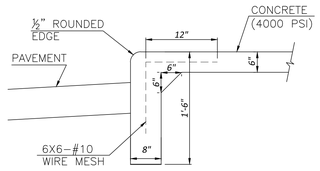

TURNDOWN SIDEWALK DETAIL

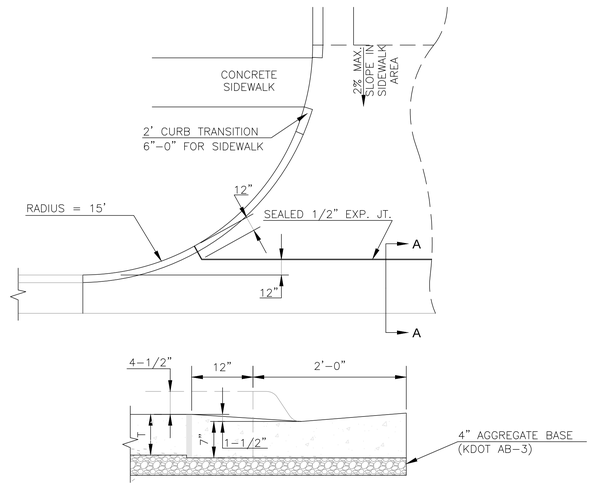

SECT. A - A

T=8" NON-REINFORCED FOR COMMERCIAL DRIVE

COMMERCIAL DRIVE APPROACH

HTK ARCHITECTS PA
900 S. KANSAS AVE. TOPEKA KANSAS 66612 P. 785.266.3273
9300 W. 110TH ST. STE. 150 OVERLAND PARK KANSAS 66210 P. 913.663.3273
WWW.HTKARCHITECTS.NET

KEVIN W. BECK LICENSED PROFESSIONAL ENGINEER 16259 4-15-15 KANSAS

SBB Schmidt, Beck & Boyd Engineering / Surveying
1415 SW Topeka Blvd.
Topeka, KS 66612
Ph: (785) 215-8630

DATE:
● 4-15-15

REVISED DATE:
●
●
●
●

HTK PROJECT NUMBER:
● 1410.03

Department of Administration
Office of Facilities and
Procurement Management
800 SW Jackson, Suite 700
Topeka, Kansas 66612-1216
Phone 785.296-8899
FAX 785.296-3456

STATE OF KANSAS
STATE OF KANSAS ENERGY & SERVICE CENTER
Seventh & Van Buren Street, Topeka, Kansas
BUILDING NUMBER
17300-00038

4-15-15 DRAWN BY: Author CHECKED BY: Checker REV:

SITE DETAILS I

A-012651

C102

CONSTRUCTION DOCUMENTS

JCSBC
2-2-2016
Att.9G.--0009

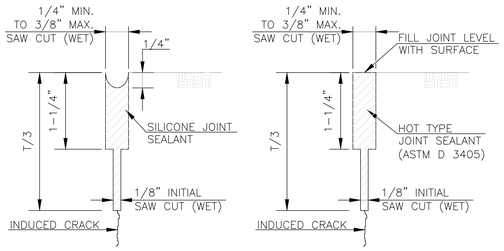

SILICONE JOINT OPTION 1 | HOT TYPE JOINT OPTION 2

TRANSVERSE AND LONGITUDINAL CONTRACTION JOINTS

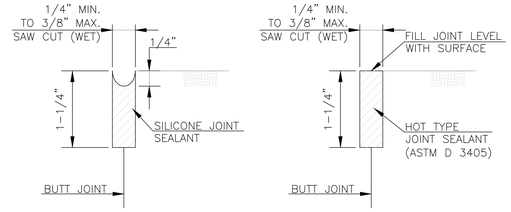

SILICONE JOINT OPTION 1 | HOT TYPE JOINT OPTION 2

TRANSVERSE AND LONGITUDINAL BUTT JOINTS

NOTE: ALL CONCRETE PAVEMENT JOINTS ARE TO BE SEALED WITH JOINT SEALANT.

CONCRETE JOINTING DETAILS

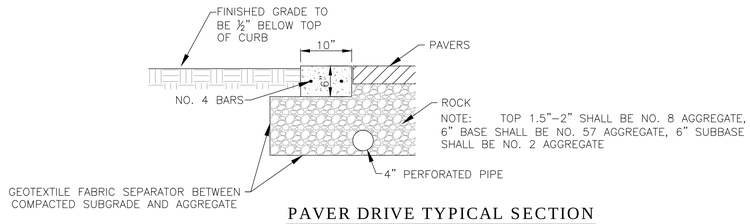

PAVER DRIVE TYPICAL SECTION

NOTES:
1. THE CONTRACTOR SHALL DRILL 18" INTO REMAINING CURB AND EPOXY REBAR INTO EXISTING CURB
2. THE CONTRACTOR SHALL MATCH EXISTING IN ALL FACETS OF THE PAVER CONSTRUCTION.
3. THE PAVER SURFACE SHALL MATCH EXISTING.
4. THE PERFORATED PIPE SHALL BE RE–INSTALLED AND ATTACHED TO THE EXISTING PIPE TO THE EAST AND WEST.
5. GEOTEXTILE FABRIC SHALL MATCH EXISTING AND SHALL OVERLAP EXISTING AT ALL EDGES A MINIMUM OF 2'.
6. ORIGINAL PLANS INDICATE PAVER SYSTEM IS AQUA ROC AS MANUFACTURED BY BELGARD HARDSCAPE. INSTALLATION SHALL FOLLOW MANUFACTURER'S RECOMMENDATIONS.

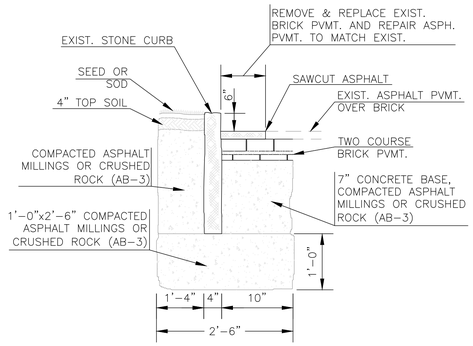

REPLACEMENT/REPAIR OF STONE CURB

NOTES:
1. REMOVE EXISTING CURB – SALVAGE STONE FOR REUSE.
2. SALVAGE BRICK PAVERS AND SIDEWALK BRICK FOR REUSE.
3. EXCAVATE TO LIMITS SHOWN AND PLACE 1'x2'–6" COMPACTED BASE (ASPHALT MILLINGS OR CRUSHED ROCK (AB–3).
4. SET STONE CURBS TO LINE AT GRADE SHOWN AND STABILIZE CURBS WITH COMPACTED ASPHALT MILLINGS OR CRUSHED ROCK (AB–3). FINISHED CURB SHALL BE 6" HIGH WITH A MAXIMUM TOLERANCE OF 1"±. CURB STONES SHALL MATCH JOINT TO JOINT ±1/2". CURB STONES SHALL BE SET IN MAXIMUM LENGTHS OF 3', MINIMUM LENGTHS OF 2', EXCEPT AT A SINGLE POINT OF CLOSURE ON SIDEWALK CUTS.
5. REPLACE BRICK STREET PAVERS AT LOCATIONS WHERE CONCRETE CURB AND GUTTER ARE REMOVED. BRICK PAVEMENT SHALL BE RESTORED AS SHOWN ABOVE. BRICK PAVERS SHALL BE PROVIDED BY THE CONTRACTOR TO MATCH THE EXISTING PAVERS.
6. REPAIR STREET SURFACE TO MATCH EXISTING. IF EXISTING IS AN ASPHALT OVERLAY, REPAIR TO MATCH EXISTING WITH ASPHALTIC CONCRETE IN ACCORDANCE WITH CITY STANDARD TECHNICAL SPECIFICATIONS, LATEST EDITION.

TYPICAL STONE CURB DETAIL

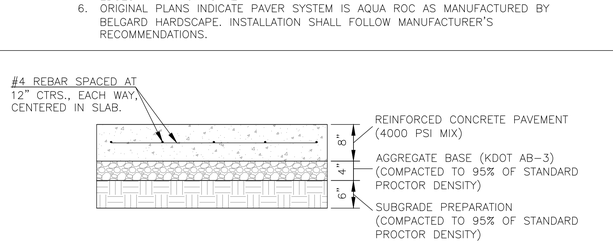

8" REINFORCED CONCRETE PAVEMENT - DUMPSTER PAD

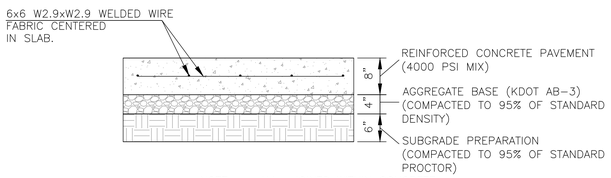

NOTE: ALL JOINTS WITHIN CONCRETE PAVEMENT SHALL BE SEALED.

7.5" REINFORCED CONCRETE PAVEMENT

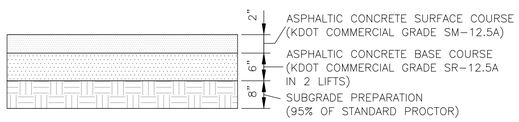

8" ASPHALTIC CONCRETE PAVEMENT - SITE

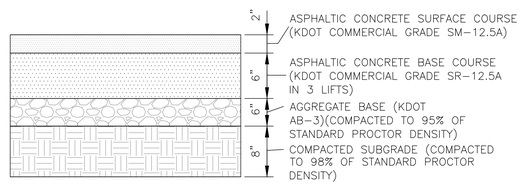

NOTE: FIELD VERIFY EXISTING PAVEMENT THICKNESS. CONTRACTOR SHALL BE RESPONSIBLE FOR ADDING OR REMOVING SUBGRADE MATERIAL AS REQUIRED TO CONSTRUCT NEW PAVEMENT WITHIN 8TH AVE.

8" ASPHALTIC CONCRETE PAVEMENT - 8TH AVE.

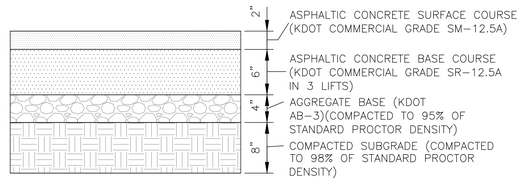

8" ASPHALTIC CONCRETE PAVEMENT - VAN BUREN

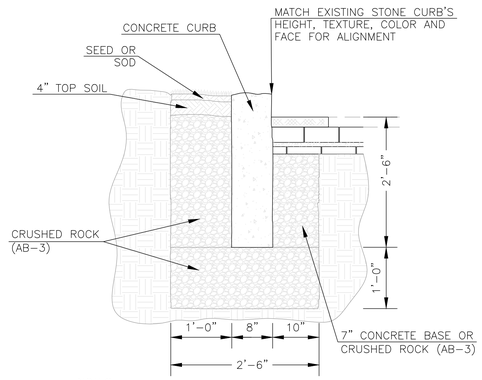

NOTES:
1. EXCAVATE TO LIMITS SHOWN AND PLACE 1'X2'–6" COMPACTED BASE OF CRUSHED ROCK (AB–3).
2. CONSTRUCT JOINTS AT 20' CENTERS MAXIMUM.
3. AFTER PLACEMENT STABILIZE BACK OF CURB WITH CRUSHED ROCK (AB–3) AND ADD PAVEMENT BASE OF 7" CONCRETE OR COMPACTED CRUSHED ROCK (AB–3).

REPLACEMENT OF STONE CURB WITH MATCHING CONCRETE CURB

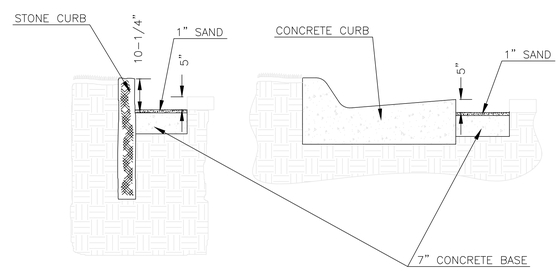

NOTES:
1. REMOVE BRICKS AND INSTALL CURB.
2. PLACE 7" CONCRETE BASE AS SHOWN.
3. PLACE 1" SAND AS SHOWN.
4. RESET BRICKS.

INSTALLING CURB ADJACENT TO EXISTING BRICK PAVEMENT

HTK ARCHITECTS PA
900 S. KANSAS AVE. TOPEKA KANSAS 66612 P. 785.266.3373
9300 W. 110TH ST. STE. 150 OVERLAND PARK KANSAS 66210 P. 913.663.3573
WWW.HTKARCHITECTS.NET

KEVIN W. BECK LICENSED 16259 4-15-15 KANSAS PROFESSIONAL ENGINEER

SBB Schmidt, Beck & Boyd Engineering / Surveying
1415 SW Topeka Blvd.
Topeka, KS 66612
Ph: (785) 215-8630

DATE: 4-15-15

REVISED DATE:

HTK PROJECT NUMBER: 1410.03

Department of Administration
Office of Facilities and Procurement Management
800 SW Jackson, Suite 700
Topeka, Kansas 66612-1216
Phone 785-296-6899
FAX 785-296-3456

STATE OF KANSAS
STATE OF KANSAS ENERGY & SERVICE CENTER
Seventh & Van Buren Street, Topeka, Kansas
BUILDING NUMBER 17300-00038
DRAWN BY: Author CHECKED BY: Checker REV:
4-15-15

SITE DETAILS II

A-012651

C103

CONSTRUCTION DOCUMENTS

JCSBC
2-2-2016
AtL9G.--0010

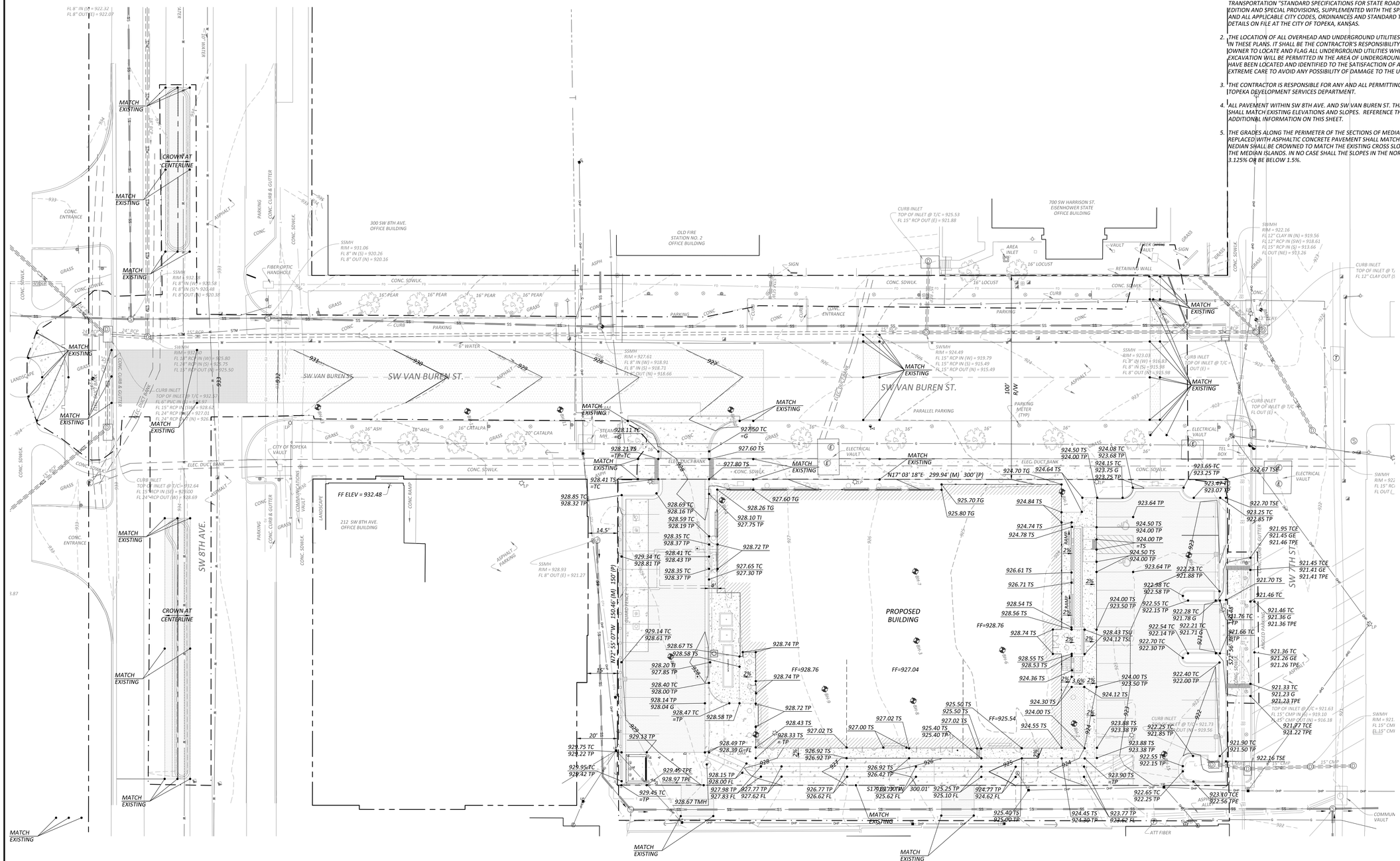
SW VAN BUREN ST.
SW 8TH AVE.
SW 7TH ST.
PROPOSED BUILDING
FF=928.76
FF=927.04
FF=925.54
FF ELEV = 932.48
N72° 55' 07"W 150.46' (M) 150' (P)
S17° 03' 18"E 299.94' (M) 300' (P)
300 SW 8TH AVE. OFFICE BUILDING
212 SW 8TH AVE. OFFICE BUILDING
OLD FIRE STATION NO. 2 OFFICE BUILDING
700 SW HARRISON ST. EISENHOWER STATE OFFICE BUILDING
CITY OF TOPEKA VAULT
ELECTRICAL VAULT
TEL BOX
COMMUNICATIONS VAULT
ATT FIBER
MATCH EXISTING
CROWN AT CENTERLINE
CONC. ENTRANCE
CONC. SDWLK.
CONC. CURB & GUTTER
ASPHALT
PARKING
GRASS
LANDSCAPE
CONC. RAMP
ELEC. DUCT BANK
PARALLEL PARKING
ANGLED PARKING
RETAINING WALL
SIGN
FIBER OPTIC HANDHOLE
STEAM MH
AREA INLET
CURB INLET TOP OF INLET @ T/C = 925.53 FL 15" RCP OUT (E) = 921.88
CURB INLET TOP OF INLET @ T/C = 932.37 FL 6" PVC IN (W) = 927.... FL 15" RCP IN (SW) = 928.62 FL 24" RCP IN (S) = 927.01 FL 24" RCP OUT (N) = 926.
CURB INLET TOP OF INLET @ T/C = 932.64 FL 15" RCP IN (S) = 929.00 FL 24" RCP OUT (W) = 928.69
SSMH RIM = 931.06 FL 8" IN (S) = 920.26 FL 8" OUT (N) = 920.16
SSMH RIM = 932.28 FL 8" IN (W) = 920.58 FL 8" IN (S) = 920.48 FL 8" OUT (N) = 920.38
SSMH RIM = 927.61 FL 8" IN (W) = 918.91 FL 8" IN (S) = 918.71 FL 8" OUT (N) = 918.66
SSMH RIM = 924.49 FL 15" RCP IN (W) = 919.79 FL 15" RCP IN (S) = 915.49 FL 15" RCP OUT (N) = 915.49
SSMH RIM = 923.04 FL 8" IN (W) = 916.83 FL 8" IN (S) = 915.98 FL 8" OUT (N) = 915.98
SSMH RIM = 928.93 FL 8" OUT (E) = 921.27
SWMH RIM = 922.16 FL 12" CLAY IN (N) = 919.56 FL 12" RCP IN (SW) = 918.61 FL 15" RCP IN (S) = 913.66 FL OUT (NE) = 913.26
SWMH RIM = 931.87 FL 18" RCP IN (W) = 925.80 FL 24" RCP IN (S) = 925.75 FL 15" RCP OUT (N) = 925.50
CURB INLET TOP OF INLET @ T/C = 925.53 FL 15" RCP OUT (E) = 921.88
CURB INLET TOP OF INLET @ T/C = 923.65 FL OUT (E) =
CURB INLET TOP OF INLET @ T/C = 921.63 FL 15" CMP IN (E) = 919.10 FL 15" CMP OUT (N) = 916.18
CURB INLET TOP OF INLET @ T/C = 921.73 FL OUT (N) = 919.56
CURB INLET TOP OF INLET @ T/C = FL 12" CLAY OUT (S
928.11 TC =G
927.50 TC =G
927.60 TS
927.80 TS
928.21 TS =TP=TC
928.41 TS =TC
928.85 TC 928.32 TP
928.69 TC 928.16 TP
928.59 TC 928.19 TP
928.26 TG
928.10 TI 927.75 TP
927.60 TG
928.35 TC 928.37 TP
928.72 TP
929.34 TC 928.81 TP
928.41 TC 928.43 TP
928.35 TC 928.37 TP
927.65 TC 927.30 TP
929.14 TC 928.61 TP
928.67 TS
928.58 TS
928.74 TP
928.20 TI 927.85 TP
928.40 TC 928.00 TP
928.14 TP 928.04 G
928.47 TC =TP
928.58 TP
928.72 TP
928.43 TS
928.33 TS =TP
927.02 TS
927.00 TS
929.13 TP
929.75 TC 929.22 TP
928.49 TP
928.39 G=FL
926.92 TS 926.92 TP
929.95 TC 929.42 TP
929.45 TPE
928.97 TPE
928.15 TP 928.00 FL
927.98 TP 927.83 FL
927.77 TP 927.62 FL
929.45 TC =TP
928.67 TMH
926.92 TS 926.42 TP
926.77 TP 926.62 FL
925.50 TS 925.50 TS
925.40 TS 925.40 TP
927.02 TS
925.40 TS 925.40 TP
925.25 TP 925.10 FL
924.77 TP 924.62 FL
925.70 TG
925.80 TG
924.70 TG 924.64 TS
924.84 TS
924.74 TS 924.78 TS
926.61 TS
926.71 TS
928.54 TS 928.56 TS
928.74 TS
928.55 TS 928.53 TS
924.36 TS
924.30 TS
924.00 TS
924.55 TS
923.88 TS 923.38 TP
923.38 TP
923.90 TS =TP
924.45 TS 924.30 TP
923.77 TP 923.62 FL
924.50 TS 924.00 TP
924.08 TC 923.68 TP
924.15 TC 923.75 G 923.25 TP
923.64 TP
924.50 TS 924.00 TP
924.00 TP =TS 924.50 TS 924.00 TP
923.64 TP
922.98 TC 922.58 TP
924.00 TS 923.50 TP
922.55 TC 922.15 TP
924.00 TS 923.50 TP
924.12 TS
922.55 TC 922.15 TP
922.65 TC 922.25 TP
923.65 TC 923.25 TP
923.42 TP
923.07 TP
922.67 TSE
922.70 TSE
923.25 TC 922.85 TP
921.95 TCE 921.45 GE 921.46 TPE
921.45 TCE 921.41 GE 921.41 TPE
922.28 TC 921.88 TP
922.28 TC 921.78 G
922.21 TC 921.71 G
922.54 TC 922.14 TP
922.70 TC 922.30 TP
921.70 TS
921.46 TC
921.46 TC 921.36 G 921.36 TPE
921.76 TC TP
921.66 TC TP
922.40 TC 922.00 TP
921.36 TC 921.26 GE 921.26 TPE
921.33 TC 921.23 G 921.23 TPE
921.27 TCE 921.22 TPE
921.90 TC 921.50 TP
922.16 TSE
923.10 TCE 922.56 TPE
SWMH RIM = 921. FL 15" CMI FL 15" CMI
15" CMP
ASPHALT PARKING
CONC. PARKING
CONC. RAMP
CONC. ENTRANCE
CONC. CURB & GUTTER
CONC. SDWLK.
CONC. CURB
CONC. SIGN BASE
CONC. SIGN
CONC. RETAINING WALL
CONC. PLANTER
CONC. SIDEWALK
CONC. RAMP
CONC. STAIRS
CONC. CURB & GUTTER
CONC. SIDEWALK
CONC. RAMP
CONC. ENTRANCE

GENERAL NOTES:

1. *ALL CONSTRUCTION METHODS AND MATERIALS USED IN THE CONSTRUCTION OF THE IMPROVEMENTS COVERED BY THESE PLANS SHALL BE IN ACCORDANCE WITH THE KANSAS DEPARTMENT OF TRANSPORTATION "STANDARD SPECIFICATIONS FOR STATE ROAD & BRIDGE CONSTRUCTION", LATEST EDITION AND SPECIAL PROVISIONS, SUPPLEMENTED WITH THE SPECIFICATIONS NOTED ON THIS SHEET AND ALL APPLICABLE CITY CODES, ORDINANCES AND STANDARD TECHNICAL DESIGN AND DRAWING DETAILS ON FILE AT THE CITY OF TOPEKA, KANSAS.*
2. *THE LOCATION OF ALL OVERHEAD AND UNDERGROUND UTILITIES MAY VARY FROM WHAT IS INDICATED IN THESE PLANS. IT SHALL BE THE CONTRACTOR'S RESPONSIBILITY TO COORDINATE WITH THE UTILITY OWNER TO LOCATE AND FLAG ALL UNDERGROUND UTILITIES WHETHER INDICATED OR NOT. NO EXCAVATION WILL BE PERMITTED IN THE AREA OF UNDERGROUND UTILITIES UNTIL ALL SUCH UTILITIES HAVE BEEN LOCATED AND IDENTIFIED TO THE SATISFACTION OF ALL PARTIES AND THEN ONLY WITH EXTREME CARE TO AVOID ANY POSSIBILITY OF DAMAGE TO THE UTILITY.*
3. *THE CONTRACTOR IS RESPONSIBLE FOR ANY AND ALL PERMITTING AND FEES THROUGH THE CITY OF TOPEKA DEVELOPMENT SERVICES DEPARTMENT.*

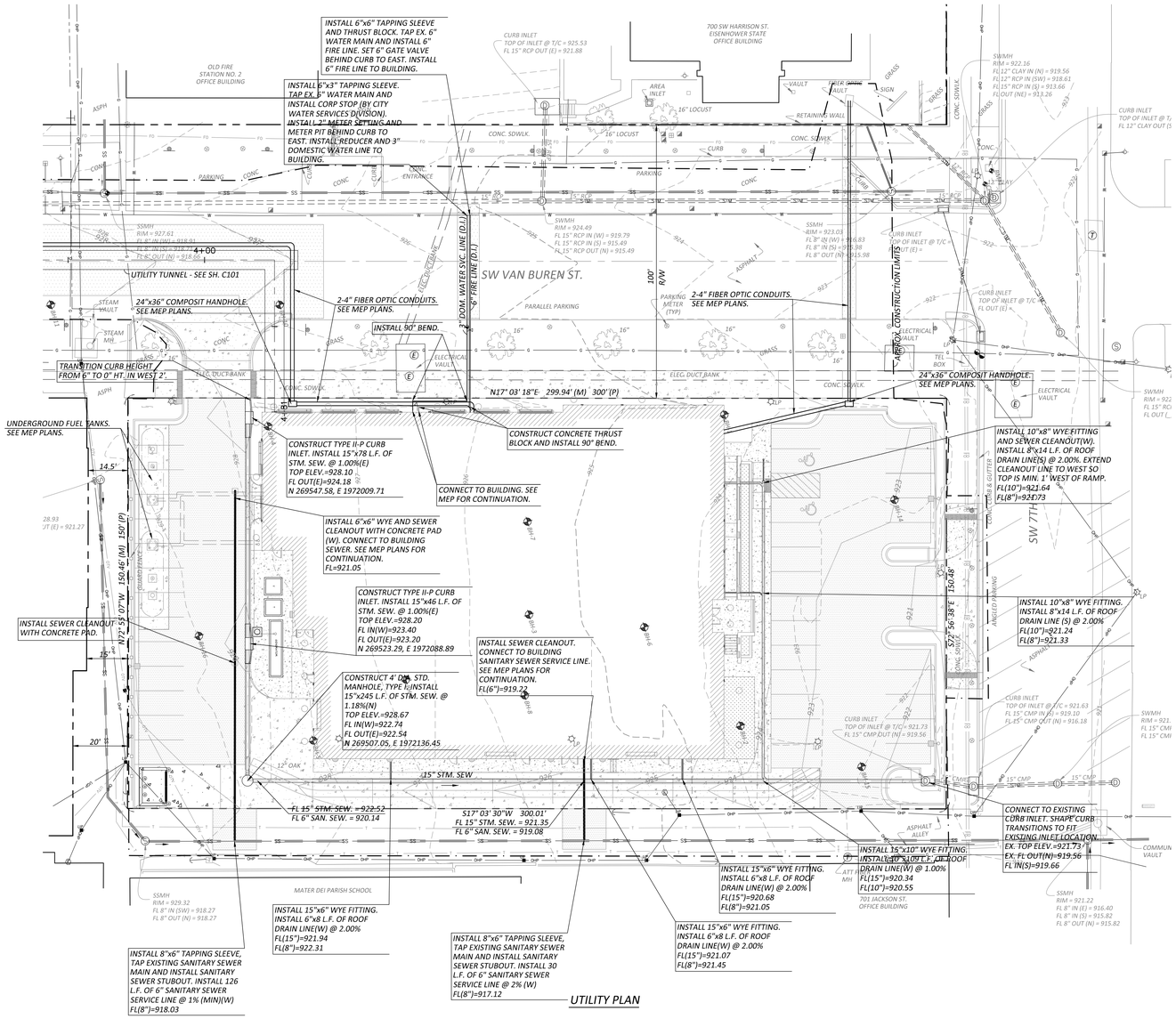

UTILITY PLAN

HTK ARCHITECTS PA
9300 W. 110TH ST. STE. 150
OVERLAND PARK, KANSAS 66210
P. 913.663.5373
900 S. KANSAS AVE.
TOPEKA, KANSAS 66612
P. 785.266.5373
WWW.HTKARCHITECTS.NET

KEVIN W. BECK LICENSED PROFESSIONAL ENGINEER 16259 4-15-15 KANSAS

SBB Schmidt, Beck & Boyd Engineering / Surveying
1415 SW Topeka Blvd.
Topeka, KS 66612
Ph: (785) 215-8630

DATE:
- 4-15-15

REVISED DATE:
-
-
-
-
-

HTK PROJECT NUMBER:
- 1410.03

Department of Administration
Office of Facilities and
Procurement Management
800 SW Jackson, Suite 700
Topeka, Kansas 66612-1216
Phone 785-296-8899
FAX 785-296-3456

STATE OF KANSAS
STATE OF KANSAS ENERGY & SERVICE CENTER
Seventh & Van Buren Street, Topeka, Kansas
BUILDING NUMBER 17300.00038
4-15-15 DRAWN BY: Author CHECKED BY: Checker REV:

UTILITY PLAN

A-012651

C300

CONSTRUCTION DOCUMENTS

Horz.: 1"=20'
0 20'

JCSBC
2-2-2016
Att.9G.--0012

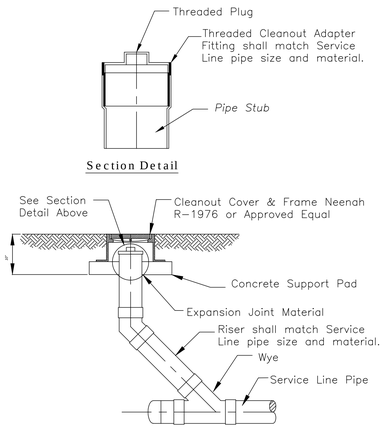

NOTE: A 2'x2'x7.5" CONCRETE PAD SHALL BE CONSTRUCTED AROUND THE CLEANOUT COVER AND FRAME WHEN CONSTRUCTED IN ASPHALTIC CONCRETE PAVEMENT.

TOP OF CLEANOUT COVER AND FRAME SHALL BE 1" ABOVE THE FINISHED GRADES WHEN INSTALLED IN GRASS OR LANDSCAPING.

SEWER CLEANOUT DETAILS

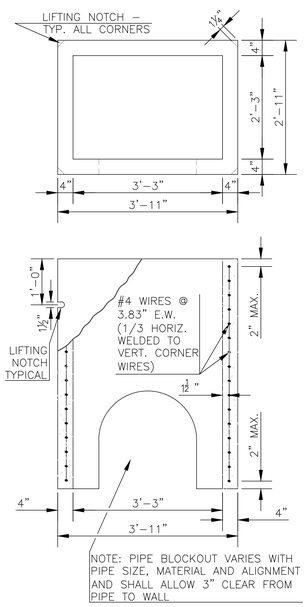

NOTE: PIPE BLOCKOUT VARIES WITH PIPE SIZE, MATERIAL AND ALIGNMENT AND SHALL ALLOW 3" CLEAR FROM PIPE TO WALL

PRECAST INLET BOX RISER

NOTES:
1. CAST IN PLACE CONC. SHALL BE 4000PSI.
2. PRECAST CONC. SHALL BE 4000 PSI.
3. REINFORCING WIRE SHALL CONFORM TO ASTM A82.
4. REINFORCING BARS SHALL CONFORM TO ASTM A615.
5. GROUT ALL PIPES IN PLACE.
6. GRATES & FRAMES SHALL BE ASTM A36 STEEL COATED WITH BITUMASTIC BLACK SOLUTION (COAL TAR BASE) AS MANUFACTURED BY KOPPERS OR APPROVED EQUAL.
7. THE INLET TOP SHALL SIT SQUARELY ON TOP OF THE INLET BOTTOM SECTION. THE INLET WALLS SHALL NOT BE OFFSET MORE THAN ONE INCH BETWEEN TOP AND BOTTOM SECTIONS.

STANDARDS FOR SETTING LINE AND GRADE FOR SEWER CONSTRUCTION:

1. STAKES, SPIKES, SHINERS, OR CROSSES SET BY TRANSIT AT THE SURFACE ON AN OFFSET FROM THE SEWER CENTER LINE.
2. STAKES ARE TO BE SET IN THE TRENCH BOTTOM ON THE SEWER LINE AS THE ROUGH GRADE FOR SEWER IS COMPLETED.
3. ELEVATIONS GIVEN TO THE FINISHED TRENCH GRADE AND SEWER INVERT, WHILE SEWER LAYING PROGRESSES.

STANDARD METHODS FOR TRANSFERRING LINE AND GRADE TO SEWER TRENCH BOTTOM:

ELECTRONIC LASER EQUIPMENT–STAKING SHALL BE AT 25' INTERVALS FOR THE FIRST 100' AND EVERY 100' THEREAFTER UNTIL THE NEXT MANHOLE IS REACHED.

BATTER BOARDS AND BATTER BOARD SUPPORTS–STAKING SHALL BE EVERY 25'.

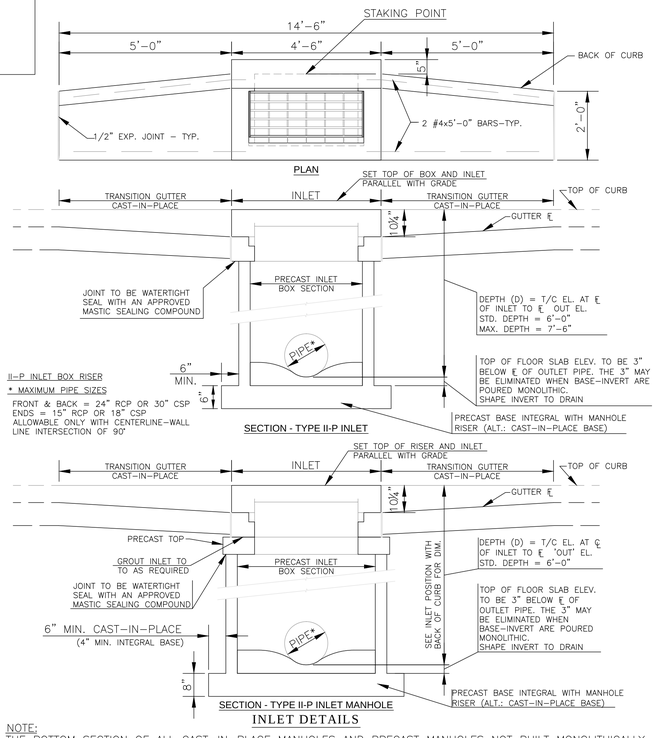

INLET DETAILS

NOTE:
THE BOTTOM SECTION OF ALL CAST–IN–PLACE MANHOLES AND PRECAST MANHOLES NOT BUILT MONOLITHICALLY WITH THE BASE SHALL BE SET INTO A STEEL REINFORCED (#4 @ 12" E.W.) CONCRETE BASE (4,000 PSI) A MINIMUM OF 4 INCHES. IN THIS CASE, THE BASE THICKNESS SHALL BE INCREASED BY 4 INCHES.

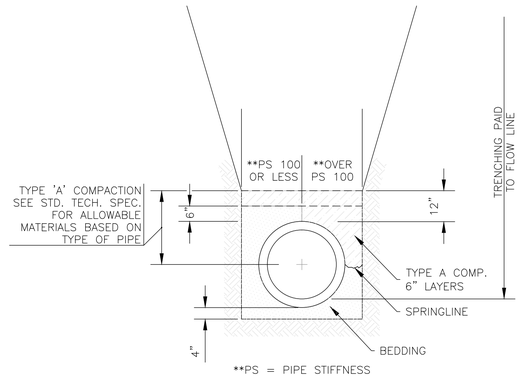

TRENCHING DETAILS

NOTES:

1. THE TRENCH SHALL BE EXCAVATED TO 4" BELOW BOTTOM OF THE PIPE BARREL & BACKFILLED AS SHOWN ABOVE WITH AN APPROVED BEDDING MATERIAL.
2. WHEN THE SEWER IS TO BE INSTALLED IN ROCK, THE TRENCH IS TO BE EXCAVATED TO A MINIMUM DEPTH OF 4" BELOW THE BOTTOM OF THE PIPE AND BACKFILLED IN 6" COMPACTED LAYERS WITH AN APPROVED BEDDING MATERIAL AS SHOWN ABOVE. THE ROCK EXCAVATED TO BE PAID AS A SEPARATE BID ITEM. THE EMBEDMENT, IN ALL CASES, TO BE INCLUDED IN THE PRICE BID PER TRENCH, EXCAVATION, AND BACKFILL.

NOTE: PIPE BLOCKOUT VARIES WITH PIPE SIZE, MATERIAL AND ALIGNMENT AND SHALL ALLOW 3" CLEAR FROM PIPE TO WALL

PRECAST INLET BOX RISER

NOTES:
1. CAST IN PLACE CONC. SHALL BE 4000PSI.
2. PRECAST CONC. SHALL BE 4000 PSI.
3. REINFORCING WIRE SHALL CONFORM TO ASTM A82.
4. REINFORCING BARS SHALL CONFORM TO ASTM A615.
5. GROUT ALL PIPES IN PLACE.
6. GRATES & FRAMES SHALL BE ASTM A36 STEEL COATED WITH BITUMASTIC BLACK SOLUTION (COAL TAR BASE) AS MANUFACTURED BY KOPPERS OR APPROVED EQUAL.
7. THE INLET TOP SHALL SIT SQUARELY ON TOP OF THE INLET BOTTOM SECTION. THE INLET WALLS SHALL NOT BE OFFSET MORE THAN ONE INCH BETWEEN TOP AND BOTTOM SECTIONS.

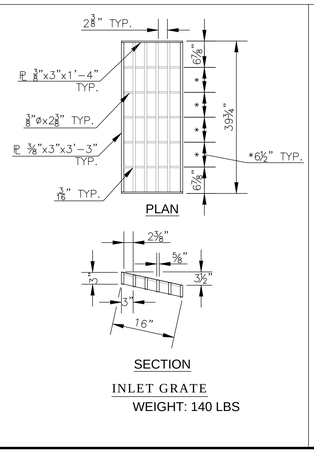

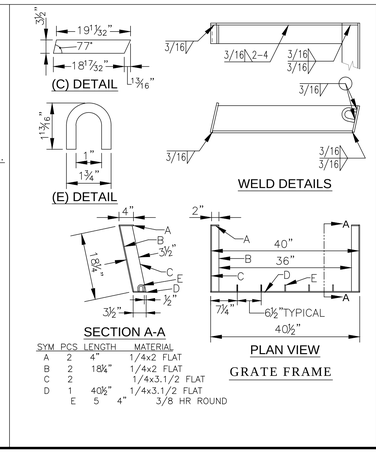

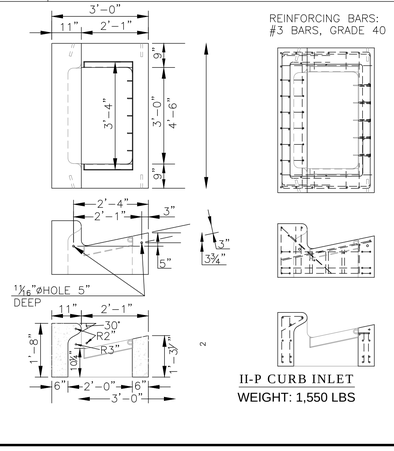

INSTALLATION OF SEWER UNDER EXISTING PAVEMENT

NOTES:
1. THE TRENCH SHALL BE EXCAVATED TO 4" BELOW BOTTOM OF THE PIPE BARREL & BACKFILLED AS SHOWN ABOVE WITH AN APPROVED BEDDING MATERIAL.

2. WHEN THE SEWER IS TO BE INSTALLED IN ROCK, THE TRENCH IS TO BE EXCAVATED TO A MINIMUM DEPTH OF 4" BELOW THE BOTTOM OF THE PIPE AND BACKFILLED IN 6" COMPACTED LAYERS WITH AN APPROVED BEDDING MATERIAL AS SHOWN.

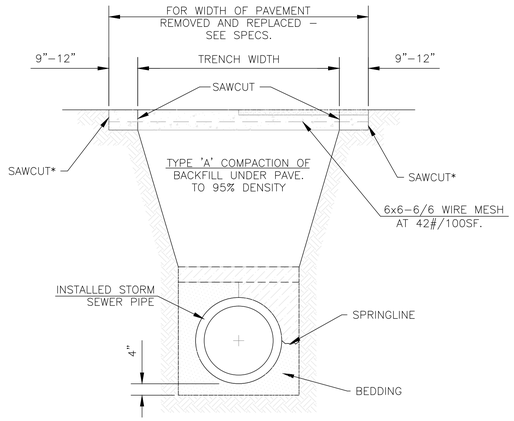

INSTALLATION OF SEWER UNDER EXISTING PAVEMENT

PAVEMENT SHALL BE SAWED AND REMOVED WITHOUT DAMAGE TO ADJACENT PAVEMENT.

* SECOND PAVEMENT CUT TO BE MADE AND PAVEMENT REMOVED AFTER TRENCH IS PROPERLY BACKFILLED.

** CONCRETE PAVEMENT SHALL BE JOINED TO ADJACENT CONCRETE PAVEMENT AS PER "FULL PANEL REPAIR AND UTILITY CUTS FOR CONCRETE PAVEMENT" AS SHOWN ON MISCELLANEOUS DETAILS II.

PAVEMENT PLACEMENT SCHEDULE

SCHEDULE TO BE USED UNLESS OTHERWISE NOTED ON PLANS.

ORIGINAL SURFACE	NEW PAVEMENT
CONCRETE	8" REINFORCED CONCRETE 4,000psi
ASPHALT	MATCH EXISTING PAVEMENT THICKNESS WITH A MINIMUM OF 6" HOT–MIX ASPHALTIC CONCRETE.

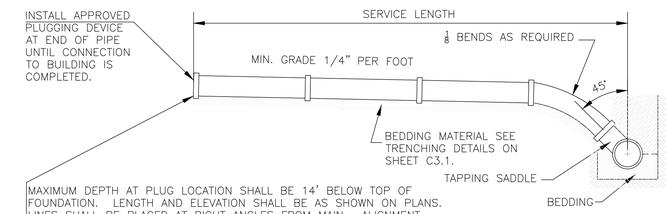

SANITARY SEWER SERVICE CONNECTION DETAIL

HTK ARCHITECTS PA
900 S. KANSAS AVE. TOPEKA, KANSAS 66612 P. 785-266-3273
9300 W. 110TH ST. STE. 150 OVERLAND PARK KANSAS 66210 P. 913-663-3273
WWW.HTKARCHITECTS.NET

KEVIN W. BECK LICENSED 16259 4-15-15 KANSAS PROFESSIONAL ENGINEER

SBB Schmidt, Beck & Boyd Engineering / Surveying
1415 SW Topeka Blvd.
Topeka, KS 66612
Ph: (785) 215-8630

DATE:
- 4-15-15

REVISED DATE:

HTK PROJECT NUMBER:
- 1410.03

Department of Administration
Office of Facilities and
Procurement Management
800 SW Jackson, Suite 700
Topeka, Kansas 66612-1216
Phone 785-296-8899
FAX 785-296-3456

STATE OF KANSAS
STATE OF KANSAS ENERGY & SERVICE CENTER
Seventh & Van Buren Street, Topeka, Kansas
BUILDING NUMBER
1730000038

4-15-15 DRAWN BY: Author CHECKED BY: Checker REV:

SEWER DETAILS

A-012651

C301

CONSTRUCTION DOCUMENTS

JCSBC
2-2-2016
AtL9G.–0013

STANDARDS FOR SETTING LINE AND GRADE FOR SEWER CONSTRUCTION:

1. STAKES, SPIKES, SHINERS, OR CROSSES SET BY TRANSIT AT THE SURFACE ON AN OFFSET FROM THE SEWER CENTER LINE.
2. STAKES ARE TO BE SET IN THE TRENCH BOTTOM ON THE SEWER LINE AS THE ROUGH GRADE FOR SEWER IS COMPLETED.
3. ELEVATIONS GIVEN TO THE FINISHED TRENCH GRADE AND SEWER INVERT, WHILE SEWER LAYING PROGRESSES.

STANDARD METHODS FOR TRANSFERRING LINE AND GRADE TO SEWER TRENCH BOTTOM:

ELECTRONIC LASER EQUIPMENT–STAKING SHALL BE AT 25' INTERVALS FOR THE FIRST 100' AND EVERY 100' THEREAFTER UNTIL THE NEXT MANHOLE IS REACHED.

BATTER BOARDS AND BATTER BOARD SUPPORTS–STAKING SHALL BE EVERY 25'.

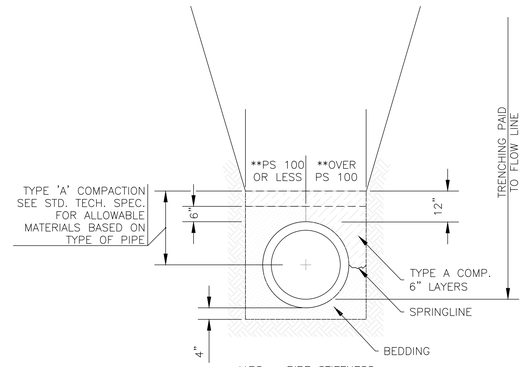

**PS = PIPE STIFFNESS

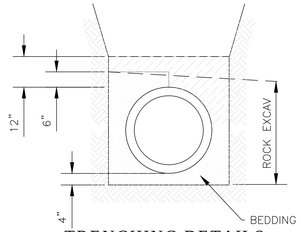

TRENCHING DETAILS

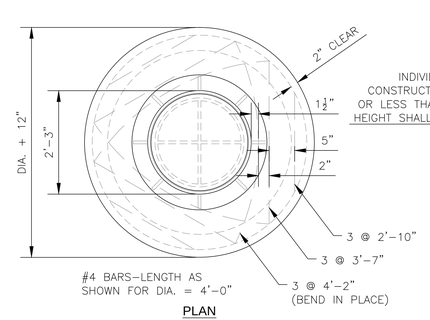

PLAN

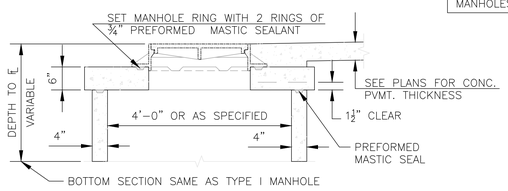

TOP SECTION

STANDARD MANHOLE TYPE II

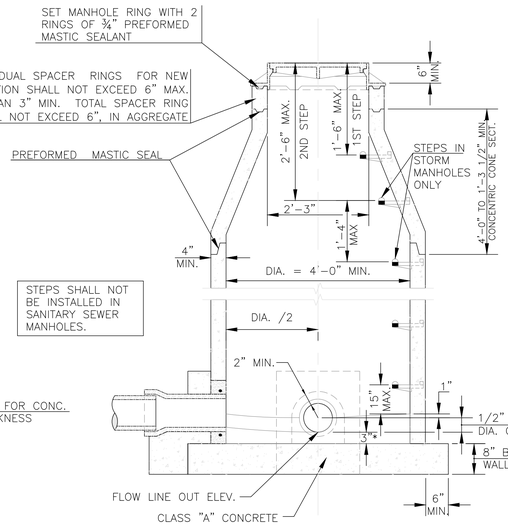

NOTE: THE BOTTOM SECTION OF ALL CAST–IN–PLACE MANHOLES AND PRECAST MANHOLES NOT BUILT MONOLITHICALLY WITH THE BASE SHALL BE SET INTO A STEEL REINFORCED (#4 @ 12" E.W.) CONCRETE BASE (4,000 PSI) A MINIMUM OF 4 INCHES. IN THIS CASE, THE BASE THICKNESS SHALL BE INCREASED TO 12 INCHES.

PRE-CAST STANDARD MANHOLE TYPE I

*THIS 3" TO BE ELIMINATED WHEN PRE–CAST INVERTS ARE USED.

DETAIL OF MANHOLE CASTINGS

CASTINGS SHALL CONFORM TO THE REQUIREMENTS OF "SPECIFICATIONS FOR GRAY IRON CASTINGS" IN ACCORDANCE WITH A.S.T.M. A 48, CLASS 35B.

MINIMUM TENSILE STRENGTH OF EACH CASTING SHALL BE AT LEAST 30,000 PSI.

AVERAGE WT. COVER 185 LBS., RING 220 LBS. VARIATION IN WEIGHT WILL NOT EXCEED THE SPECIFIED WEIGHTS BY MORE THAN 4%.

CASTINGS ARE TO BE MANUFACTURED TRUE TO PATTERN AND WITH SATISFACTORY FIT OF COMPONENT PARTS. CASTINGS SHALL BE FREE OF DEFECTS. DIMENSIONS AS DETAILED ON PLAN SHALL NOT DEVIATE BY MORE THAN 1/16" PER FOOT.

SEATING SURFACES OF CASTINGS SHALL BE MACHINED AS REQUIRED TO PREVENT ROCKING.

ALL CASTINGS SHALL BE FURNISHED IN BARE METAL AND SHALL HAVE MANUFACTURER'S NAME CAST INTO CASTING.

CASTINGS SHALL CONFORM TO THE PROVISIONS OF UNITED STATES CUSTOMS REGULATIONS. CASTING MANUFACTURER SHALL CARRY AT LEAST $3,000,000 PRODUCT LIABILITY INSURANCE.

TO INSURE CONFORMANCE TO TENSILE STRENGTH REQUIREMENTS, THE FOLLOWING PROCEDURE WILL BE FOLLOWED FOR EACH LOT OF CASTINGS USED ON CITY OF TOPEKA PROJECTS.

A. ALL CASTINGS SHALL BE JULIAN HEAT DATED.

B. TWO TEST BAR SPECIMENS MUST BE POURED WHEN PRODUCING CITY OF TOPEKA CASTINGS. TEST BAR SPECIMENS SHALL BE DELIVERED TO PURCHASER.

C. TEST REPORT FROM A CITY APPROVED INDEPENDENT LABORATORY VERIFYING TENSILE STRENGTH CHEMISTRY OR BRINELL HARDNESS SHALL ACCOMPANY EACH SHIPMENT OF CASTINGS. IF REQUESTED TEST REPORT SHALL BE PAID FOR BY THE SUPPLIER. THE HEAT DATE(S) ON CASTINGS SHALL CORRESPOND TO THE TENSILE STRENGTH REPORT(S).

NOTES:

1. THE TRENCH SHALL BE EXCAVATED TO 4" BELOW BOTTOM OF THE PIPE BARREL & BACKFILLED AS SHOWN ABOVE WITH AN APPROVED BEDDING MATERIAL.
2. WHEN THE SEWER IS TO BE INSTALLED IN ROCK, THE TRENCH IS TO BE EXCAVATED TO A MINIMUM DEPTH OF 4" BELOW THE BOTTOM OF THE PIPE AND BACKFILLED IN 6" COMPACTED LAYERS WITH AN APPROVED BEDDING MATERIAL AS SHOWN ABOVE. THE ROCK EXCAVATED TO BE PAID AS A SEPARATE BID ITEM. THE EMBEDMENT, IN ALL CASES, TO BE INCLUDED IN THE PRICE BID PER TRENCH EXCAVATION, AND BACKFILL.

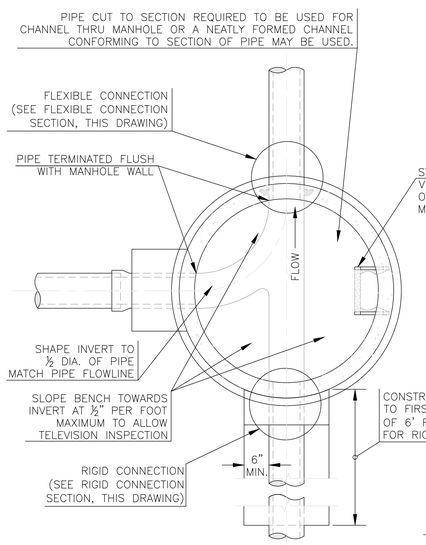

MANHOLE BOTTOM PLAN

NOTE: DEADEND MANHOLES SHALL HAVE A POURED INVERT. MUST USE BOND BREAKER BETWEEN INVERT AND FLOOR.

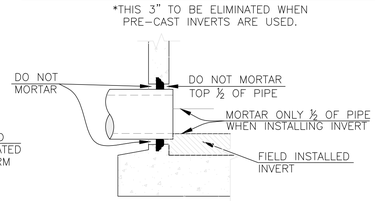

FLEXIBLE CONNECTION SECTION

FLEXIBLE CONNECTIONS SHALL BE USED FOR ALL SEWER PIPE TYPES.

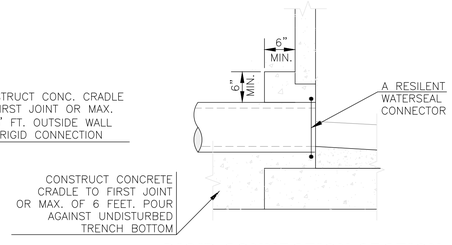

RIGID CONNECTION SECTION

RIGID CONNECTIONS SHALL BE USED FOR CERTAIN EXISTNG MANHOLE CONNECTIONS AT ENGINEER'S DISCRETION.

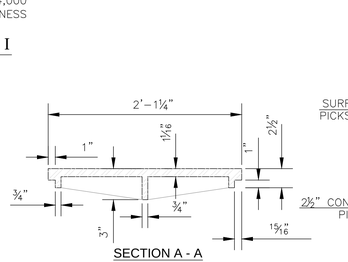

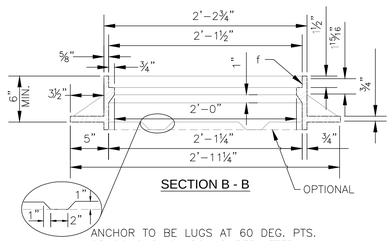

MANHOLE CONSTRUCTION NOTES

ALL MANHOLE CONSTRUCTION SHALL BE WATER TIGHT.

TOP OF 8" FLOOR SLAB TO BE 3" MIN. BELOW FLOW LINE ELEV. OF THE OUTLET PIPE TO INSURE SUFFICIENT MIN. THICKNESS OF SHAPED INVERT.

ALL PRECAST CONCRETE MANHOLE SECTIONS SHALL CONFORM TO A.S.T.M. DESIGNATION C478

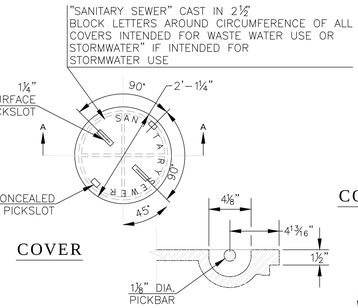

COVER

SURFACE PICKSLOT

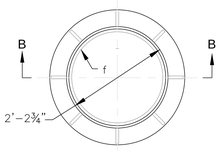

RING

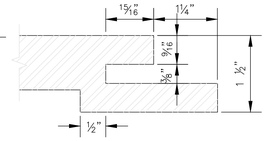

CONCEALED PICKSLOT DETAIL

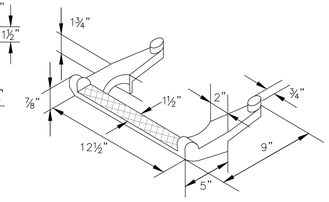

DETAIL OF CAST IRON MANHOLE STEP

(FOR PRECAST MANHOLE TO BE USED IN STORM SEWER SYSTEMS ONLY)

VESTAL MANUFACTURING NO. 918–P, CLAY AND BAILEY NO. 2115, NEENAH NO. R–1981–I OR EQUAL AS FURNISHED BY MANUFACTURER OF PRECAST MANHOLE.

COPOLYMER POLYPROPYLENE PLASTIC STEP, PS1–PF or PS2–PF, MANUFACTURED BY M.A. IND. INC. OR APPROVED EQUAL MAY BE USED AS AN ALTERNATE TO DETAILED CASTING. THIS STEP MAY BE CAST IN PLACE OR INSTALLED IN ACCORDANCE WITH THE MANUFACTURERS RECOMMENDED INSTALLATION PROCEDURE.

HTK ARCHITECTS PA
9300 W. 110TH ST. STE. 150
OVERLAND PARK KANSAS 66210
P. 913.663.5373
900 S. KANSAS AVE.
TOPEKA KANSAS 66612
P. 785.266.3373
WWW.HTKARCHITECTS.NET

KEVIN W. BECK LICENSED 16259 4-15-15 KANSAS PROFESSIONAL ENGINEER

SBB Schmidt, Beck & Boyd Engineering / Surveying
1415 SW Topeka Blvd.
Topeka, KS 66612
Ph: (785) 215-8630

DATE:
- 4-15-15

REVISED DATE:

HTK PROJECT NUMBER:
- 1410.03

Department of Administration
Office of Facilities and
Procurement Management
800 SW Jackson, Suite 700
Topeka, Kansas 66612-1216
Phone 785-296-8899
FAX 785-296-3456

STATE OF KANSAS
STATE OF KANSAS ENERGY & SERVICE CENTER
Seventh & Van Buren Street, Topeka, Kansas

BUILDING NUMBER
1730000038

4-15-15 DRAWN BY: Author CHECKED BY: Checker REV:

MANHOLE DETAILS

A-012651

C302

CONSTRUCTION DOCUMENTS

JCSBC
2-2-2016
AIL9G--0014

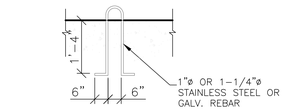

ONE (1) 1"ø FOR 16" AND SMALLER PIPING
TWO (2) 1-1/4"ø FOR 18" AND 24" PIPING

LIFTING HOOK DETAIL

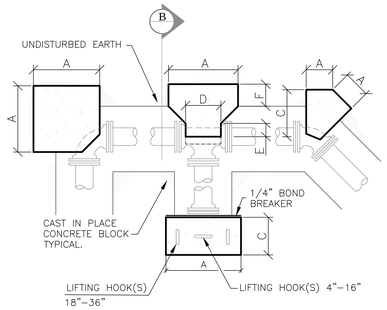

PLAN

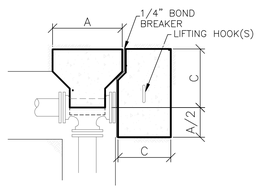

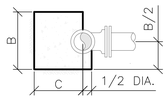

SECTION B

PIPE DIA.	TEES						PLUGS			90° BEND			45° BEND			22.5° BEND			11.25° BEND		
	A	B	C	D	E	F	A	B	C	A	B	C	A	B	C	A	B	C	A	B	C
4"	13	22	9	13	—	—	13	22	9	18	12	9	9	12	12	6	12	12	—	—	—
6"	24	30	16	16	6	6	24	30	12	24	18	16	10	24	12	7	18	12	—	—	—
8"	34	32	21	18	7	6	34	32	18	30	26	21	13	36	18	9	24	18	9	24	18
10"	40	42	23	22	8	6	40	42	24	35	34	24	18	38	27	12	30	27	12	30	27
12"	48	52	27	24	9	6	48	52	24	42	42	30	21	48	33	14	36	30	10	42	24

CONCRETE BLOCKING DETAILS 4" THROUGH 12"

ALL DIMENSIONS ARE IN INCHES.
BLOCKING DESIGNED FOR 150 PSI WORKING PRESSURE AND 1500 PSF SOIL BEARING.
BLOCKING FOR REDUCED BRANCH TEE SHALL BE AS LISTED UNDER TEES AND BRANCH DIAMETER.
MAINTAIN MINIMUM "F" DIMENSION.

NOTE: WHERE APPLICABLE, DO NOT COVER PIPE JOINTS OR BOLTS WITH CONCRETE.

CONCRETE BLOCKING DETAILS

NO SCALE

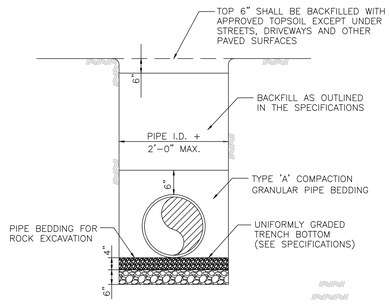

TYPICAL TRENCH & PIPE BEDDING DETAIL

NO SCALE

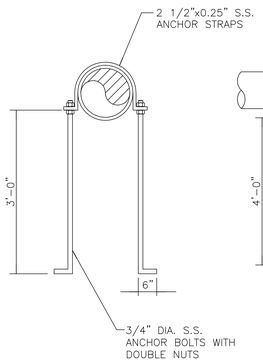

STRAP DETAIL FOR VERTICAL BEND

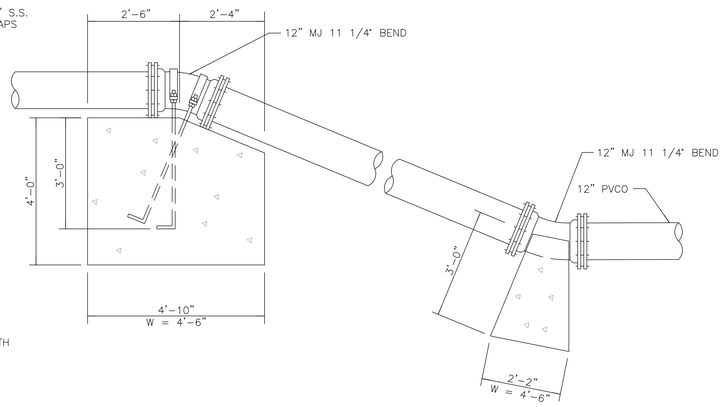

VERTICAL BEND BLOCKING DETAIL

NO SCALE:

HTK ARCHITECTS PA
9300 W. 110TH ST. STE. 150
OVERLAND PARK, KANSAS 66210
P. 913.663.3373
900 S. KANSAS AVE.
TOPEKA, KANSAS 66612
P. 785.266.3373
WWW.HTKARCHITECTS.NET

KEVIN W. BECK
LICENSED
16259
4-15-15
KANSAS
PROFESSIONAL ENGINEER

SBB
Schmidt, Beck & Boyd
Engineering / Surveying
1415 SW Topeka Blvd.
Topeka, KS 66612
Ph: (785) 215-8630

DATE:
- 4-15-15

REVISED DATE:

HTK PROJECT NUMBER:
- 1410.03

Department of Administration
Office of Facilities and
Procurement Management
800 SW Jackson, Suite 700
Topeka, Kansas 66612-1216
Phone 785-296-8899
FAX 785-296-3456

STATE OF KANSAS
STATE OF KANSAS ENERGY & SERVICE CENTER
Seventh & Van Buren Street, Topeka, Kansas
BUILDING NUMBER
17300-00038
4-15-15 DRAWN BY: Author CHECKED BY: Checker REV:

WATER DETAILS

A-012651

C303

CONSTRUCTION
DOCUMENTS

JCSBC
2-2-2016
Att.9G.--0015

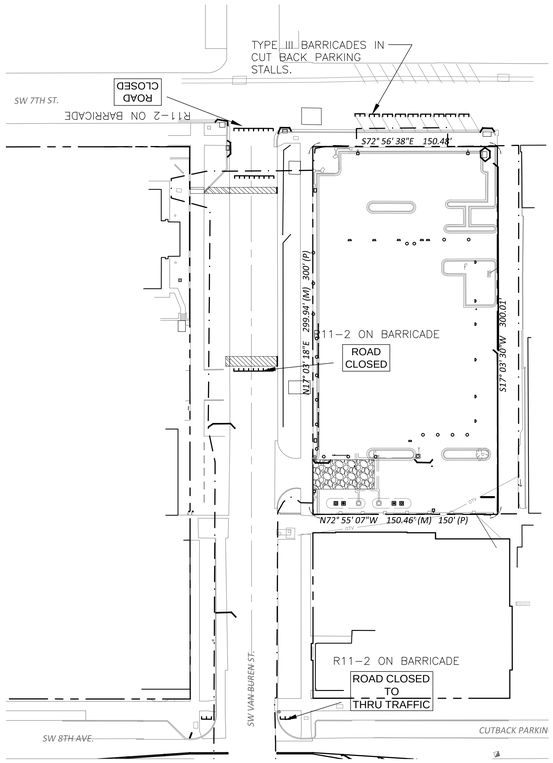

PHASE IB - SW VAN BUREN ST.

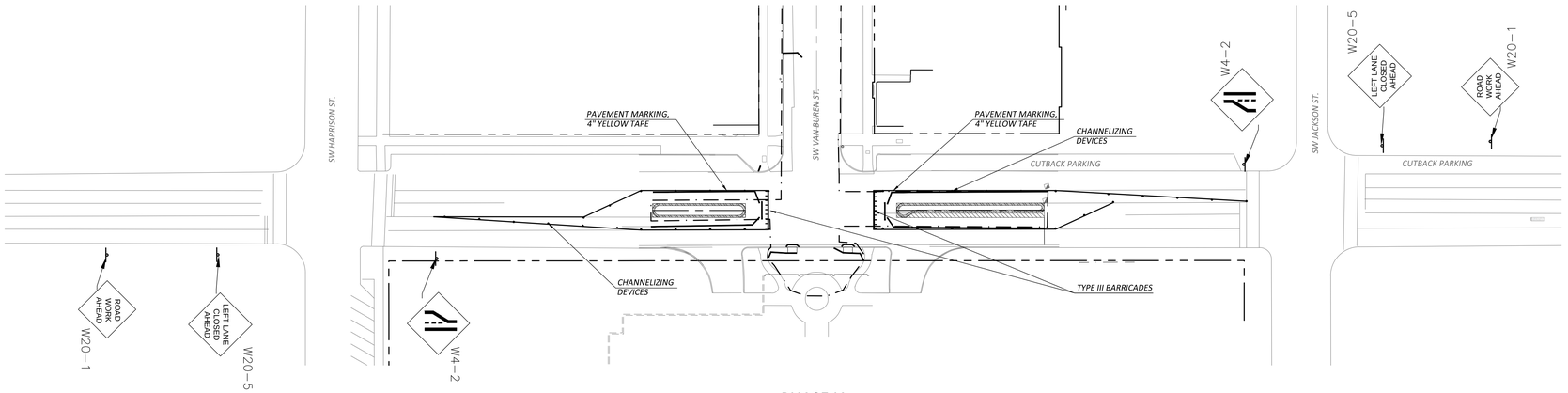

PHASE IA

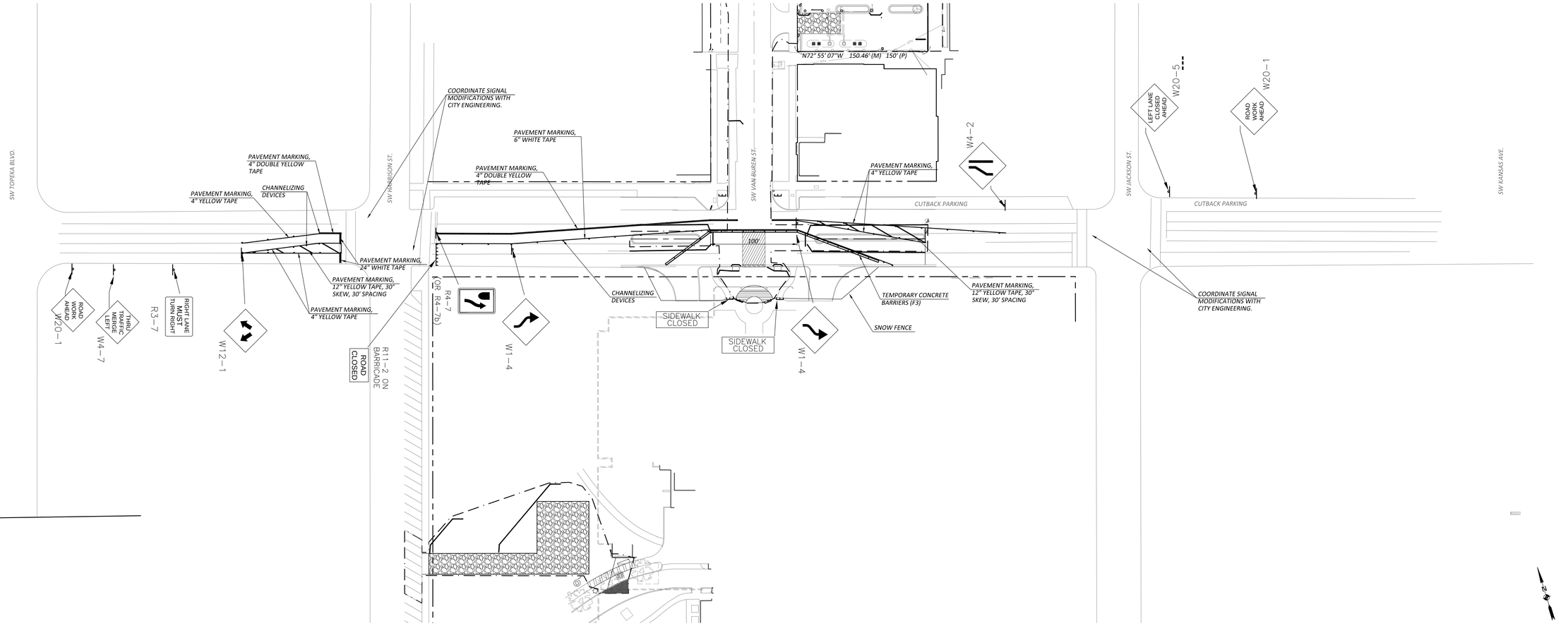

PHASE IB - SW 8TH AVE.

PHASING NOTES:

PHASE I: *SEE SHEET C050 FOR PHASE IA & PHASE IB CONSTRUCTION ACTIVITIES.*

THIS TRAFFIC CONTROL PLAN IS PROVIDED FOR GUIDANCE. THE CONTRACTOR SHALL PROVIDE ALL TRAFFIC CONTROL FOR STREETS AND SIDEWALKS IN ACCORDANCE WITH THE CITY OF TOPEKA STANDARD DETAILS AND LATEST EDITION OF THE MANUAL OF UNIFORM TRAFFIC CONTROL DEVICES. SEE THE STANDARD DRAWINGS FOR SPACING AND ADDITIONAL SIGNAGE.

THE CONTRACTOR SHALL PROVIDE THE CITY OF TOPEKA ENGINEERING DIVISION WITH THE FINAL TRAFFIC CONTROL PLAN BASED ON FINAL PHASING OF CONSTRUCTION. THE PLAN SHALL BE APPROVED BY THE CITY ENGINEERING DEPARTMENT PRIOR TO BEGINNING CONSTRUCTION.

THE CONTRACTOR SHALL INCLUDE ALL NECESSARY SIDEWALK CLOSURE TRAFFIC CONTROL DEVICES PER CITY STANDARDS.

THE CONTRACTOR SHALL COORDINATE TEMPORARY SIGNAL MODIFICATIONS AT SW 8TH & SW HARRISON INTERSECTION AND SW 8TH & SW JACKSON INTERSECTION AS NECESSARY.

THE CONTRACTOR SHALL PROVIDE ADEQUATE CONSTRUCTION FENCING AND PROTECTION OF THE PROJECT SITE TO PROMOTE THE SAFETY AND SECURITY OF THE CONSTRUCTION FORCES AS WELL AS THE PUBLIC. THIS INCLUDES PROTECTION FOR VEHICULAR, PEDESTRIAN AND OTHER MODES OF TRANSIT.

HTK ARCHITECTS PA
900 S. KANSAS AVE. TOPEKA KANSAS 66612 P. 785-266-3323
9300 W. 110TH ST. STE. 150 OVERLAND PARK KANSAS 66210 P. 913-663-3323
WWW.HTKARCHITECTS.NET

KEVIN W. BECK LICENSED PROFESSIONAL ENGINEER 16259 4-15-15 KANSAS

SBB Schmidt, Beck & Boyd Engineering / Surveying
1415 SW Topeka Blvd.
Topeka, KS 66612
Ph: (785) 215-8630

DATE: 4-15-15

REVISED DATE:

HTK PROJECT NUMBER: 1410.03

Department of Administration
Office of Facilities and
Procurement Management
800 SW Jackson, Suite 700
Topeka, Kansas 66612-1216
Phone 785-296-8899
FAX 785-296-3456

STATE OF KANSAS
STATE OF KANSAS ENERGY & SERVICE CENTER
Seventh & Van Buren Street, Topeka, Kansas
BUILDING NUMBER
17300-00038

4-15-15 DRAWN BY: Author CHECKED BY: Checker REV:

TRAFFIC CONTROL PLAN
PHASE IA & IB

A-012651

C400

CONSTRUCTION DOCUMENTS

JCSBC
2-2-2016
Att.9G.--0016

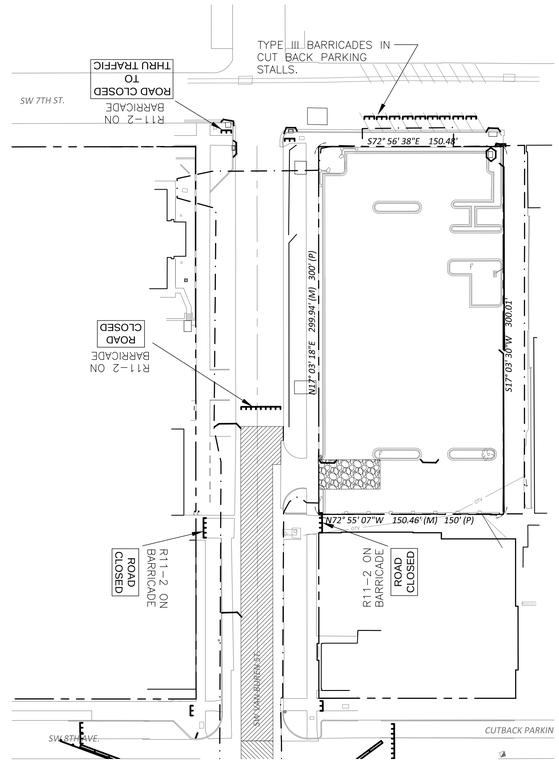

PHASE II - SW VAN BUREN ST.

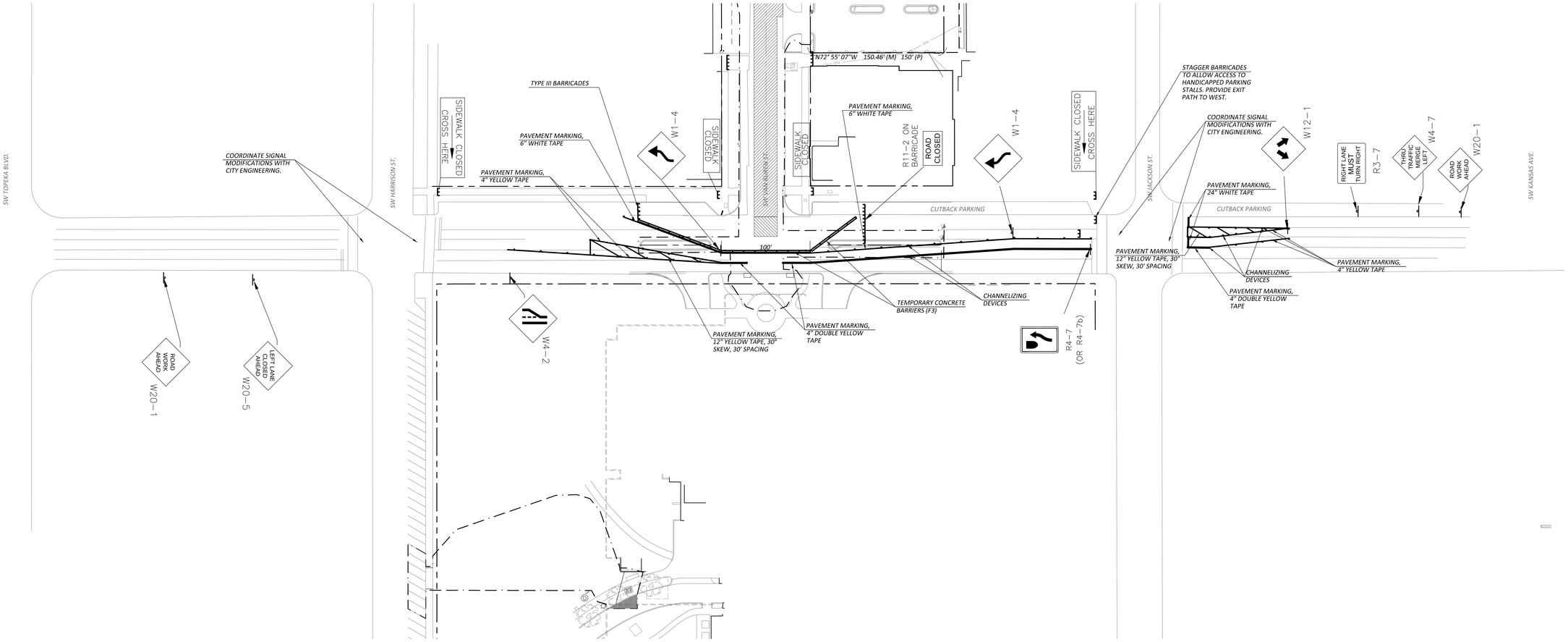

PHASE II - SW 8TH AVE.

Horz.: 1"=50'
0 50'

PHASING NOTES:

PHASE I: SEE SHEET C050 FOR PHASE IA & PHASE IB CONSTRUCTION ACTIVITIES.

THIS TRAFFIC CONTROL PLAN IS PROVIDED FOR GUIDANCE. THE CONTRACTOR SHALL PROVIDE ALL TRAFFIC CONTROL FOR STREETS AND SIDEWALKS IN ACCORDANCE WITH THE CITY OF TOPEKA STANDARD DETAILS AND LATEST EDITION OF THE MANUAL OF UNIFORM TRAFFIC CONTROL DEVICES. SEE THE STANDARD DRAWINGS FOR SPACING AND ADDITIONAL SIGNAGE.

THE CONTRACTOR SHALL PROVIDE THE CITY OF TOPEKA ENGINEERING DIVISION WITH THE FINAL TRAFFIC CONTROL PLAN BASED ON FINAL PHASING OF CONSTRUCTION. THE PLAN SHALL BE APPROVED BY THE CITY ENGINEERING DEPARTMENT PRIOR TO BEGINNING CONSTRUCTION.

THE CONTRACTOR SHALL INCLUDE ALL NECESSARY SIDEWALK CLOSURE TRAFFIC CONTROL DEVICES PER CITY STANDARDS.

THE CONTRACTOR SHALL COORDINATE TEMPORARY SIGNAL MODIFICATIONS AT SW 8TH & SW HARRISON INTERSECTION AND SW 8TH & SW JACKSON INTERSECTION AS NECESSARY.

THE CONTRACTOR SHALL PROVIDE ADEQUATE CONSTRUCTION FENCING AND PROTECTION OF THE PROJECT SITE TO PROMOTE THE SAFETY AND SECURITY OF THE CONSTRUCTION FORCES AS WELL AS THE PUBLIC. THIS INCLUDES PROTECTION FOR VEHICULAR, PEDESTRIAN AND OTHER MODES OF TRANSIT.

HTK ARCHITECTS PA
9300 W. 110TH ST. STE. 150
OVERLAND PARK, KANSAS 66210
P. 913.663.5373
WWW.HTKARCHITECTS.NET
900 S. KANSAS AVE.
TOPEKA, KANSAS 66612
P. 785.266.3373

KEVIN W. BECK
LICENSED
16259
4-15-15
KANSAS
PROFESSIONAL ENGINEER

SBB
Schmidt, Beck & Boyd
Engineering / Surveying
1415 SW Topeka Blvd.
Topeka, KS 66612
Ph: (785) 215-8630

DATE: 4-15-15

REVISED DATE:

HTK PROJECT NUMBER: 1410.03

Department of Administration
Office of Facilities and
Procurement Management
800 SW Jackson, Suite 700
Topeka, Kansas 66612-1216
Phone 785-296-8899
FAX 785-296-3456

STATE OF KANSAS
STATE OF KANSAS ENERGY & SERVICE CENTER
Seventh & Van Buren Street, Topeka, Kansas
BUILDING NUMBER
17300-00038

4-15-15 DRAWN BY: Author CHECKED BY: Checker REV:

TRAFFIC CONTROL PLAN
PHASE II

A-012651

C401

CONSTRUCTION DOCUMENTS

JCSBC
2-2-2016
Att.9G.--0017

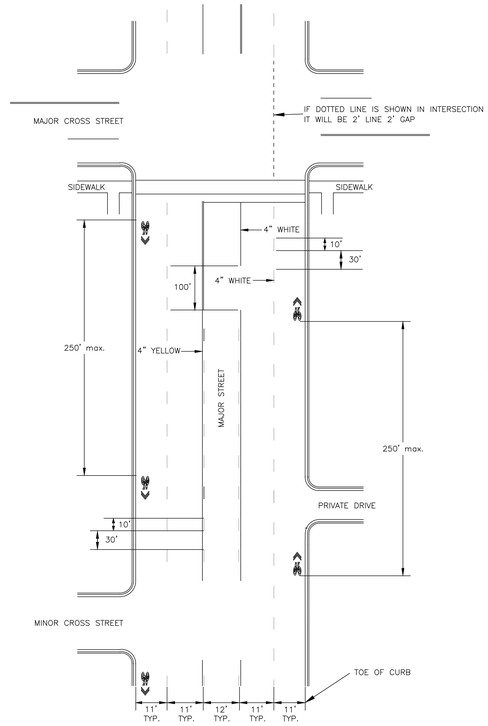

TYPICAL PAVEMENT MARKING DETAIL

SHARROW – WHEN THERE IS NO PARKING, DISTANCE FROM FACE OF CURB TO CENTER OF SHARROW IS 5 FEET. WHEN PARKING IS PRESENT DISTANCE FROM FACE OF CURB TO CENTER OF SHARROW IS 11'.

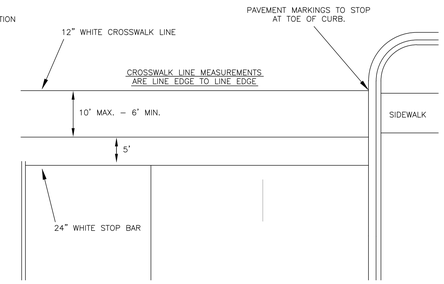

CROSSWALK MARKING DETAIL

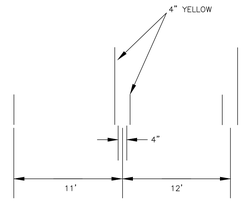

TYPICAL LANE WIDTH MEASUREMENTS ARE – CENTER OF SKIP LINE TO CENTER OF THE SOLID/SKIP LINES. TWO WAY CENTER TURN LANE LINES SHOULD BE CENTER OF SOLID/SKIP TO CENTER OF SOLID/SKIP LINES

LANE LINE MEASUREMENT DETAIL

GENERAL NOTES:

EXCEPT AS NOTED BELOW PAVEMENT MARKINGS ARE REQUIRED TO COMPLY WITH KDOT AND CITY SPECIFICATIONS.

EQUIPMENT – USE EQUIPMENT DESIGNED FOR THE PREPARATION OF THE APPROPRIATE TYPE OF PAVEMENT MARKING MATERIAL.

SURFACE PREPARATION – ON EXISTING PAVEMENTS, REMOVE THE EXISTING PAVEMENT MARKINGS ACCORDING TO RECOMMENDATIONS OF THE MANUFACTURER OF THE NEW MARKINGS.

ON AGED ASPHALT PAVEMENTS, THOROUGHLY REMOVE ALL DIRT, GRIT, GREASE, RESIDUE OF PRIOR PAVEMENT MARKINGS APPLICATION (INCLUDING ADHESIVES OR PRIMERS THAT MAY HAVE BEEN USED IN THEIR APPLICATION), AND ANY OTHER FOREIGN MATTER FROM THE ROADWAY SURFACE PRIOR TO THE APPLICATION OF THE NEW MARKINGS.

ON NEW PORTLAND CEMENT CONCRETE PAVEMENT AND NEW CONCRETE BRIDGE DECKS USE SHOT BLASTING TO REMOVE CURING COMPOUND AND LAITANCE FROM THE SURFACES TO WHICH THE PAVEMENT MARKINGS WILL BE APPLIED.

ALIGNMENT – LAYOUT THE PAVEMENT MARKINGS AS DETAILED IN THE PLANS. IF THE PLANS DO NOT PROVIDE DETAILS, SUBMIT TO THE ENGINEER FOR APPROVAL A LAYOUT PLAN FOR THE PAVEMENT MARKINGS THAT COMPLY WITH THE 2009 MUTCD.

PROVIDE ADEQUATE GUIDE MARKS – APPROXIMATELY 2" BY 12" AT APPROXIMATELY 30 TO 50 FOOT INTERVALS – FOR THE APPLICATION OF THE MARKINGS.

APPLY MARKINGS STRAIGHT AND CLOSE TO THE INTENDED ALIGNMENT WITHOUT ABRUPT CHANGES THAT RESULT IN AN UNACCEPTABLE APPEARANCE. LINES THAT DEVIATE LATERALLY FROM THE INTENDED ALIGNMENT MORE THAN 2' IN 200' MAY BE REJECTED.

APPLICATION – PROVIDE THE CITY INSPECTOR WITH A COPY OF THE MANUFACTURER'S APPLICATION INSTRUCTIONS. APPLY THE MARKINGS ACCORDING TO THE RECOMMENDATIONS. FOLLOW THE RECOMMENDATIONS REGARDING PAVEMENT AND AMBIENT TEMPERATURES. THE CITY INSPECTOR WILL VERIFY THE PAVEMENT AND AMBIENT TEMPERATURES BEFORE BEGINNING WORK AND WHEN DEEMED NECESSARY.

TAPES SHALL BE INLAID IN ASPHALT. OTHER PERMANENT MARKINGS SHALL BE INSTALLED IMMEDIATELY AFTER OVERLAYING UNLESS PRIOR APPROVAL IS RECEIVED BY THE ENGINEER OR THE CITY INSPECTOR. IF THE PAVEMENT MARKINGS CANNOT BE INSTALLED AND THUS THE ROADWAY WOULD BE UNMARKED OVERNIGHT, INTERIM REMOVABLE MARKINGS SHALL BE INSTALLED AND REMAIN UNTIL THE PERMANENT MARKINGS CAN BE INSTALLED. THE CONTRACTOR SHALL MAKE EVERY EFFORT TO REMOVE THE INTERIM MARKINGS AND INSTALL THE PERMANENT MARKINGS WITHIN 48 HOURS. UNDER NO CIRCUMSTANCE SHALL THE INTERIM PAVEMENT MARKINGS BE IN PLACE FOR MORE THAN 14 DAYS. THE INTERIM REMOVABLE MARKINGS SHALL BE REMOVED PRIOR TO THE INSTALLATION OF THE PERMANENT PAVEMENT MARKINGS.

REMOVE AND REPLACE NEWLY INSTALLED PAVEMENT MARKINGS THAT HAVE DRAG MARKS, GASHES, GOUGES, FOREIGN COVERING, DISCOLORED AREA OR AREAS THAT HAVE FAILED TO SOLIDIFY, HAVE IMPROPER ADHESION OR THICKNESS.

ON NEW PORTLAND CEMENT CONCRETE, LANES CANNOT BE OPEN UNTIL INTERIM OR PERMANENT MARKINGS ARE IN PLACE. INTERIM MARKINGS CANNOT BE LEFT IN PLACE MORE THAN 14 DAYS AND MUST BE REMOVED WHEN PERMANENT MARKINGS ARE INSTALLED.

PERFORMANCE MEASURES – LACK OF SPECIFIED LENGTH/CYCLE: LANE LINES ARE EXPECTED TO TO BE 10' LONG; GAPS ARE EXPECTED TO BE 30' IN LENGTH. PAYMENT SHALL BE MADE WITH PENALTY BEING EQUAL TO 25% OF THE UNIT PRICE BID PER FOOT FOR EACH 2" OF LENGTH LACKING OR EXCEEDING THE 10'/30' CRITERIA NOTED ABOVE. SHOULD LINE OR GAP BE LACKING OR EXCEEDING 12" THE CITY WILL EITHER NOT PAY FOR THE MARKINGS (100% PENALTY) OR REQUIRE THEY BE REMOVED AND REINSTALLED. TO CLARIFY, EXAMPLE, SHOULD A REQUIRED 10' LINE BE MEASURED AT 10'–3" THE CONTRACTOR WILL BE PAID FOR 75% FOR THE ENTIRE 10'. SHOULD A SPACE BE 30'–3", THE CONTRACTOR WILL BE PAID FOR 75% OF THE 10' LINE. PENALTIES WILL BE APPLIED UNTIL THE MARKINGS RESUME THE 10'/30' REQUIREMENT.

LACK OF SPECIFIED WIDTH: MARKINGS SHALL BE AT LEAST AS SPECIFIED ON THE PLANS. SHOULD MARKINGS BE 1/2" LESS THAN NOTED, THE CITY WILL DIRECT THE CONTRACTOR TO REDO OR 25% OF PAYMENT WILL BE WITHHELD.

WARRANTY – AT THE END OF ONE YEAR WARRANTY PERIOD, THE CONTRACTOR WILL BE REQUIRED TO REPLACE MISSING OR DEFECTIVE MARKINGS.

NO.	DATE:	REVISION	BY:	APP'D
1	01/30/12	UPDATE SPECIFICATIONS	KAP	LGV

DRAWN BY: K.PELTON
APP'D BY: Linda M. Gaul

TOPEKA Public Works
ENGINEERING
620 SE MADISON STREET - 2nd FLR. - TOPEKA, KS 66607
Phone: (785) 368-3842 - Fax: (785) 368-3881

PAVEMENT MARKINGS

DATE:
PAGE: OF
DRAWING: DT-116
PROJ.

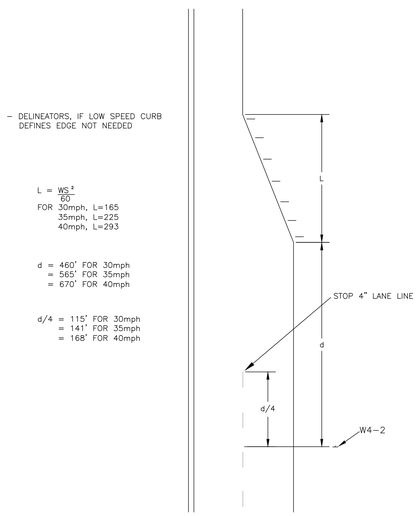

LANE REDUCTION TRANSITION MARKING

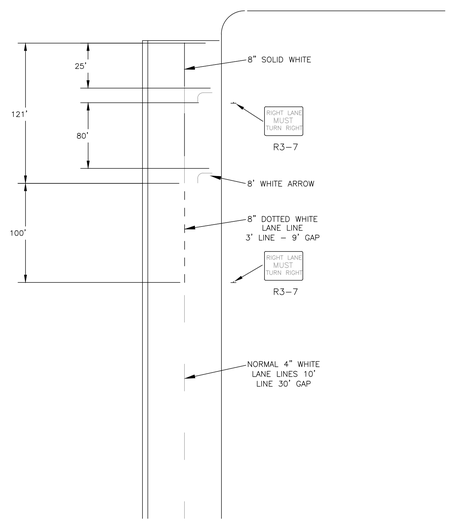

LANE DROP - WHEN THRU LANE BECOMES MANDATORY TURN LANE

NO.	DATE:	REVISION	BY:	APP'D
1	01/30/12	UPDATE SPECIFICATIONS	KAP	LGV

DRAWN BY: K.PELTON
APP'D BY: Linda M. Gaul

TOPEKA Public Works
ENGINEERING
620 SE MADISON STREET - 2nd FLR. - TOPEKA, KS 66607
Phone: (785) 368-3842 - Fax: (785) 368-3881

PAVEMENT MARKING

DATE:
PAGE: OF
DRAWING: DT-117
PROJ.

HTK ARCHITECTS PA
9300 W. 110TH ST. STE. 150
OVERLAND PARK KANSAS 66210
P: 913.663.5373
900 S. KANSAS AVE.
TOPEKA KANSAS 66612
P: 785.266.3373
WWW.HTKARCHITECTS.NET

KEVIN W. BECK
LICENSED
PROFESSIONAL ENGINEER
16259
4-15-15
KANSAS

SBB Schmidt, Beck & Boyd Engineering / Surveying
1415 SW Topeka Blvd.
Topeka, KS 66612
Ph: (785) 215-8630

DATE:
● 4-15-15

REVISED DATE:
●
●
●
●

HTK PROJECT NUMBER:
● 1410.03

Department of Administration
Office of Facilities and
Procurement Management
800 SW Jackson, Suite 700
Topeka, Kansas 66612-1216
Phone 785-296-8899
FAX 785-296-3456

STATE OF KANSAS
STATE OF KANSAS ENERGY & SERVICE CENTER
Seventh & Van Buren Street, Topeka, Kansas
BUILDING NUMBER
17300-00038
4-15-15 DRAWN BY: Author CHECKED BY: Checker REV:

TRAFFIC CONTROL DETAILS I

A-012651

C402

CONSTRUCTION DOCUMENTS

JCSBC
2-2-2016
Att.9G.--0018

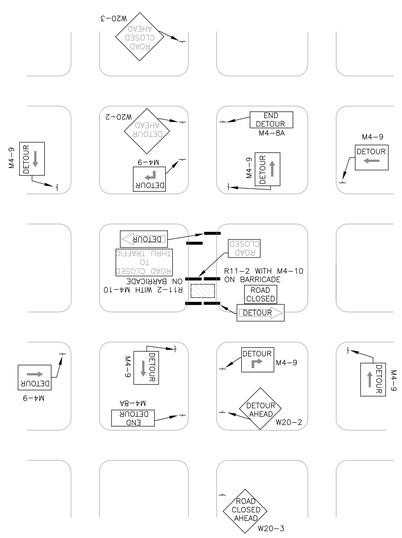

DETOUR SIGNING-STREET CONSTRUCTION IN A STREET GRID

STREET NAME SIGN (D-3) TO BE PLACED ABOVE THE DETOUR SIGN (M4-9) TO INDICATE THE NAME OF THE ROADWAY FOR WHICH THE DETOUR WAS ESTABLISHED.

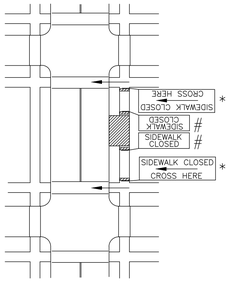

MID-BLOCK SIDEWALK CLOSURE WITH PEDESTRIAN DETOUR

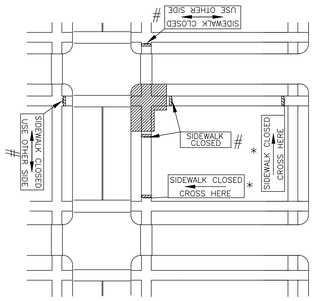

CORNER SIDEWALK CLOSURE WITH PEDESTRIAN DETOUR

* ADVANCE SIGNS TO BE PLACED ON TYPE I OR TYPE II BARRICADES. PLACE SO THAT AT LEAST 48" OF SIDEWALK IS AVAILABLE FOR PEDESTRIAN USE.

\# SIGNS TO BE PLACED ON CONTINUOUS DETECTABLE DEVICES. DEVICE CAN BE TYPE I, TYPE II, TYPE III OR OTHER TYPE WALLS OR RAILS AS PER MUTCD. THEY WILL HAVE ORANGE AND WHITE STRIPES. THE BOTTOM EDGING WILL BE AT LEAST 6 INCHES IN WIDTH AND PLACED A MAXIMUM OF 2 1/2 INCHES ABOVE THE SIDEWALK, SO AS TO BE DETECTABLE BY PEDESTRIANS WITH LONG CANE.

FORMULAS FOR DETERMINING TAPER LENGTH

SPEED (S)	TAPER LENGTH (L) IN FEET
40 MPH OR LESS	$L = \frac{WS^2}{60}$
45 MPH OR MORE	$L = WS$

WHERE: L = TAPER LENGTH IN FEET
W = WIDTH OF OFFSET IN FEET
S = POSTED SPEED LIMIT PRIOR TO WORK STARTING

SPEED LIMIT	TAPER (L)	SIGN SPACING (X)
20	80'	100'
25	125'	100'
30	180'	100'
35	245'	100'
40	320'	100'
45	540'	350'

BASED ON W=12'

EXCEPT AS NOTED (DOWNSTREAM TAPER, FLAGGER OPERATIONS, YIELD OPERATION), SPACE CHANNELIZER @ SPEED LIMIT. IF SPEED LIMIT IS 40mph SET DEVICES AT 40'.

GENERAL NOTES:

ALL DEVICES SHALL COMPLY WITH THE 2009 EDITION OF THE MANUAL ON UNIFORM TRAFFIC CONTROL DEVICES (MUTCD).

72-HOUR NOTICE TO CITY IS REQUIRED BEFORE WORK IS STARTED. CONTACT 785-368-3842 FOR TRAFFIC DISRUPTION PERMIT.

72-HOUR NOTICE IS REQUIRED IF TRAFFIC SIGNALS ARE TO BE MODIFIED AS PART OF TRAFFIC CONTROL. CONTACT 785-368-3913.

UNLESS OTHERWISE NOTED, ALL TRAFFIC CONTROL DEVICES SHALL BE PROVIDED AND MAINTAINED BY THE CONTRACTOR.

SIGNS AND TRAFFIC CONTROL DEVICES NEED TO BE PROPERLY MAINTAINED FOR CLEANLINESS, VISIBILITY, AND CORRECT POSITIONING.

CONTRACTOR SHALL OBTAIN UTILITY LOCATES PRIOR TO INSTALLING SIGNPOSTS.

SIGNS LEFT IN PLACE THREE OR FEWER DAYS CAN BE MOUNTED AT ONE FOOT. SIGNS LEFT IN PLACE GREATER THAN THREE DAYS NEED TO BE MOUNTED AT SEVEN FEET. IF THERE ARE NO SIDEWALKS, NO PEDESTRIANS, AND NO PARKING, MOUNTING MOUNTING HEIGHT CAN BE REDUCED TO FIVE FEET. IF SECONDARY SIGN IS NEEDED MINIMUM MOUNTING HEIGHT MAY BE ONE FOOT LOWER.

ALL SIGNS SHALL TO BE REMOVED, COVERED, OR TURNED AWAY FROM TRAFFIC WHEN NOT IN USE.

CONTRACTOR MAY BE REQUIRED TO ADD SNOW FENCE TO PROHIBIT PEDESTRIANS FROM ENTERING THE WORK AREA. FENCING SHOULD NOT CREATE A SIGHT DISTANCE RESTRICTION FOR ROAD USERS.

ALL WORKERS SHALL WEAR HIGH VISIBILITY APPAREL MEETING ANSI 107-2004 CLASS 2 OR 3.

TRAFFIC CONTROL DEVICES SHALL MEET NCHRP REPORT 350 (AND SUPPLEMENTS) OR MASH 2009. NCHRP TESTED DEVICES ARE GRANDFATHERED. NEW DEVICES WILL BE MASH 2009 TESTED.

WHEN ROAD WORK CREATES A DIFFERENCE IN ELEVATION BETWEEN ADJACENT LANES THAT ARE OPEN TO TRAVEL, UNEVEN LANE SIGNS, (W8-11) 36"x36" SHALL BE ADDED. THEY SHALL BE PLACED AT BEGINNING AND AT INTERVALS EQUAL TO APPROXIMATELY 1000', BOTH DIRECTIONS IF APPLICABLE.

A BUMP SIGN (W8-1) 36"X36" SHALL BE INSTALLED TO GIVE WARNING OF A 2" OR MORE RISE OR DEPRESSION IN THE PROFILE OF THE ROADWAY. USE AT BEGINNING AND END OF MILLING EVEN IF WEDGE IS IN PLACE.

LEGEND

- = SIGN
- = TYPE III BARRICADE
- = REFLECTORIZED DRUMS OR FLUORESCENT ORANGE CONES OR SLIMLINE CHANNELIZERS
- = ARROW PANEL BOARD
- = WORK SPACE
- = FLAGGER

NO.	DATE:	REVISION	BY:	APP'D
2	02/27/12	ADD ADA DETECTABLE WARNING NOTES	KAP	LGV
1	01/30/12	UPDATE SPECIFICATIONS	KAP	LGV

DRAWN BY: K.PELTON
APP'D BY: Linda Vogt

TOPEKA Public Works ENGINEERING
620 SE MADISON STREET - 2nd FLR. - TOPEKA, KS 66607
Phone: (785) 368-3842 - Fax: (785) 368-3881

TRAFFIC CONTROL

DATE:
PAGE: OF
DRAWING: DT-118
PROJ.

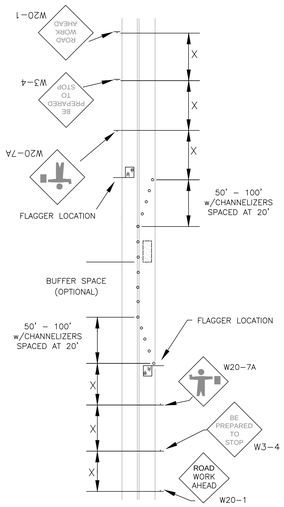

LANE CLOSURE ON TWO-LANE ROAD W/ FLAGGER, DAYTIME ONLY

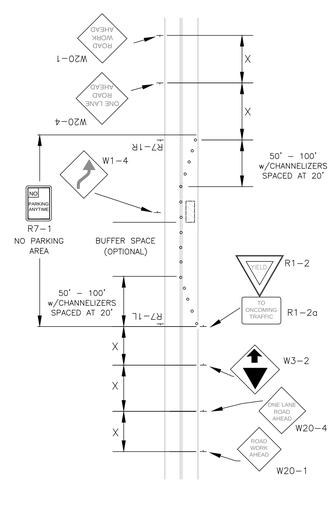

LANE CLOSURE ON TWO-LANE ROAD WITH LOW TRAFFIC VOLUMES (PRIOR APPROVAL REQUIRED)

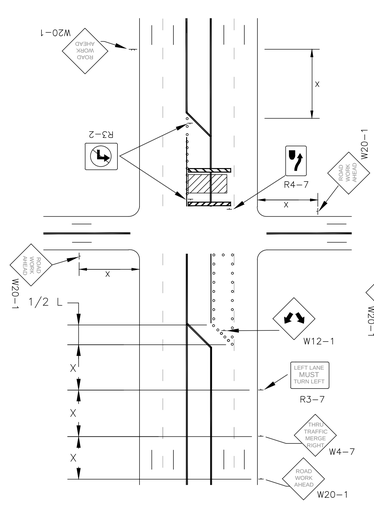

MULTIPLE LANE CLOSURE AT AN INTERSECTION

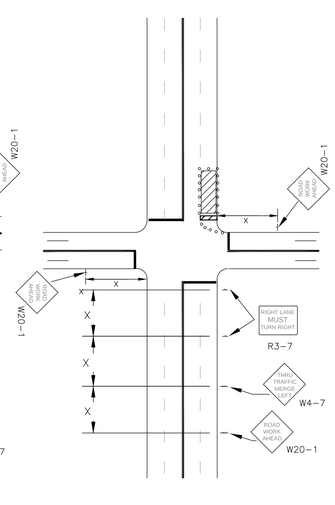

RIGHT -HAND LANE CLOSURE ON THE FAR SIDE OF AN INTERSECTION

NO.	DATE:	REVISION	BY:	APP'D
1	01/30/12	UPDATE SPECIFICATIONS	KAP	LGV

DRAWN BY: K.PELTON
APP'D BY: Linda Vogt

TOPEKA Public Works ENGINEERING
620 SE MADISON STREET - 2nd FLR. - TOPEKA, KS 66607
Phone: (785) 368-3842 - Fax: (785) 368-3881

TRAFFIC CONTROL

DATE:
PAGE: OF
DRAWING: DT-119
PROJ.

HTK ARCHITECTS PA
900 S. KANSAS AVE. TOPEKA KANSAS 66612 P. 785-266-3373
9300 W. 110TH ST. STE. 150 OVERLAND PARK KANSAS 66210 P. 913-663-3373
WWW.HTKARCHITECTS.NET

KEVIN W. BECK LICENSED 16259 4-15-15 KANSAS PROFESSIONAL ENGINEER

SBB Schmidt, Beck & Boyd Engineering / Surveying
1415 SW Topeka Blvd.
Topeka, KS 66612
Ph: (785) 215-8630

DATE:
● 4-15-15

REVISED DATE:
●
●
●
●
●

HTK PROJECT NUMBER:
● 1410.03

Department of Administration
Office of Facilities and
Procurement Management
800 SW Jackson, Suite 700
Topeka, Kansas 66612-1216
Phone 785-296-8899
FAX 785-296-3456

STATE OF KANSAS
STATE OF KANSAS ENERGY & SERVICE CENTER
Seventh & Van Buren Street, Topeka, Kansas
BUILDING NUMBER
17300.00038

4-15-15 DRAWN BY: Author CHECKED BY: Checker REV:

TRAFFIC CONTROL DETAILS II

A-012651

C403

CONSTRUCTION DOCUMENTS

JCSBC
2-2-2016
Att.9G.-0019

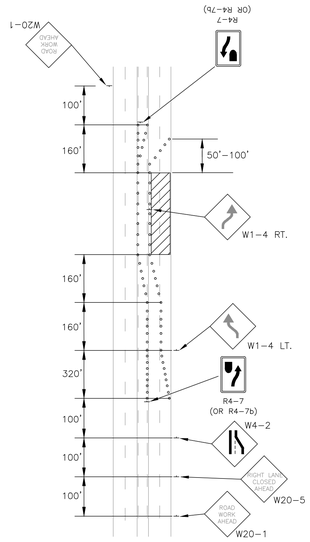

FIVE LANE ROADWAY
w/ TWO LANES CLOSED

(BASED ON SPEED LIMIT OF 40mph
AND LANE WIDTH OF 12')

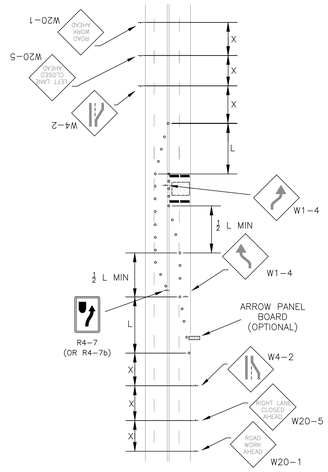

4-LANE UNDIVIDED ROADWAY-HALF
ROADWAY IS CLOSED

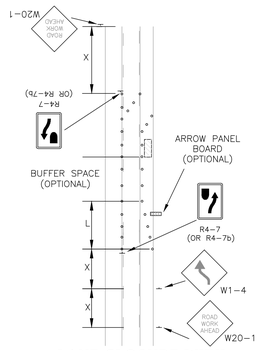

LANE CLOSURE WITH
TWO-WAY
LEFT TURN LANE

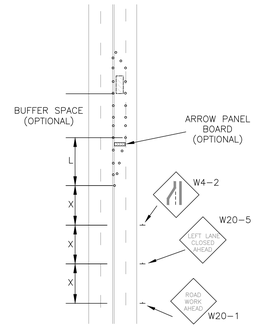

LEFT LANE CLOSURE
ON 4-LANE ROADWAY

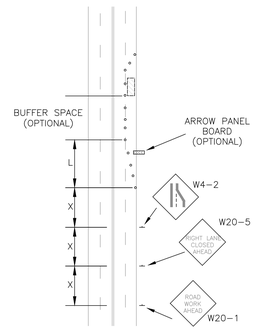

RIGHT LANE CLOSURE
ON 4-LANE ROADWAY

NO.	DATE:	REVISION	BY:	APP'D
1	01/30/12	UPDATE SPECIFICATIONS	KAP	LGV

DRAWN BY: K.PELTON
APP'D BY:

TOPEKA Public Works
ENGINEERING
620 SE MADISON STREET - 2nd FLR. - TOPEKA, KS 66607
Phone: (785) 368-3842 - Fax: (785) 368-3881

TRAFFIC CONTROL

DATE:
PAGE: OF
DRAWING: DT-120
PROJ.





UNLESS OTHERWISE NOTED ALL WARNING SIGNS TO BE 36"x36"

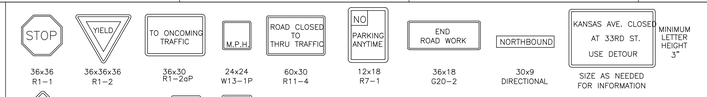

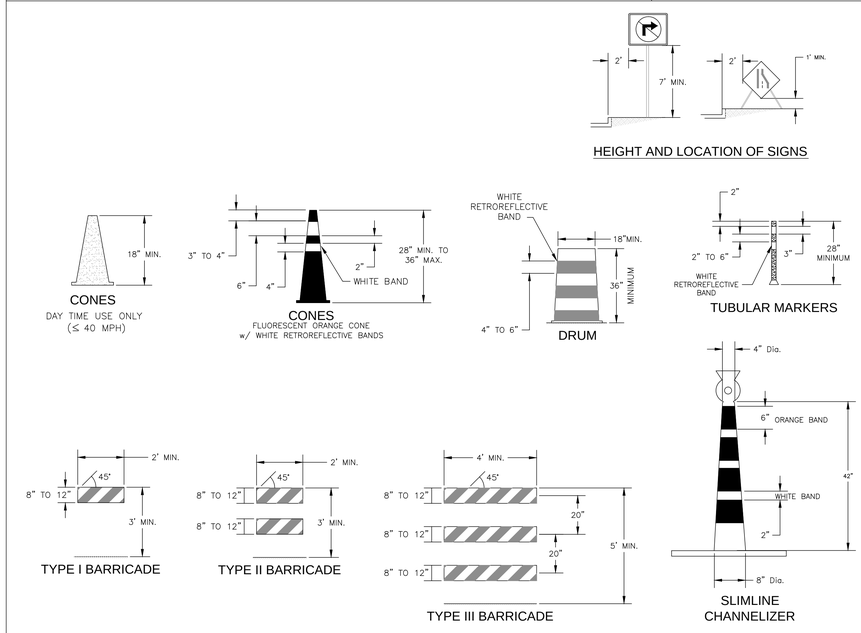

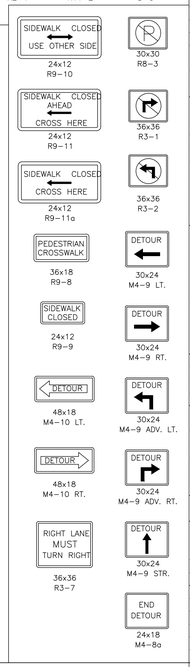

RECAPITULATION OF
SIGNS, MARKINGS, BARRICADES.

SIGN NO.	SIZE	SQ. FT.	UNIT	TOTAL
W20-1	36x36		EACH	
W20-2	36x36		EACH	
W20-3	36x36		EACH	
W20-4	36x36		EACH	
W20-5	36x36		EACH	
W9-2	36x36		EACH	
W3-1a	36x36		EACH	
W12-1	30x30		EACH	
W1-3	36x36		EACH	
W1-4	36x36		EACH	
W4-2	36x36		EACH	
W20-7a	36x36		EACH	
R1-1	30x36		EACH	
R1-2	36x36x36		EACH	
R1-2aP	36x30		EACH	
W13-1P	24x24		EACH	
R11-4	60x30		EACH	
R7-1	12x18		EACH	
G20-2	36x18		EACH	
D-3	7x9		EACH	
DIRECTIONAL	30x9		EACH	
INFORMATIONAL	AS NEEDED		EACH	
R4-7	24x30		EACH	
R4-7b	24x30		EACH	
R4-7c	18x30		EACH	
R2-1	30x36		EACH	
R11-2	48x30		EACH	
R3-1	36x36		EACH	
R3-2	36x36		EACH	
R3-7	36x36		EACH	
R8-3	30x30		EACH	
R9-8	36x18		EACH	
R9-9	24x12		EACH	
R9-10	24x12		EACH	
R9-11	24x12		EACH	
R9-11a	24x12		EACH	
M4-8a	30x24		EACH	
M4-9 ADV.	30x24		EACH	
M4-9	30x24		EACH	
M4-10	48x18		EACH	
CONSTRUCTION BARRICADES TYPE I OR II			EACH	
CONSTRUCTION BARRICADES TYPE III			EACH	
REFLECTIVE DRUMS			EACH	
REFLECTIVE VERTICAL PANELS			EACH	
SEQUENCING ARROW PANEL BOARD			EACH	
			EACH	
			EACH	
			EACH	
			EACH	
			EACH	
			EACH	
			EACH	
			EACH	

NO.	DATE:	REVISION	BY:	APP'D
1	01/30/12	UPDATE SPECIFICATIONS	KAP	LGV

DRAWN BY: K.PELTON
APP'D BY:

TOPEKA Public Works
ENGINEERING
620 SE MADISON STREET - 2nd FLR. - TOPEKA, KS 66607
Phone: (785) 368-3842 - Fax: (785) 368-3881

TRAFFIC CONTROL

DATE:
PAGE: OF
DRAWING: DT-121
PROJ.

HTK ARCHITECTS PA
9300 W. 110TH ST. STE. 150
OVERLAND PARK, KANSAS 66210
P. 913.663.5373
900 S. KANSAS AVE.
TOPEKA, KANSAS 66612
P. 785.266.5373
WWW.HTKARCHITECTS.NET

KEVIN W. BECK
LICENSED
16259
4-15-15
KANSAS
PROFESSIONAL ENGINEER

SBB
Schmidt, Beck & Boyd
Engineering / Surveying
1415 SW Topeka Blvd.
Topeka, KS 66612
Ph: (785) 215-8630

DATE:
- 4-15-15

REVISED DATE:

HTK PROJECT NUMBER:
- 1410.03

Department of Administration
Office of Facilities and
Procurement Management
800 SW Jackson, Suite 700
Topeka, Kansas 66612-1216
Phone 785-296-8899
FAX 785-296-3456

STATE OF KANSAS
STATE OF KANSAS ENERGY & SERVICE CENTER
Seventh & Van Buren Street, Topeka, Kansas
BUILDING NUMBER
173000038

4-15-15 DRAWN BY: Author CHECKED BY: Checker REV:

TRAFFIC CONTROL DETAILS III

A-012651

C404

CONSTRUCTION
DOCUMENTS

JCSBC
2-2-2016
Att.9G.--0020

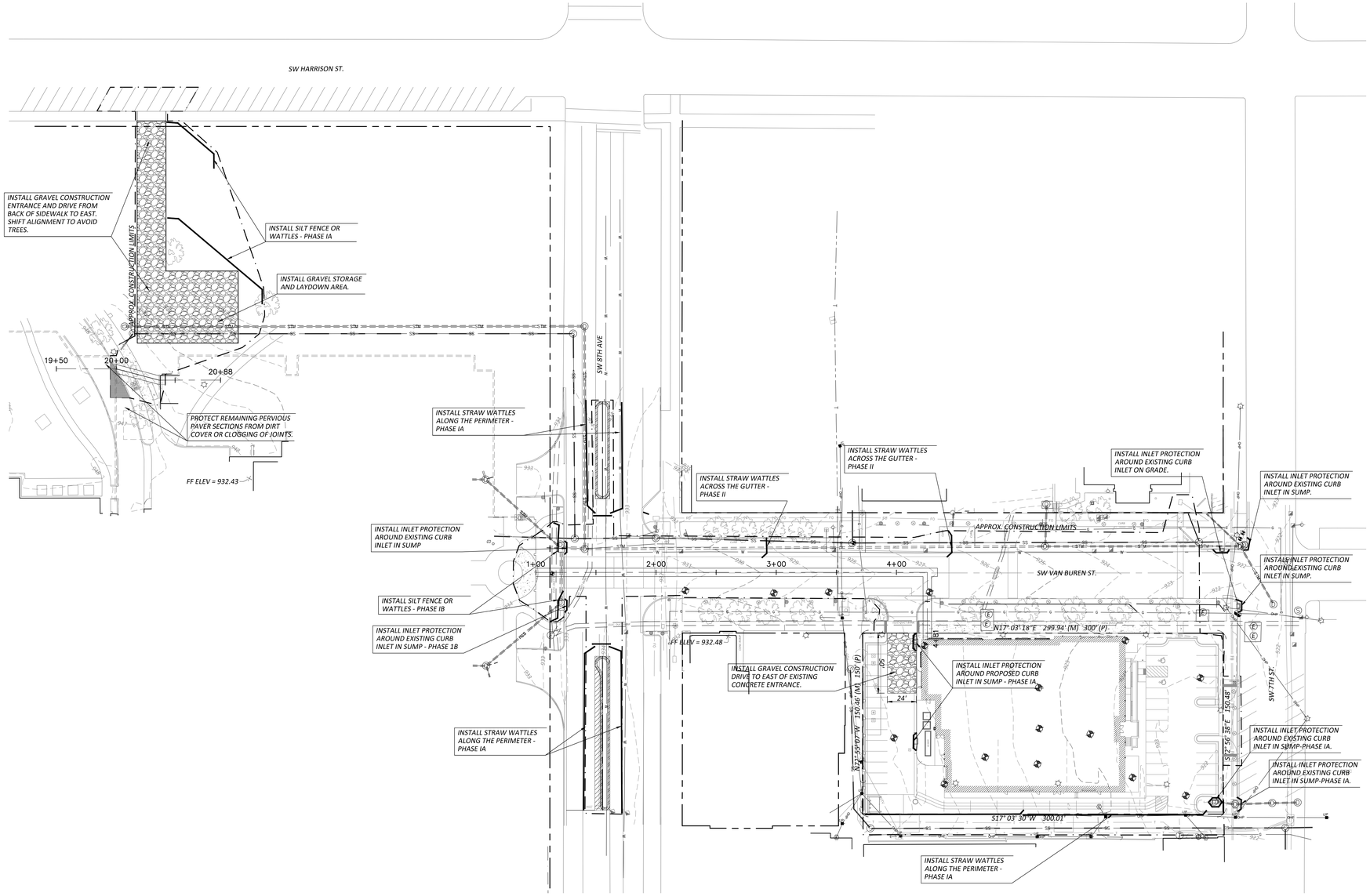

Horz.: 1"=40'

0 40'

GENERAL NOTES:

1. THE LOCATION OF ALL OVERHEAD AND UNDERGROUND UTILITIES MAY VARY FROM WHAT IS INDICATED IN THESE PLANS. IT SHALL BE THE CONTRACTOR'S RESPONSIBILITY TO COORDINATE WITH THE UTILITY OWNER TO LOCATE AND FLAG ALL UNDERGROUND UTILITIES WHETHER INDICATED OR NOT. NO EXCAVATION WILL BE PERMITTED IN THE AREA OF UNDERGROUND UTILITIES UNTIL ALL SUCH UTILITIES HAVE BEEN LOCATED AND IDENTIFIED TO THE SATISFACTION OF ALL PARTIES AND THEN ONLY WITH EXTREME CARE TO AVOID ANY POSSIBILITY OF DAMAGE TO THE UTILITY.

2. ALL DISTURBED AREAS THAT ARE NOT PAVED OR LANDSCAPED SHALL BE SEEDED, FERTILIZED AND MULCHED IN ACCORDANCE WITH THE SPECIFICATIONS.

EROSION CONTROL GENERAL NOTES:

1. THE CONTRACTOR SHALL BE RESPONSIBLE FOR IMPLEMENTING, MONITORING AND MAINTAINING BEST MANAGEMENT PRACTICES (BMP'S) AT ALL TIMES DURING THE CONSTRUCTION ON THIS PROPERTY.

2. PRIOR TO COMMENCEMENT OF EARTHWORK OPERATIONS, CONTRACTOR SHALL INSTALL PERIMETER WATTLES AND CONSTRUCTION ENTRANCE AS SHOWN ON THE PLAN. THE INLET PROTECTION AND ADDITIONAL WATTLES WITHIN WORK AREA SHALL BE INSTALLED IMMEDIATELY AFTER INSTALLATION OF THE INLETS AND COMPLETION OF ROUGH GRADING.

3. EROSION CONTROL MEASURES SHALL BE INSPECTED AND MAINTAINED BY THE CONTRACTOR NOT LESS THAN WEEKLY OR WITHIN 24 HOURS AFTER A RAINFALL EVENT OF 0.5 INCHES OR MORE. MAINTENANCE SHALL INCLUDE BUT NOT BE LIMITED TO SEDIMENT REMOVAL AND SILT FENCE REPAIR AND/OR REPLACEMENT.

4. CONTRACTOR SHALL CLEAR ALL SURROUNDING PARKING LOTS AND STREETS OF ANY TRACKED DEBRIS BY SWEEPING OR SCRAPING THE EXISTING PAVEMENT BY THE END OF EACH WORKDAY AND THE CONTRACTOR SHALL CLEAN UP SOIL WASHED OFF THE CONSTRUCTION SITE AFTER A STORM BY THE END OF THE NEXT WORKDAY.

5. DURING ALL SOIL DISTURBING ACTIVITIES, THE CONTRACTOR WILL TAKE APPROPRIATE STEPS USING ACCEPTED CONSTRUCTION METHODS TO MINIMIZE THE TIME OF EXPOSURE OF UNPROTECTED SOIL AND OTHER CONSTRUCTION MATERIALS TO RAINFALL.

6. CONTRACTOR SHALL KEEP A WRITTEN LOG OF WHEN CONSTRUCTION ACTIVITIES BEGIN, EROSION AND SEDIMENT CONTROLS ARE INSTALLED, INSPECTED AND REPAIRED.

7. EROSION AND SEDIMENT CONTROL MEASURES SHALL NOT BE REMOVED UNTIL GRASS COVER HAS BEEN ESTABLISHED OR AS DIRECTED BY ENGINEER.

8. ALL AREAS SHALL BE GRADED TO FINISHED GRADE PRIOR TO SEEDING AND MULCHING. ALL AREAS NOT PART OF THE HARDSCAPE OR OTHER NOTED LANDSCAPING SHALL BE PERMANENTLY SEEDED, FERTILIZED AND MULCHED.

9. ALL WATTLES SHALL BE STRAW WATTLE WS-12 AS MANUFACTURED BY NORTH AMERICAN GREEN, OR APPROVED EQUAL. THE WATTLES SHALL BE INSTALLED PER MANUFACTURER'S RECOMMENDATIONS. THE CONTRACTOR MAY USE WATTLES AND SILT FENCE INTERCHANGEABLY IN AREAS IDENTIFIED ON THE DRAWINGS.

10. THE CONTRACTOR HAS THE OPTION TO MODIFY THE LOCATION OF THE CONSTRUCTION ENTRANCE TO FIT THE PREFERRED WORK PATTERN.

WASTE DISPOSAL:

1. WASTE MATERIALS: ANY WASTE AND OTHER UNUSABLE MATERIALS WILL BE REMOVED FROM THE SITE ON A REGULAR BASIS AND PROPERLY DISPOSED OF IN AN APPROVED SITE.

2. CHEMICAL WASTE: ALL CHEMICAL WASTE MATERIALS WILL BE COLLECTED AND STORED IN A TIGHTLY SEALED METAL OR OTHER CHEMICAL RESISTANT CONTAINER. THE CONTAINER WILL MEET ALL LOCAL AND ANY STATE SOLID WASTE MANAGEMENT REGULATIONS. THE WASTE MATERIALS AND ALL DISPOSABLE MATERIALS WILL BE TRANSPORTED TO A COMMERCIAL CHEMICAL DISPOSAL FACILITY CAPABLE OF EITHER RECYCLING OR PROPERLY DISPOSING OF THE POLLUTANTS IN ACCORDANCE WITH ALL APPLICABLE FEDERAL, STATE AND LOCAL REGULATIONS. THE STATE WASTE MANAGEMENT SECTION CONTACT NUMBER IS (785) 296-1600.

3. HAZARDOUS WASTE: ALL HAZARDOUS WASTE MATERIALS, SUCH AS OIL FILTERS, PETROLEUM PRODUCTS, EQUIPMENT MAINTENANCE FLUIDS AND PAINTS, SHALL NOT BE STORED ON SITE AND WILL BE DISPOSED OF IN THE MANNER SPECIFIED BY LOCAL, STATE AND/OR FEDERAL REGULATIONS. IF THERE ARE QUESTIONS REGARDING THE PROPER HANDLING OF HAZARDOUS WASTES THE CONTRACTOR SHALL IMMEDIATELY CONTACT THE KANSAS DEPARTMENT OF HEALTH AND ENVIRONMENT HAZARDOUS WASTE SECTION AT (785) 296-1600.

4. SANITARY WASTE: PORTABLE TOILET FACILITIES WILL BE PROVIDED ON THE PROJECT SITE AND SERVICED BY THE PROVIDER ON A REGULAR BASIS.

MATERIAL MANAGEMENT PRACTICES:

GOOD HOUSEKEEPING: THE FOLLOWING GOOD HOUSEKEEPING PRACTICES WILL BE FOLLOWED ON-SITE DURING CONSTRUCTION.

1. ALL MATERIALS STORED ON-SITE WILL BE STORED IN A NEAT, ORDERLY MANNER IN ORIGINAL CONTAINERS IF APPROPRIATE.

2. PRODUCTS WILL BE KEPT IN THEIR ORIGINAL CONTAINERS WITH THE ORIGINAL MANUFACTURER'S LABELS.

3. MANUFACTURERS' RECOMMENDATIONS FOR PROPER USE AND DISPOSAL WILL BE FOLLOWED.

SPILL PREVENTION:

1. PETROLEUM PRODUCTS: ALL ON-SITE VEHICLES WILL BE MONITORED FOR LEAKS AND RECEIVE REGULAR PREVENTATIVE MAINTENANCE TO REDUCE THE CHANCE OF LEAKAGE. PETROLEUM PRODUCTS WILL BE STORED IN TIGHTLY SEALED CONTAINERS WHICH ARE CLEARLY LABELED.

2. FERTILIZERS: FERTILIZERS USED WILL BE APPLIED ONLY IN THE MINIMUM AMOUNTS RECOMMENDED BY THE MANUFACTURER. ONCE APPLIED, FERTILIZER WILL BE WORKED INTO THE SOIL TO LIMIT EXPOSURE TO STORM WATER. FERTILIZER SHALL NOT BE STORED ON-SITE.

3. CONCRETE TRUCKS: CONCRETE TRUCKS ARE LIMITED TO A DESIGNATED AREA TO WASH OUT OR DISCHARGE SURPLUS CONCRETE OR DRUM WASH WATER ON THE SITE. PROPER SIGNAGE SHALL BE INSTALLED AND MAINTAINED ON SITE DEFINING DIRECTIONS TO AND LOCATIONS OF THE SPECIFIED WASH OUT AREA. IF A WASH OUT AREA CANNOT BE DESIGNATED OR MAINTAINED ON SITE, CONCRETE WASH OUT AND DISPOSAL MAY BE PROHIBITED AT THE OWNERS DISCRETION.

HTK ARCHITECTS PA
900 S. KANSAS AVE. TOPEKA KANSAS 66612 P. 785.266.3121
9300 W. 110TH ST. STE. 150 OVERLAND PARK KANSAS 66210 P. 913.663.3123
WWW.HTKARCHITECTS.NET

KEVIN W. BECK LICENSED 16259 4-15-15 KANSAS PROFESSIONAL ENGINEER

SBB Schmidt, Beck & Boyd Engineering / Surveying
1415 SW Topeka Blvd.
Topeka, KS 66612
Ph: (785) 215-8630

DATE:
- 4-15-15

REVISED DATE:

HTK PROJECT NUMBER:
- 1410.03

Department of Administration
Office of Facilities and
Procurement Management
800 SW Jackson, Suite 700
Topeka, Kansas 66612-1216
Phone 785-296-8899
FAX 785-296-3456

STATE OF KANSAS
STATE OF KANSAS ENERGY & SERVICE CENTER
Seventh & Van Buren Street, Topeka, Kansas
BUILDING NUMBER
17300-00038

4-15-15 DRAWN BY: Author CHECKED BY: Checker REV:

EROSION CONTROL PLAN

A-012651

C500

CONSTRUCTION DOCUMENTS

JCSBC
2-2-2016
Att.9G.--0021

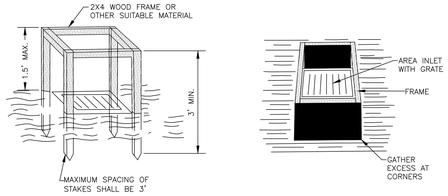

TOP VIEWS

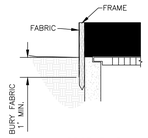

PROFILE VIEW

NOTES:
1. BASE OF FABRIC SHALL BE BURIED AT LEAST 1' BELOW GROUND SURFACE AND BACKFILLED WITH CRUSHED STONE OR COMPACTED MATERIAL.
2. WIRE MESH FENCE MAY BE USED TO SUPPORT FABRIC. TOP OF FENCE SHOULD BE LEVEL WITH FRAME AND BOTTOM BURIED 6" BELOW GROUND.
3. MAY BE NECESSARY TO BUILD A TEMPORARY DIKE ON DOWN-SLOPE SIDE OF STRUCTURE TO PREVENT BYPASS FLOW.
4. STRAW BALES OR GRAVEL FILLED FILTER BAGS MAY BE USED IN LIEU OF FABRIC. IF STRAW BALES ARE USED, TWO 4" (MINIMUM) LONG, 2? X 2? HARDWOOD STAKES SHALL BE DRIVEN THROUGH EACH BALE AND SET BACK 12? TO 24? FROM INLET. IF FILTER BAGS ARE USED, PLACE BAGS SUCH THAT NO GAPS ARE EVIDENT.

AREA INLET PROTECTION

GENERAL NOTES:
1. ANY EROSION AND SEDIMENT CONTROL MEASURES INTENDED TO CONTROL EROSION OF AN EARTH DISTURBANCE OPERATION SHALL BE INSTALLED BEFORE ANY EARTH DISTURBANCE OPERATIONS TAKE PLACE.
2. THE CONTRACTOR SHALL INSPECT THE LAND DISTURBANCE SITE AFTER EACH SIGNIFICANT RAINFALL EVENT WITHIN A 24-HOUR PERIOD AND ASSURE THAT ALL EROSION AND SEDIMENT CONTROL MEASURES ARE IN WORKING CONDITION PRIOR TO ANY FORECASTED RAINFALL. SEDIMENT REMOVAL AND ALL NECESSARY REPAIRS SHALL BE MADE TO MAINTAIN THE INTEGRITY OF THE EROSION AND SEDIMENT CONTROL MEASURES. SEDIMENT SHALL BE REMOVED ONCE IT REACHES HALF OF THE INSTALLED HEIGHT OF MEASURE.
3. THE CONTRACTOR SHALL MAINTAIN ALL EROSION AND SEDIMENT CONTROL MEASURES DURING ALL PHASES OF CONSTRUCTION UNTIL OWNER ACCEPTS WORK AS COMPLETE. THE CONTRACTOR SHALL PROVIDE TEMPORARY SEEDING, BERMS, SILT FENCE, SEDIMENT TRAPS OR OTHER MEANS TO PREVENT SEDIMENT FROM REACHING STREAMS, PUBLIC RIGHT-OF-WAY OR ADJACENT PROPERTY.
4. SEDIMENT AND EROSION CONTROL MEASURES SHALL BE REMOVED ONCE 70 PERCENT OF THE PERMANENT COVER IS ESTABLISHED.
5. THE CONTRACTOR SHALL TEMPORARILY SEED AND MULCH ALL DISTURBED AREAS IF THERE HAS BEEN NO CONSTRUCTION ACTIVITY ON THEM FOR A PERIOD OF 14 CALENDAR DAYS. IF THE ENGINEER DETERMINES THAT A SITE HAS A POTENTIAL FOR EROSION, STABILIZATION OF SOIL MAY BE REQUIRED. TEMPORARY SEED MIXTURE SHALL BE APPROVED BY THE ENGINEER OR AS FOLLOWS:

TYPE:	APPLICATION RATE:	
	WINTER WHEAT	120 LBS PER ACRE
	RYEGRASS	75 LBS PER ACRE

REPAIRS AND RESEEDING SHALL BE PERFORMED BY THE CONTRACTOR AT THE DIRECTION OF THE ENGINEER AT NO ADDITIONAL COST TO THE OWNER. IF VEGETATIVE MEASURES ARE NOT EFFECTIVE, NON-VEGETATIVE OPTION MAY BE REQUIRED.

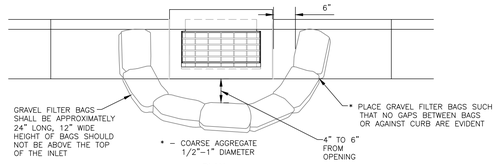

PLAN

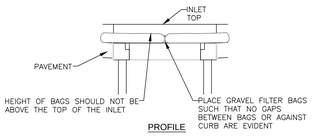

PROFILE

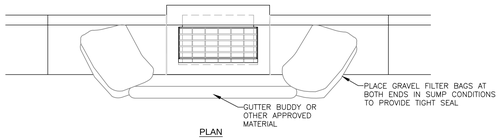

PLAN

SUMP CONDITIONS

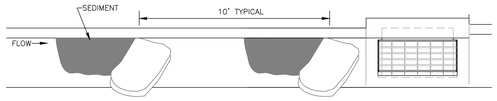

PLAN

IN GRADE CONDITIONS

NOTES:
1. OTHER APPROVED CURB INLET SEDIMENT FILTERS MAY BE USED.
2. IMMEDIATELY FOLLOWING INLET CONSTRUCTION AND PRIOR TO CONSTRUCTION OF CURB AND INLET THROAT, PROTECT INLET OPENING BY INSTALLING A 2"X6" BOARD WRAPPED IN SILT FENCE AROUND PERIMETER. SEE AREA INLET DETAIL THIS PAGE.
3. CONTRACTOR TO CLEAN OUT SEDIMENT AFTER EACH SIGNIFICANT RAINFALL EVENT.
4. DURING CONSTRUCTION OF RESIDENTIAL SUBDIVISIONS, GRAVEL FILTER BAGS SHALL BE REPLACED PRIOR TO DEGRADATION.
5. ANY SEDIMENT OR GRAVEL DEPOSITED IN INLET SHALL BE REMOVED PROMPTLY.

CURB INLET SEDIMENT PROTECTION

1	March 2013	Revised notes	DHS	JDH			
NO.	DATE:	REVISION	BY:	APP'D			

DRAWN BY: DHS
APP'D BY: JDH

SHAWNEE COUNTY, KANSAS
PUBLIC WORKS DEPARTMENT
COUNTY ENGINEER
1515 NW SALINE
TOPEKA, KS 66618
(785) 233-7702

TOPEKA Public Works ENGINEERING
620 SE MADISON St. ~ 2nd Floor ~ TOPEKA, KS 66607
Phone: (785) 368-3842 ~ Fax: (785) 368-3881

STANDARD DETAILS

EROSION & POLLUTION CONTROL
INLET PROTECTION AND GENERAL NOTES
(DT-020)

DATE: Month. Year
SHEET: X. of X
PROJ.: X-XXXXXX.XX

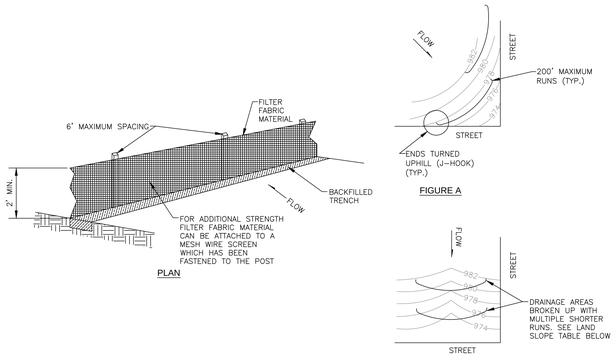

FIGURE A

FIGURE B

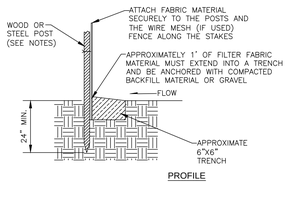

PROFILE

Land Slope and Distance for Sediment Fence

Land Slope (percent)	Maximum Slope Distance* above Fence (feet)
Less than 2	100
2 to 5	75
5 to 10, greater than 10	50*

*Follow manufacturers' recommendations for proper spacing.

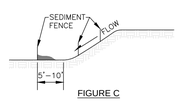

FIGURE C

NOTES:
1. THE USE OF HAY/STRAW BALES IS THE CONTRACTOR'S OPTION. IF HAY BALES ARE USED PLACE TIGHTLY TOGETHER WITH 2"X2"X4' (MIN.) LENGTH WOOD STAKES IN CENTER OF BALES. BALES SHOULD EMBEDDED INTO THE SOIL A MINIMUM OF 6" WITHIN A MAXIMUM DRAINAGE AREA OF 1 ACRE OR LESS.
2. THE SEDIMENT FENCES SHALL BE PLACED ALONG CONTOUR LINES, WITH A SHORT SECTION TURNED UPGRADE (J-HOOK) AT EACH END OF THE BARRIERS TO HOLD WATER AND SEDIMENT (SEE FIGURE A).
3. AREAS THAT CONTAIN LARGER CONCENTRATIONS OF WATER SHALL BE LIMITED TO LENGTHS OF SILT FENCES TO NO LONGER THAN 200' (SEE FIGURE A). LIMIT TO 1/4 ACRE PER 100' OF FENCE. FURTHER RESTRICT AREA BY LAND SLOPE TABLE ABOVE.
4. AREAS SHOULD BE BROKEN UP WITH INTERIOR SEDIMENT FENCE TO MINIMIZE WATER CONCENTRATIONS AND LONG SLOPES (SEE FIGURE B & C).
5. SEDIMENT FENCES INSTALLED AT TOE OF SLOPE SHALL BE PLACED 5' TO 10' AWAY (DOWNSTREAM) TO CREATE SEDIMENT STORAGE (SEE FIGURE C).
6. DEPTH OF WATER CONCENTRATIONS SHOULD NOT EXCEED 1.5' AT ANY POINT ALONG THE FENCE.
7. PLACE SILT FENCE ONLY WHERE OVERLAND OR SHEET FLOW DISCHARGES OCCUR.
8. SILT FENCES SHOULD NOT BE USED IN CONCENTRATED FLOW CHANNELS, OR AS INLET PROTECTION DEVICES IF FLOODING CONDITIONS COULD OCCUR.

SILT FENCE

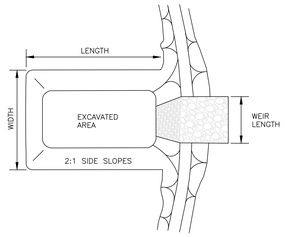

TOP VIEW

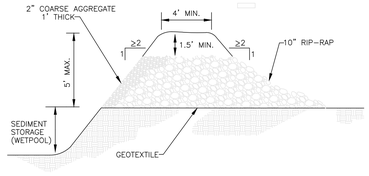

SIDE VIEW

SEDIMENT TRAP

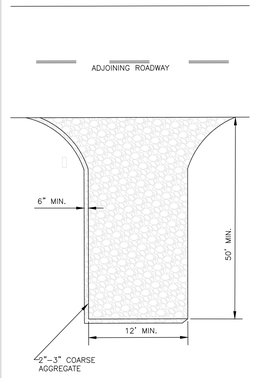

NOTES:
1. GEOTEXTILE FABRIC MAY BE USED AS AN UNDERLINER IN WET CONDITIONS TO PROVIDE STABILITY.
2. PROVIDE SUFFICIENT WIDTH, LENGTH & TURNING RADIUS FOR CONSTRUCTION VEHICLES ENTERING & EXITING SITE.
3. MUST BE MAINTAINED IN A CONDITION WHICH WILL PREVENT TRACKING OR DIRECT FLOW OF SEDIMENT ON TO STREETS AND KEEP THE ENTRANCE EFFECTIVE.
4. PROPERLY GRADE TO PREVENT RUNOFF FROM LEAVING CONSTRUCTION SITE THROUGH ENTRANCE/EXIT.

CONSTRUCTION ENTRANCE

2	March 2013	Repl. Sed. Trap & Added Land Slope Table	DHS	JDH			
1	Dec. 2009	Modified stake depth & spacing	DHS	JDH			
NO.	DATE:	REVISION	BY:	APP'D			

DRAWN BY: DHS
APP'D BY: JDH

SHAWNEE COUNTY, KANSAS
PUBLIC WORKS DEPARTMENT
COUNTY ENGINEER
1515 NW SALINE
TOPEKA, KS 66618
(785) 233-7702

TOPEKA Public Works ENGINEERING
620 SE MADISON St. ~ 2nd Floor ~ TOPEKA, KS 66607
Phone: (785) 368-3842 ~ Fax: (785) 368-3881

STANDARD DETAILS

EROSION & POLLUTION CONTROL
SILT FENCE,SEDIMENT TRAP AND CONSTRUCTION ENTRANCE
(DT-021)

DATE: Month. Year
SHEET: X. of X
PROJ.: X-XXXXXX.XX

HTK ARCHITECTS PA
900 S. KANSAS AVE. TOPEKA KANSAS 66612 P. 785.266.3373
9300 W. 110TH ST. STE. 150 OVERLAND PARK KANSAS 66210 P. 913.663.3373
WWW.HTKARCHITECTS.NET

KEVIN W. BECK LICENSED PROFESSIONAL ENGINEER 16259 4-15-15 KANSAS

SBB Schmidt, Beck & Boyd Engineering / Surveying
1415 SW Topeka Blvd.
Topeka, KS 66612
Ph: (785) 215-8630

DATE:
- 4-15-15

REVISED DATE:
-
-
-
-

HTK PROJECT NUMBER:
- 1410.03

Department of Administration
Office of Facilities and
Procurement Management
800 SW Jackson, Suite 700
Topeka, Kansas 66612-1216
Phone 785-296-8899
FAX 785-296-3456

STATE OF KANSAS
STATE OF KANSAS ENERGY & SERVICE CENTER
Seventh & Van Buren Street, Topeka, Kansas
BUILDING NUMBER
17300-00038
4-15-15 DRAWN BY: Author CHECKED BY: Checker REV:

EROSION CONTROL DETAILS I

A-012651

C501

CONSTRUCTION DOCUMENTS

JCSBC
2-2-2016
Att.9G--0022

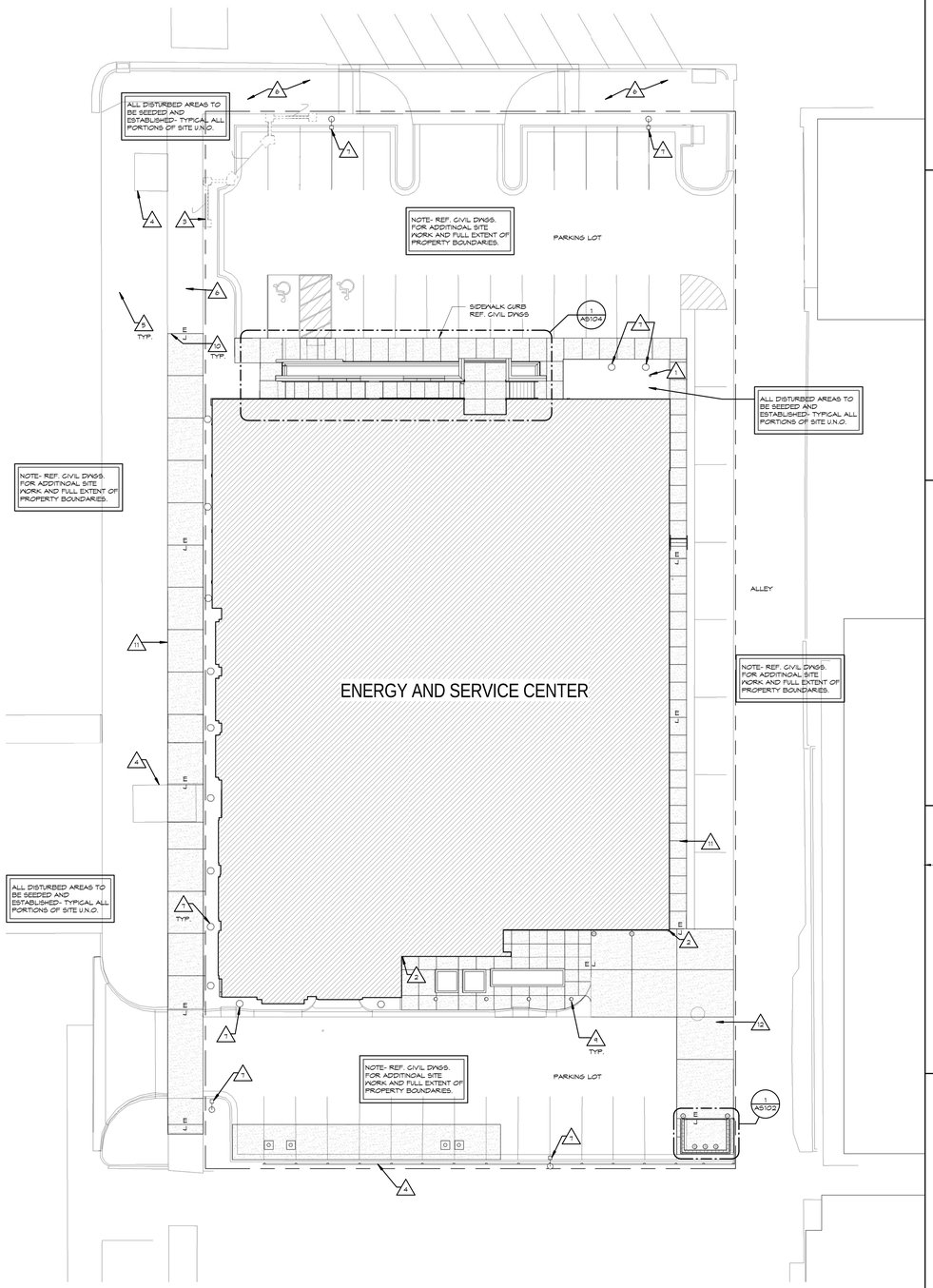

1 SITE PLAN
1/16" = 1'-0"

NORTH

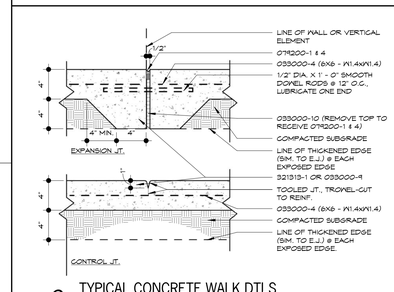

3 TYPICAL CONCRETE WALK DTLS.
1 1/2" = 1'-0"

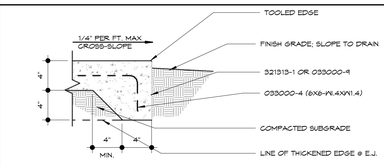

4 TYPICAL THICKENED EDGE
1 1/2" = 1'-0"

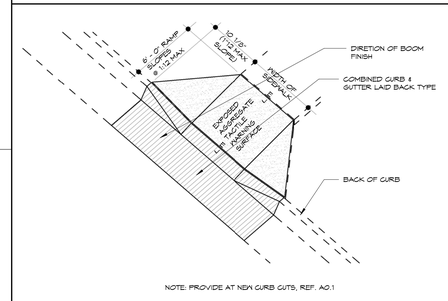

5 SIDEWALK HANDICAP RAMP
1 1/2" = 1'-0"

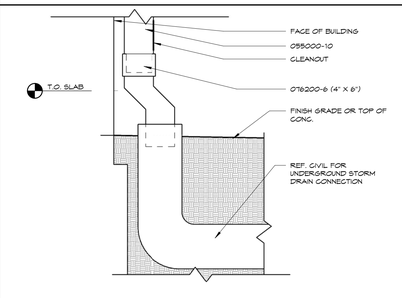

6 DOWNSPOUT BOOT
1 1/2" = 1'-0"

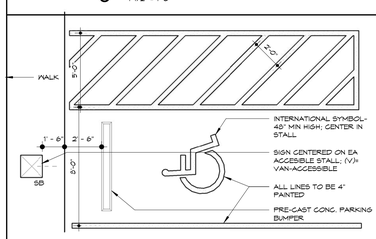

7 H.C. GRAPHICS / ACCESSIBLE PARKING
1/4" = 1'-0"

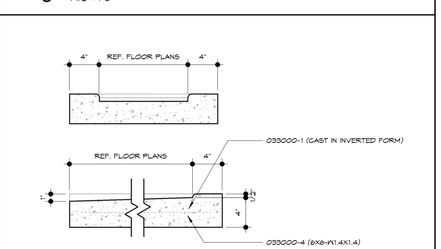

8 CONCRETE SPLASHBLOCK
1 1/2" = 1'-0"

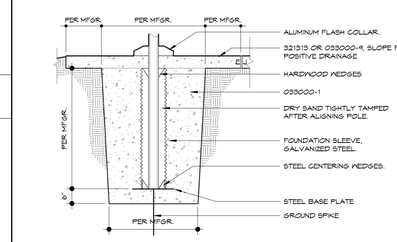

9 FLAGPOLE BASE
1/2" = 1'-0"

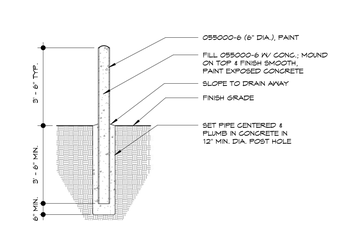

10 STEEL BOLLARD
1 1/2" = 1'-0"

SITE PLAN NOTES

GENERAL: COORDINATE WITH WORK SHOWN ON STRUCTURAL, MECHANICAL, PLUMBING, AND ELECTRICAL DRAWINGS, REF. FE SHEET FOR EQUIP. COORDINATION

1. LOCATION OF FLAGPOLE, 10TS00-1.
2. LOCATION OF DOWNSPOUT BOOT, REF. 6/AS101.
3. REMOVE EXISTING BRICK & WROUGHT IRON FENCE COMPLETELY, INCLUDING ELECTRICAL & FOOTINGS.
4. EXISTING GUARDRAIL TO REMAIN.
5. EXISTING TREE TO REMAIN. PROTECT DURING CONSTRUCTION.
6. EXISTING CONCRETE SIDEWALK TO REMAIN.
7. BUILDING LIGHTING REF. ELECT.
8. PROPERTY LINE REF. CIVIL DWGS.
9. BOLLARD REF. 10/AS101
10. EXPANSION JOINT REF. 3/AS101
11. CONCRETE SIDEWALK REF. 3/AS101
12. CONCRETE PAVEMENT REF. CIVIL DWGS.

GENERAL SITE NOTES

1) ALL UTILITY INFORMATION SHOWN HEREIN IS BASED ON THE INFORMATION AVAILABLE. THE CONTRACTOR SHALL VERIFY ALL UTILITY DEPTHS & LOCATIONS PRIOR TO CONSTRUCTION. ANY DAMAGE CAUSED BY THE CONTRACTOR'S CONSTRUCTION OPERATIONS SHALL BE REPAIRED AT THE CONTRACTOR'S EXPENSE.

2) ALL GROUND SURFACES SHALL VARY UNIFORMLY BETWEEN INDICATED ELEVATIONS. GRADING PLAN REFLECTS TOP OF TURF OR PAVEMENT ELEVATIONS U.N.O.

3) AFTER CONSTRUCTION COMPLETION, STAGING, PARKING, AND STORAGE AREA SHALL BE RESTORED TO THE PRE-CONSTRUCTION CONDITIONS. ANY DAMAGE TO OR REMOVAL OF EXISTING CONDITIONS OCCURRING ON-SITE DURING CONSTRUCTION SHALL BE REPAIRED OR REPLACED TO THE SATISFACTION OF THE OWNER.

4) CARE SHALL BE EXERCISED TO PRESERVE AND/OR PROTECT EXISTING TREES AND VEGETATION OUTSIDE OF AREAS TO BE GRADED. ANY NECESSARY REPAIR OF THESE AREAS DAMAGED BY THE GENERAL CONTRACTOR AND/OR HIS ASSIGNEES SHALL BE THE SOLE RESPONSIBILITY OF THE CONTRACTOR AND SHALL BE PERFORMED TO THE SATISFACTION OF THE OWNER.

5) CONTRACTOR SHALL PROVIDE AND MAINTAIN POSITIVE DRAINAGE DURING CONSTRUCTION.

6) THE CONTRACTOR IS RESPONSIBLE FOR THE PROVISION OF ALL MATERIALS, TOOLS, EQUIPMENT AND LABOR NECESSARY TO CONTROL EROSION, SILTATION AND DISCHARGES OF FILL MATERIAL (SEDIMENT) INTO DOWNSTREAM SYSTEMS OR RECEIVING CHANNELS. THIS SHALL BE REQUIRED DURING ALL PHASES OF CONSTRUCTION AND UNTIL SUITABLE GROUND COVER IS ESTABLISHED FOR ALL DISTURBED AREAS. IF ANY METHOD OF CONTROL FAILS, THE CONTRACTOR SHALL NOTIFY THE ARCHITECT IMMEDIATELY.

7) ALL METHODS AND MEANS OF CONSTRUCTION PERFORMED ON THIS PROJECT SHALL CONFORM TO THE DESIGN CRITERIA AND STANDARD TECHNICAL SPECIFICATIONS FOR THE CITY OF TOPEKA AND SHAWNEE COUNTY, KANSAS, CURRENT EDITION. THE MORE STRINGENT REQUIREMENT SHALL APPLY FOR DISCREPANCIES BETWEEN THE CONTRACT DOCUMENTS AND THE SAID SPECIFICATIONS.

8) ALL DISTURBED AREAS SHALL BE SEEDED, FERTILIZED AND MULCHED WITHIN 14 DAYS OF THE COMPLETION OF WORK IN EACH AREA IN ACCORDANCE WITH THE TECHNICAL SPECIFICATIONS.

9) CONTRACTOR SHALL LIMIT SITE DISTURBANCE TO ALL PRACTICAL EXTENTS, TO THOSE AREAS SHOWN FOR CONSTRUCTION OPERATIONS.

10) OWNER SHALL PROVIDE REQUIRED GEOTECHNICAL MATERIALS AND CONSTRUCTION TESTING. CONTRACTOR SHALL COORDINATE WITH AND NOTIFY GEOTECHNICAL ENGINEER OF REQUIRED TESTING SCHEDULE.

11) SIX (6) FOOT CHAIN LINK PERIMETER FENCING AND ROCK SURFACING IS REQUIRED FOR ANY STORAGE, STAGING OR PARKING.

12) ALL DRIVE LANES ON THE SCHOOL CAMPUS, OUTSIDE OF THE AREA OF THE CONSTRUCTION FENCING SHALL BE KEPT CLEAR FOR SCHOOL TRAFFIC. THE SCHEDULE OF CONSTRUCTION DELIVERIES SHALL BE COORDINATED WITH THE OWNER IN ORDER TO AVOID BEFORE AND AFTER SCHOOL TRAFFIC.

13) ALL CONCRETE SIDEWALKS SHALL HAVE A SLOPE NO GREATER THAN 1:12.

HTK ARCHITECTS PA
9300 W 110TH ST. STE. 150
OVERLAND PARK, KANSAS 66210
P 913.663.3373
900 S. KANSAS AVE., SUITE 200
TOPEKA KANSAS 66612
P 785.266.3373
www.htkarchitects.com

DANIEL WYATT BLACKBURN — NUMBER 13435 — LICENSED ARCHITECT — KANSAS — PROFESSIONAL ARCHITECT

DENNIS A. HAGEN — LICENSED — 4-15-15 — 25621 — KANSAS — PROFESSIONAL ARCHITECT

DATE:
- 4-15-15

REVISED DATE:
- 12-18-14
- 2-9-15
- 3-10-15

HTK PROJECT NUMBER:
- 1410.03

Department of Administration
Office of Facilities and
Procurement Management
800 SW Jackson, Suite 700
Topeka, Kansas 66612-1216
Phone: 785-296-2369
FAX 785-296-3456

STATE OF KANSAS
STATE OF KANSAS ENERGY & SERVICE CENTER
221 SW 7th Street
BUILDING NUMBER 173000038

DATE: 4-15-15 DRAWN BY: Author CHECKED BY: Checker REV:

ARCHITECTURAL SITE PLAN

A-012651

AS101

CONSTRUCTION DOCUMENTS

4/16/2015 11:12:12 AM C:\Users\jms\Documents\REVIT\State of Kansas Energy_Central_jms.rvt

JCSBC
2-2-2016
AIU9G.--0023

4/16/2015 11:22:20 AM C:\Users\jms\Documents\REVIT\State of Kansas Energy_Central_jms.rvt

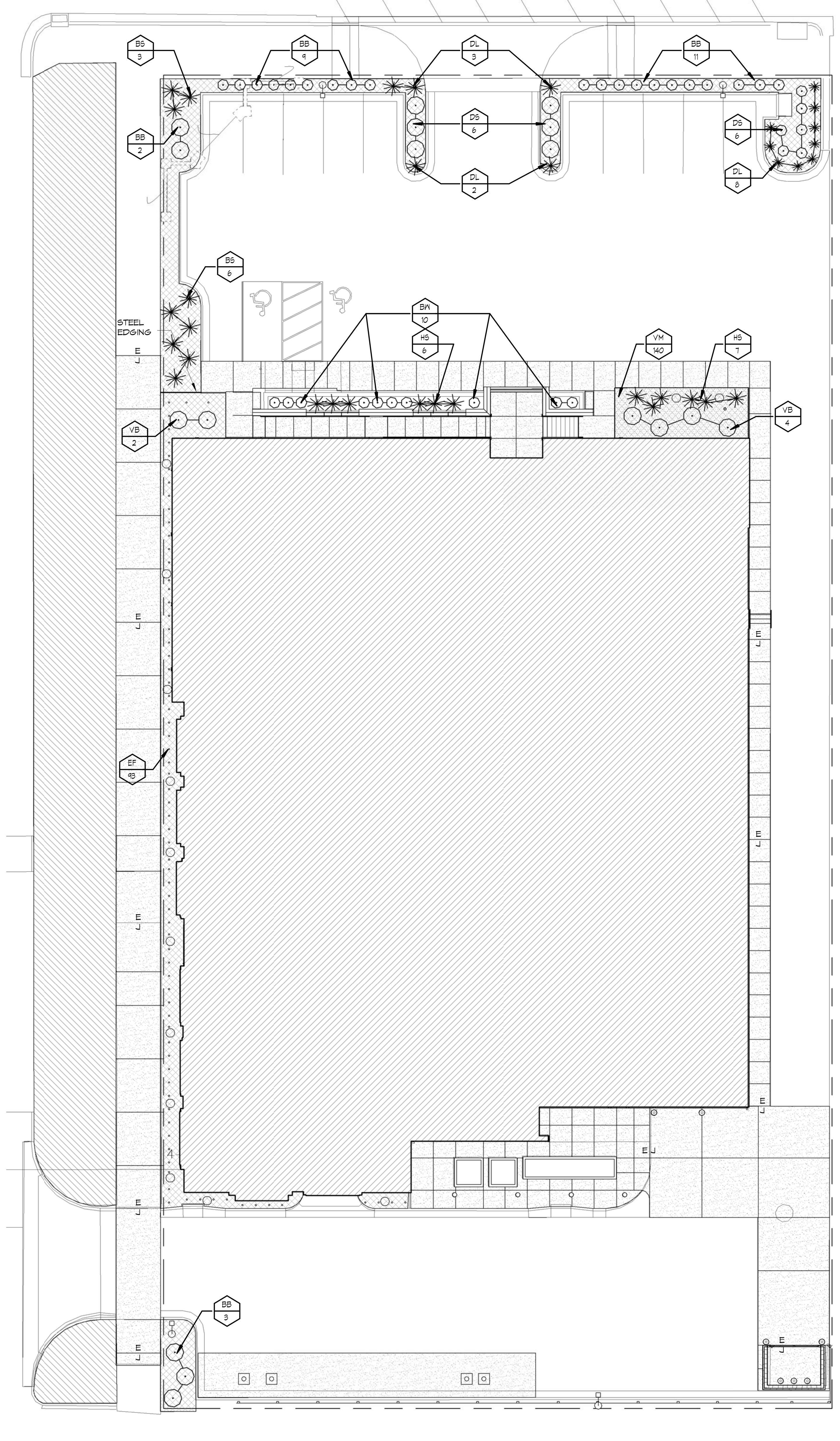

6 LANDSCAPING PLAN
1/16" = 1'-0"

NORTH

LANDSCAPE LEGEND

Symbol	Description	Symbol	Description
	EXISTING TREE TO REMAIN		MULCH AND WEED MAT
	SHRUB TYPE 1		SEEDED GRASS
	SHRUB TYPE 2		
	STEEL EDGING		GROUNDCOVER

PLANTING SCHEDULE

PLANT ABBREVIATION	QUANTITY	COMMON NAME	SIZE	SPACING
BB	25	Burning Bush "Dwarf Winged"	3 Gal.	4 Ft.
DS	12	Dwarf Spirea "Goldene Flame"	1 Gal.	3 Ft.
NB	6	Vibernum "Ann Russel"	3 Gal.	6 Ft.
BW	10	Boxwood "Garden Velvet"	2 Gal.	3 Ft.
DL	13	Daylily "Stella D Oro"	1 Gal.	3 Ft.
BS	9	Lord Snowdon "Big Blue Stem"	1 Gal.	3 Ft.
HS	13	Hosta "Ginko Craig"	1 Gal.	3 Ft.
EF	93	Euonymus Fortuni "Coloradus"	1 Gal.	3 Ft.
VM	140	Vinca Minor	4"	1 per 2 S.F.

LANDSCAPING NOTES

1) CONTRACTOR SHALL STAKE ALL PLANTING AREAS IN THE FIELD PRIOR TO PLANTING FOR APPROVAL OF ARCHITECT.
2) CONTRACTOR SHALL VERIFY ALL PLANT QUANTITIES PRIOR TO PLANTING. NOTIFY THE ARCHITECT OF ANY DISCREPANCIES WITH THE PLAN. PLAN QUANTITIES SHALL SUPERCEDED SHCEDULED QUANTITIES.
3) ALL PLANT MATERIAL SHALL BE SPECIMEN QUALITY AND SHALL COMPLY WITH THE RECOMMENDATIONS AND REQUIREMENTS OF ANSI A60.1 THE 'AMERICAN STANDARD FOR NURSERY STOCK.'
4) ALL PLANTING BEDS SHALL BE EDGED WITH GREEN STEEL EDGING WHERE SHOWN.
5) PREPARE PLANTING BEDS AND INCORPORATE AMENDMENTS ACCORDING TO SPECIFICATIONS.
6) CYPRUS MULCH, PER SPECIFICATIONS, SHALL BE USED AS A THREE INCH (3") TOP DRESSING WITH COMMERCIAL GRADE WEED BARRIER UNDER; IN ALL PLANTING BEDS AND AROUND ALL TREES.
7) THE LANDSCAPE CONTRACTOR SHALL NOT COMMENCE WORK UNTIL THE SITE IS FREE OF DEBRIS CAUSED BY ON-GOING CONSTRUCTION OPERATIONS. REMOVAL OF DEBRIS SHALL BE THE RESPONSIBILITY OF THE GENERAL CONTRACTOR. LANDSCAPE WORK SHALL NOT BEGIN UNTIL THE ARCHITECT HAS GIVEN WRITTEN APPROVAL FOR SUCH. THERE SHALL BE NO DELAYS DUE TO LACK OF COORDINATION FOR THIS ACTIVITY.
8) THE ARCHITECT SHALL APPROVE GRADES AND CONDITION OF SITE PRIOR TO SEEDING OPERATIONS.

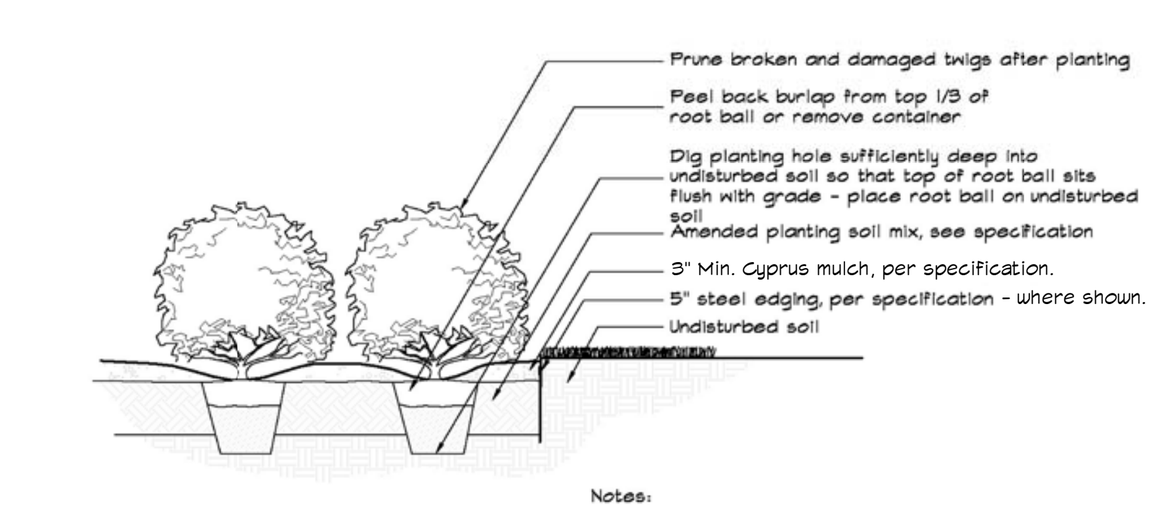

9 SHRUB INSTALLATION DETAIL
NOT TO SCALE

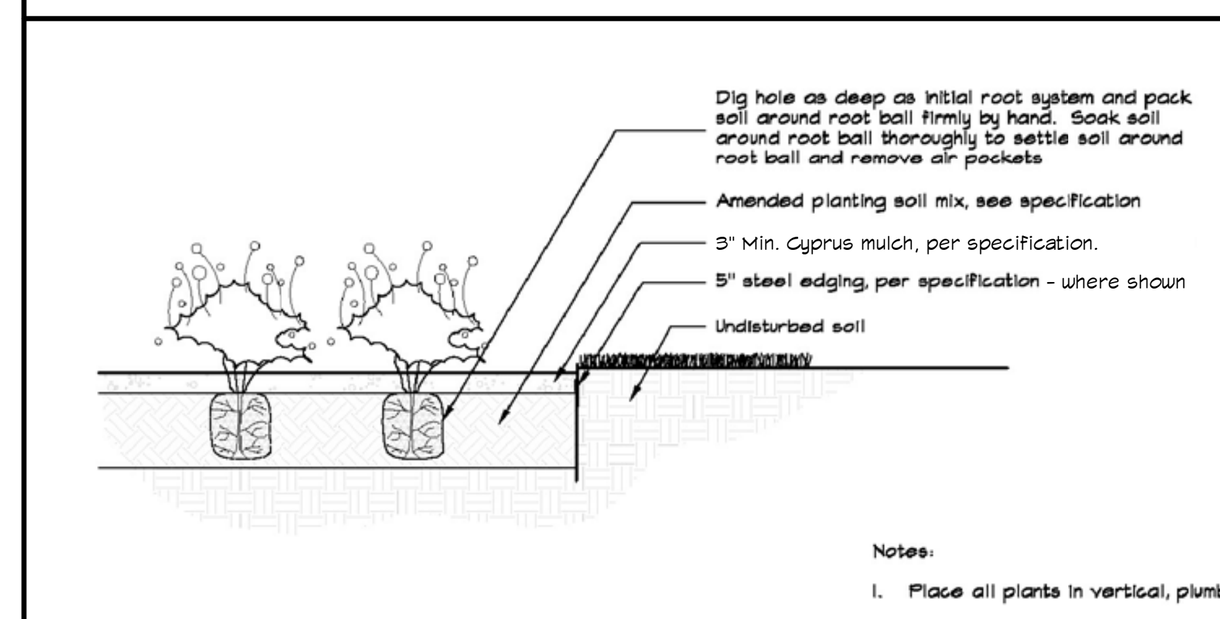

10 GROUNDCOVER & PERENNIAL PLANTING DETAIL
NOT TO SCALE

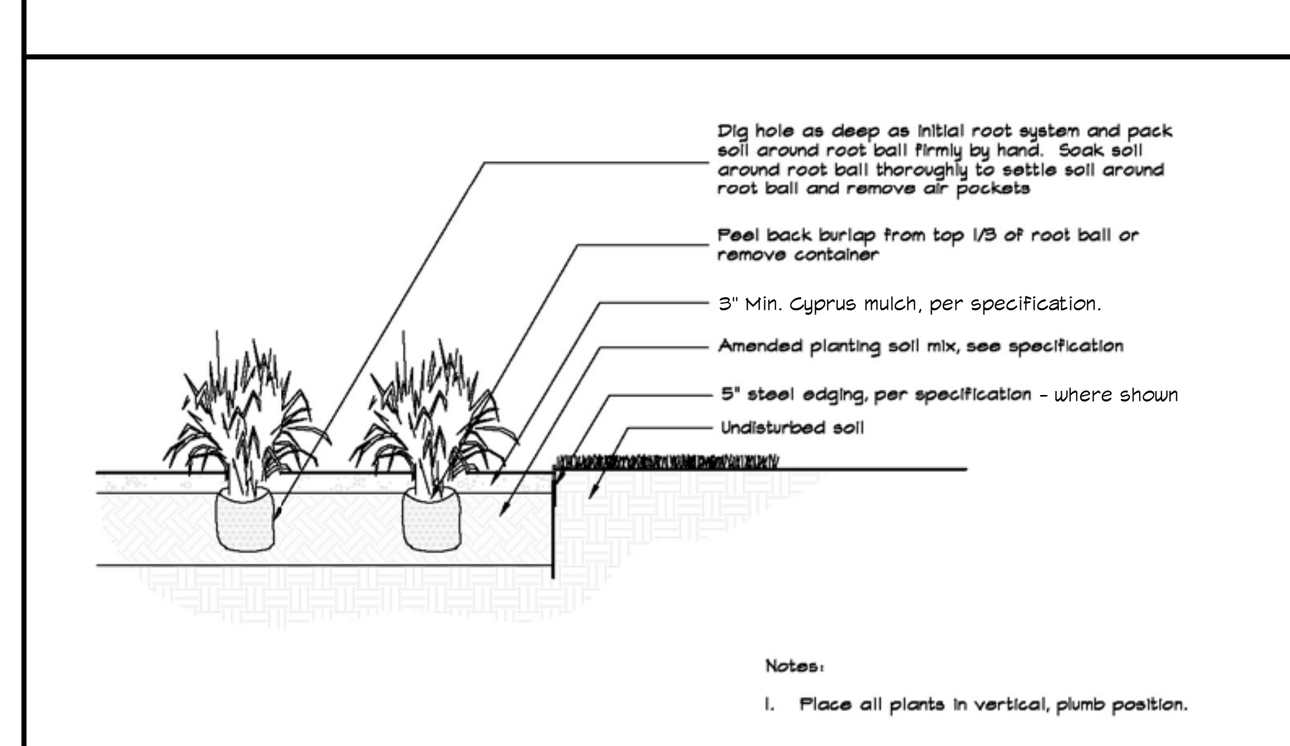

11 ORNAMENTAL GRASS PLANTING DETAIL
NOT TO SCALE

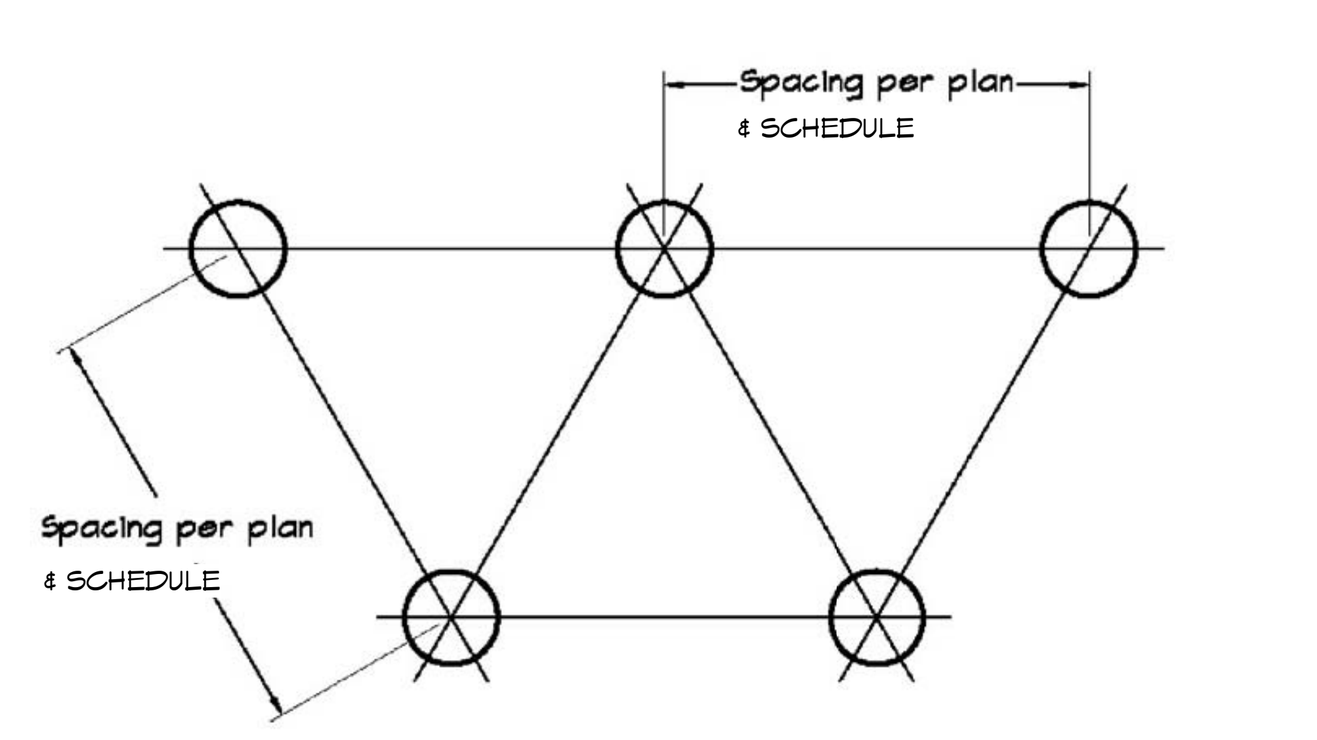

13 PLANT SPACING DIAGRAM
NOT TO SCALE

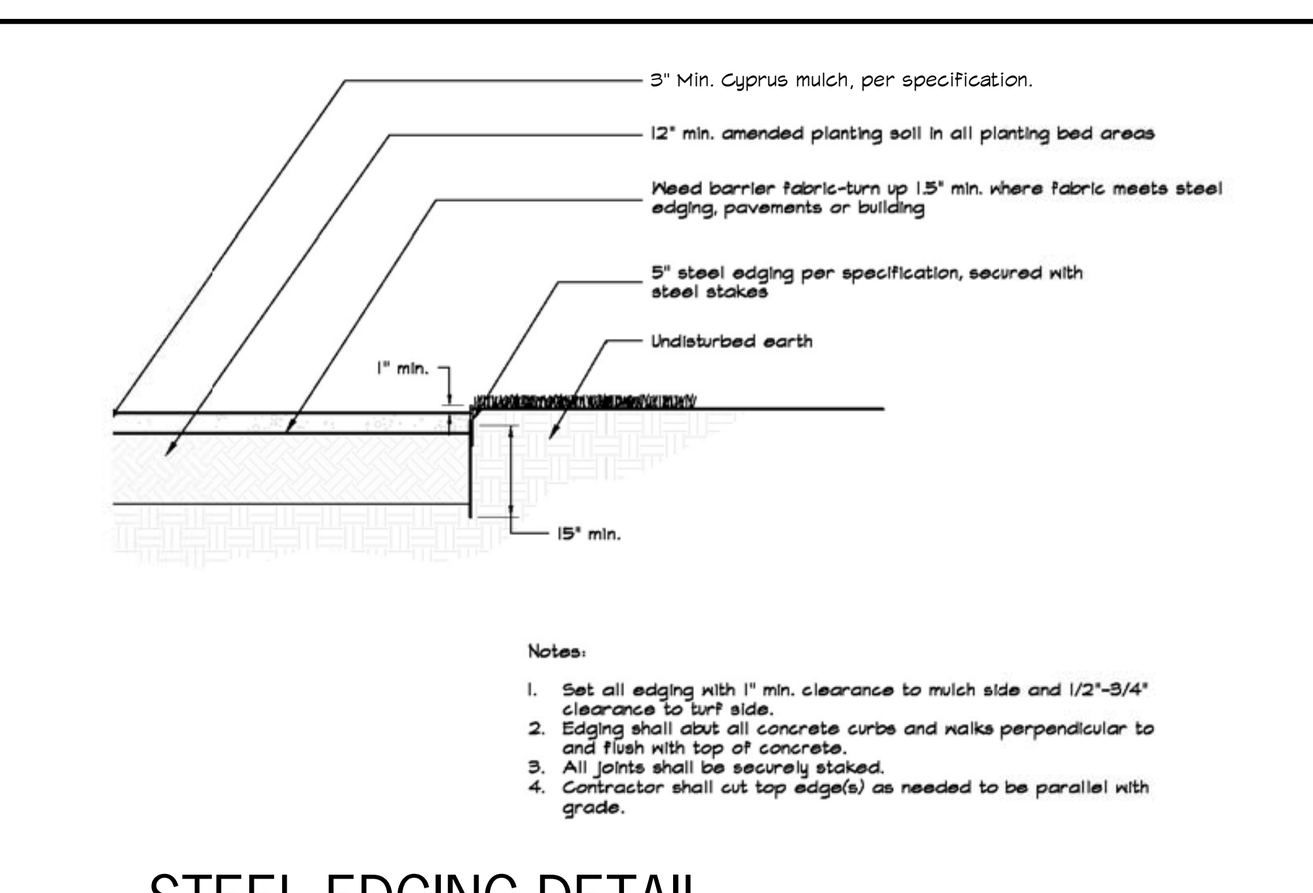

12 STEEL EDGING DETAIL
NOT TO SCALE

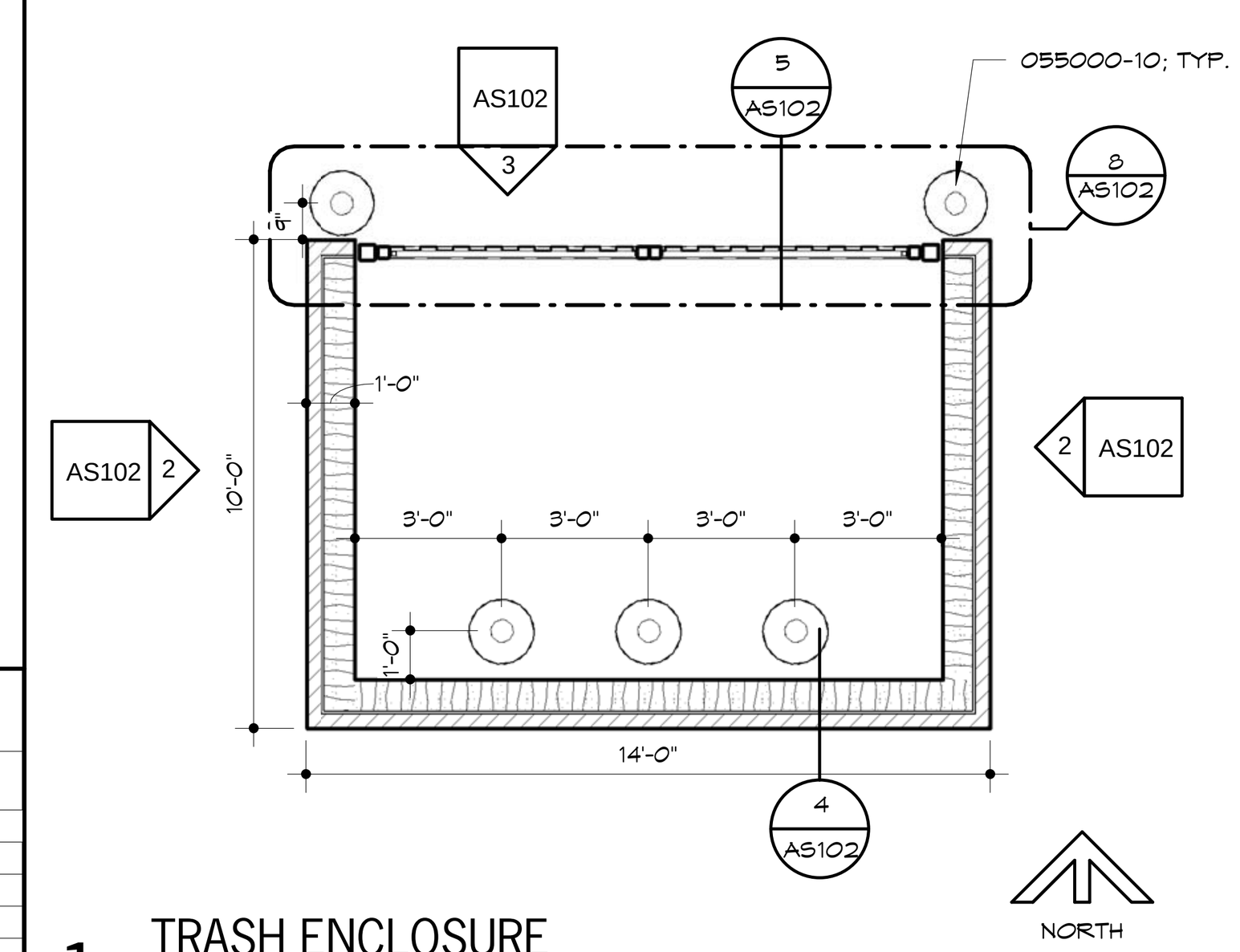

1 TRASH ENCLOSURE
1/4" = 1'-0"

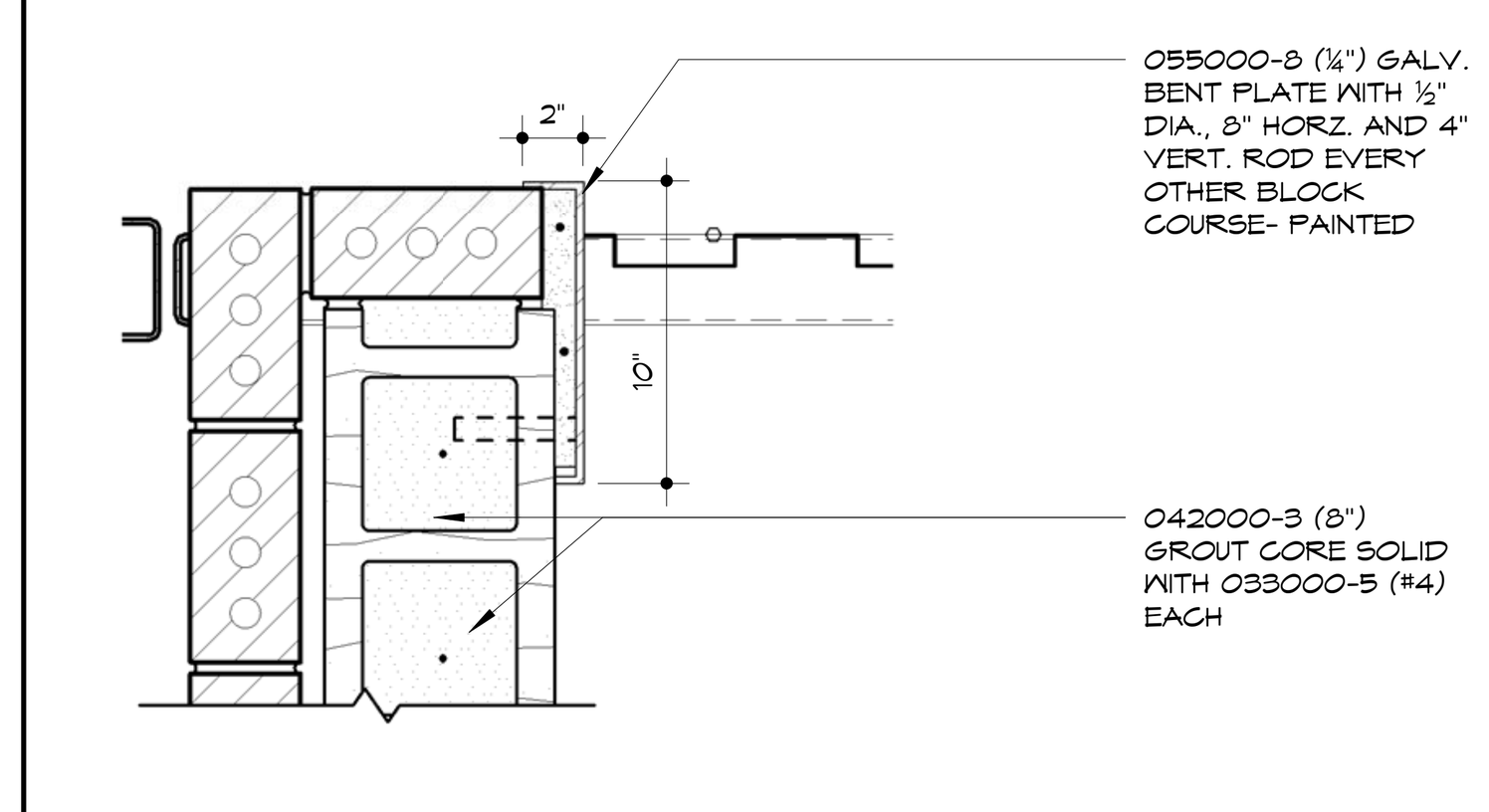

7 TRASH ENCLOSURE JAMB
1 1/2" = 1'-0"

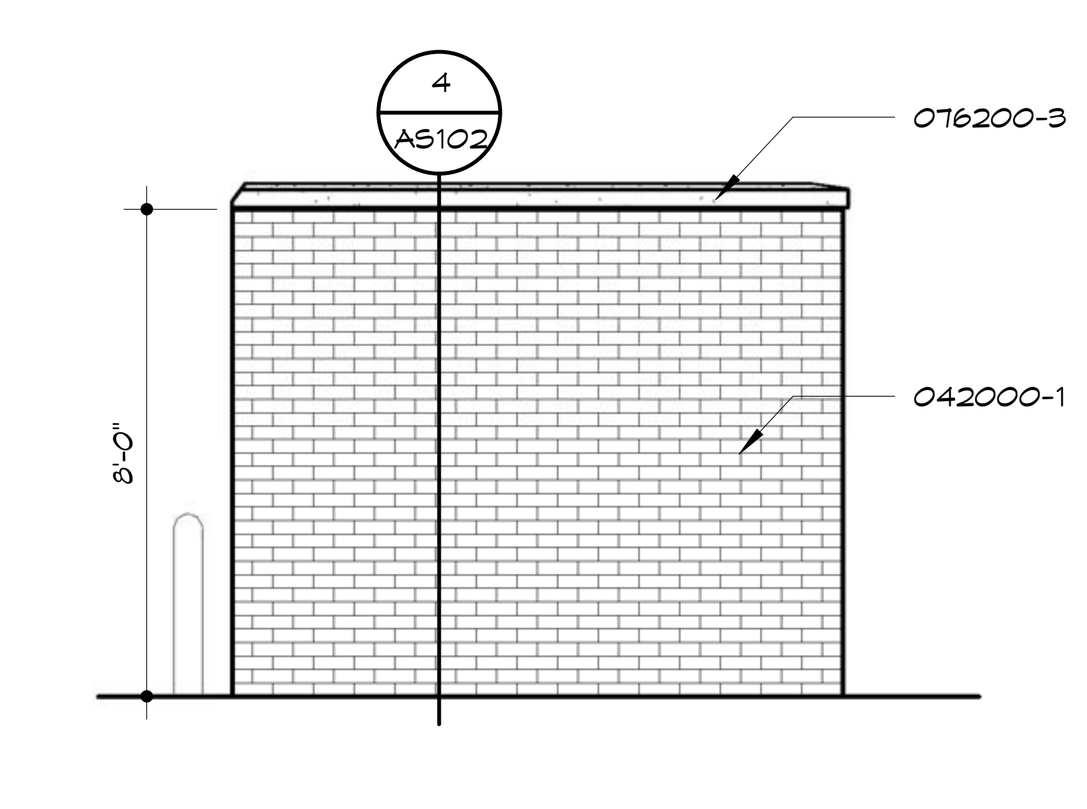

2 TRASH ENCLOSURE EAST/WEST ELEVATION
1/4" = 1'-0"

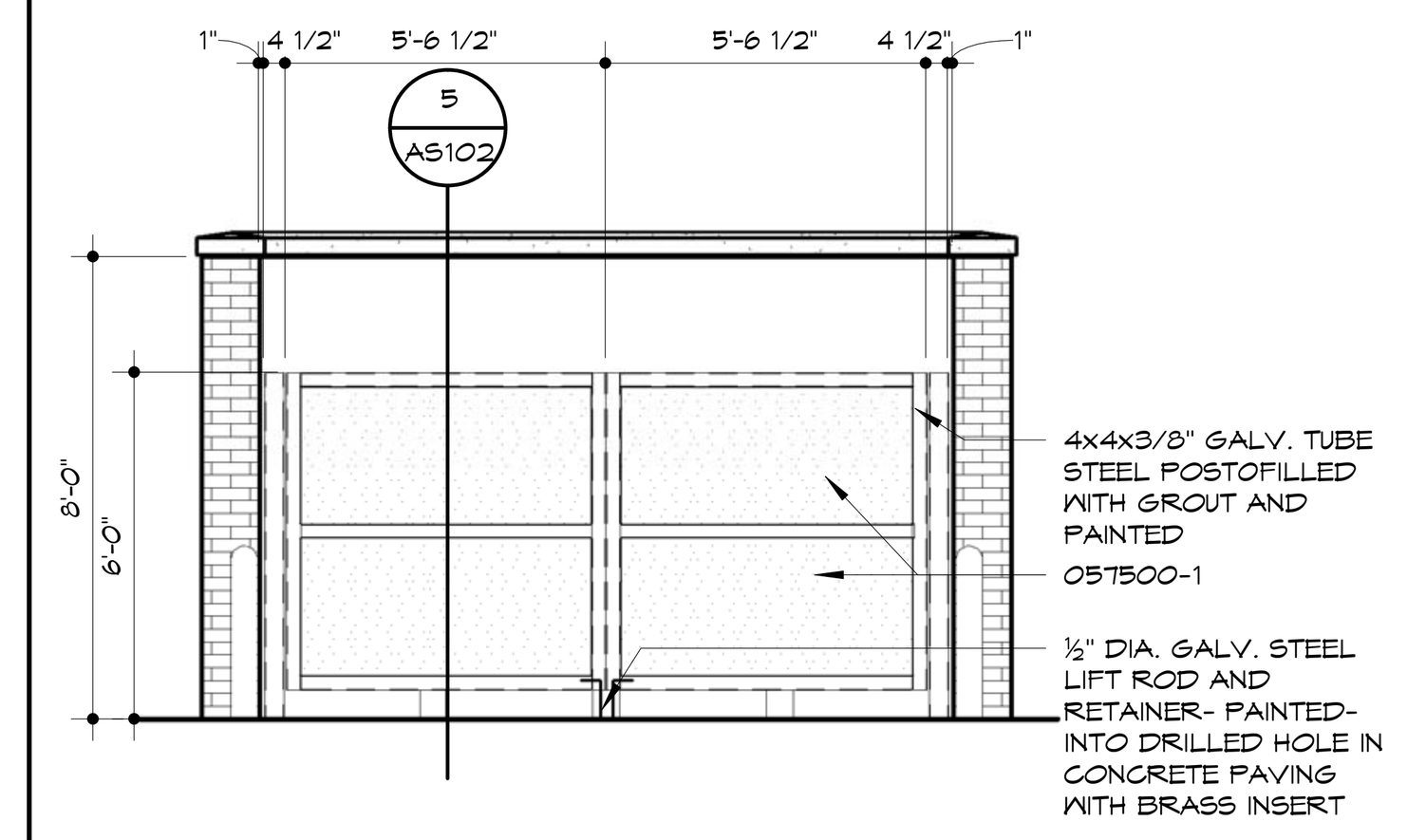

3 ENLARGED GATE ELEVATION
1/4" = 1'-0"

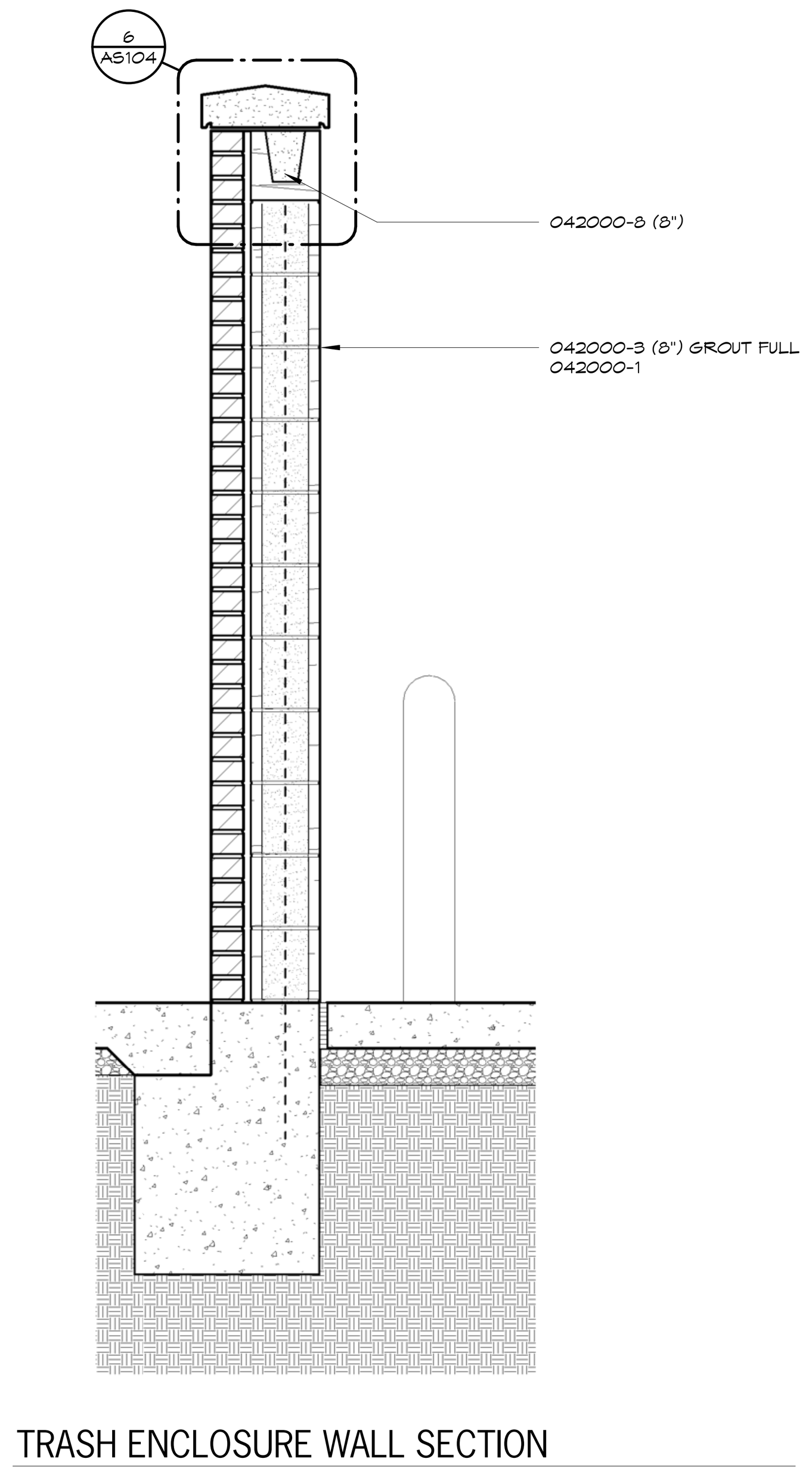

4 TRASH ENCLOSURE WALL SECTION
3/4" = 1'-0"

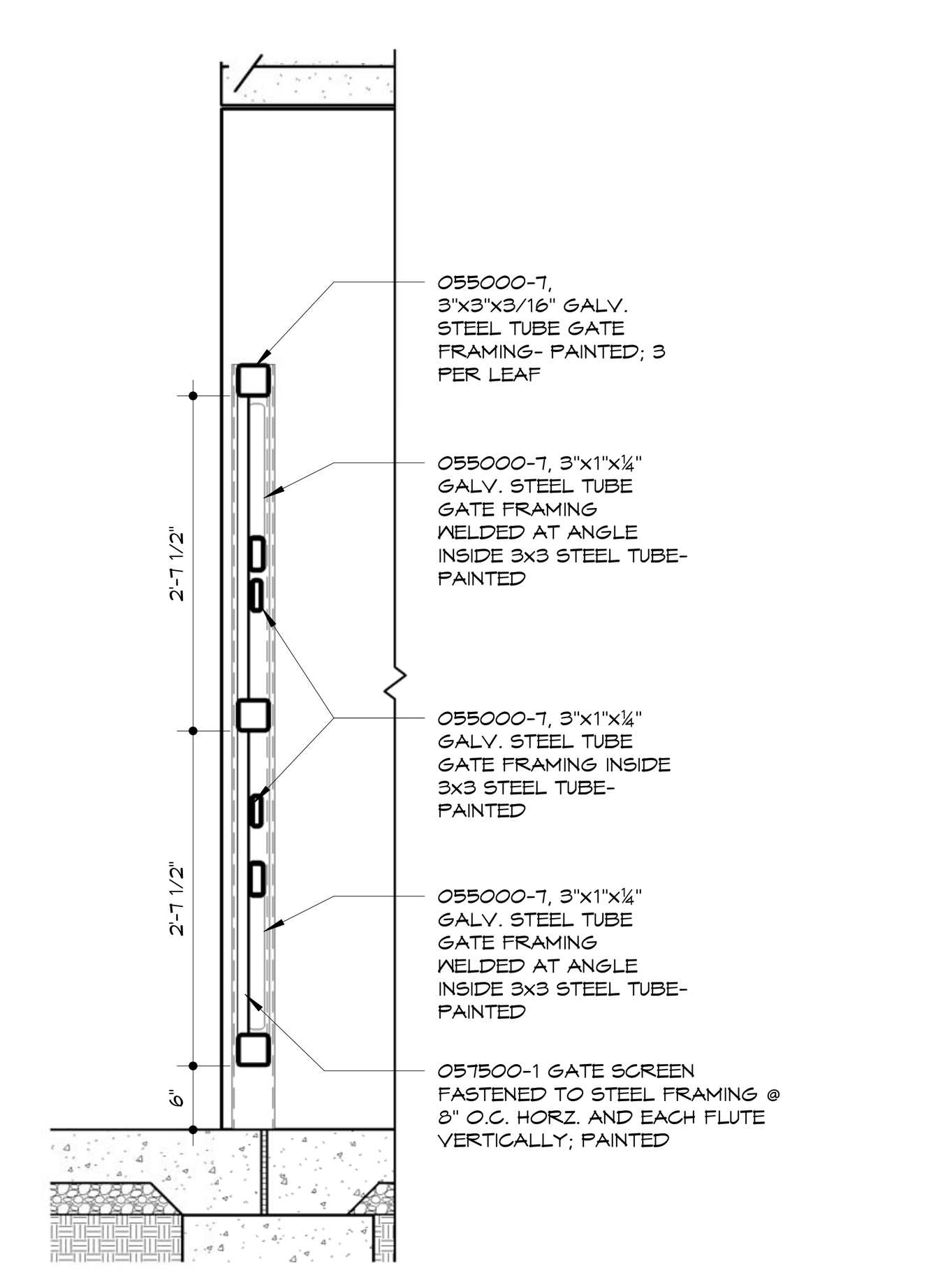

5 GATE SECTION
3/4" = 1'-0"

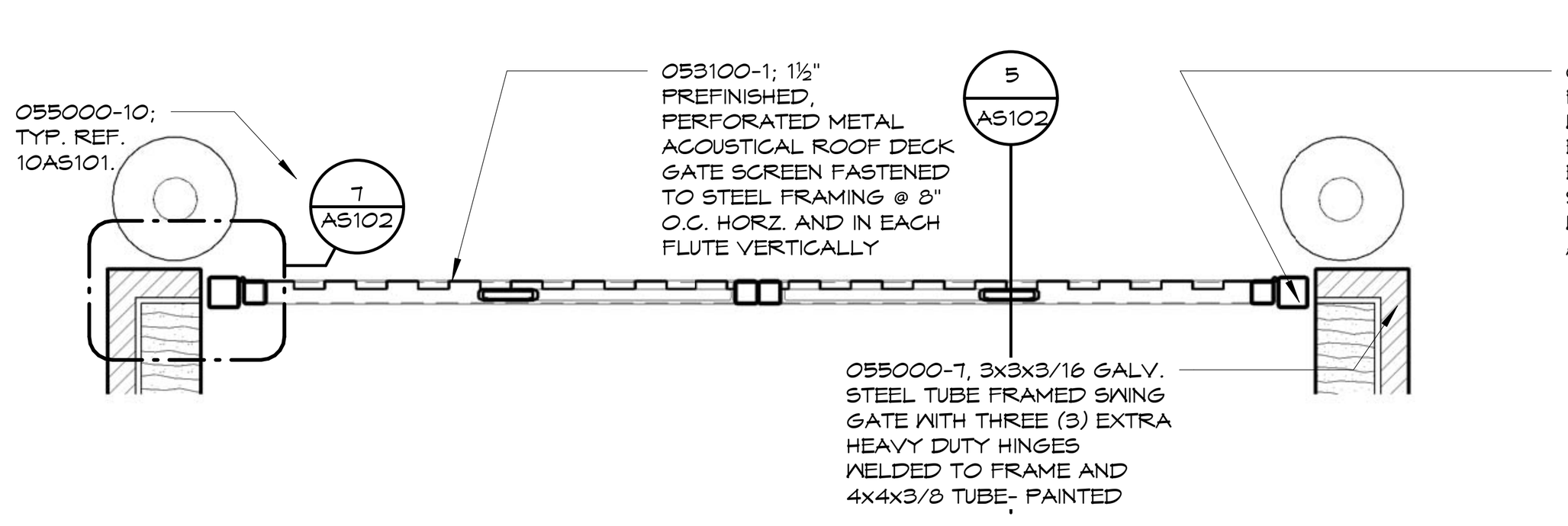

8 ENLARGED GATE PLAN
1/2" = 1'-0"

NOTE: REFER TO STRUCTURAL DRAWINGS FOR REINFORCING STEEL IN EXTERIOR WALLS AND CONCRETE NOT SHOWN

NOTE: REFER TO ALL DETAILS (DETAILS LOCATED ON THIS SHEET, PRECEEDING SHEETS AND FOLLOWING SHEETS) FOR APPLICABLE NOTES NOT SHOWN

NOTE: REFER TO ALL SECTIONS (SECTIONS LOCATED ON THIS SHEET, PRECEEDING SHEETS AND FOLLOWING SHEETS) FOR APPLICABLE NOTES NOT SHOWN

KEYNOTES

Note: Keynotes are drawn from a master list & may not be sequentially numbered. Sizes (Ex: 2x4) or other info. following keynote on drawings indicates criteria for those materials/locations which may differ from std. material specified.

033000 -1 Concrete Structure
-2 Concrete Floor Slab
-3 Vapor Barrier
-4 Welded Wire Fabric
-5 Steel Reinforcing Bar
-6 Rustication Joint
-7 Waterstop
-8 Dovetail Anchor
-9 Sidewalk
-10 Premolded Joint Filler
035300 -1 Concrete Topping
042000 -1 Face Brick
-2 Concrete Masonry Unit - Normal Weight (")
-3 Concrete Masonry Unit - Lightweight (")
-4 Wire Reinforcing
-5 Metal Tie/Anchor
-6 Through Wall Flashing
-7 Control Joint Strip
-8 Bond Beam (")
-9 Compressible Filler
-10 Weep Hole
-11 Cavity Drainage Material
-12 Termination Bar
044300 -1 Stone Masonry
-2 Anchor
-3 Stone Jamb
-4 Stone Sill
-5 Belt Course
047200 -1 Cast Stone
051200 -1 Steel Beams
-2 Steel Column
-3 Steel Tube
-4 Steel Channel
052100 -1 Steel Joist
-2 Joist - Extended End
-3 Joist - Ceiling Extension
053100 -1 Metal Decking
-3 Steel Composite Decking
-2 Flexible Closure Strips
054000 -1 Structural Steel Studs
-2 Structural Steel Joists
-3 "C" Closure
055000 -1 Steel Angle
-4 Steel Channel
-5 Steel Lintel
-6 Steel Pipe
-7 Steel Tube
-8 Steel Plate
-9 Steel Ladder
-10 Steel Bollard
055100 -1 Steel Stairs
-2 Steel Stair Stringer
-3 Steel Embed Plate
055213 -1 Steel Pipe Handrail
-2 Steel Pipe Rail/Post
-3 Steel Handrail Wall Bracket
-4 Steel Rod
055300 -1 Steel Grating
-2 Steel Frame
057300 -1 Decorative Metal Railings
057500 -1 Ornamental Metal Stamped Grille
061053 -1 2x Wood Nailer (")
-2 2x Wood Blocking (")
-3 1x Wood Continuous (")
-4 Plywood (")
-5 #30 Felt
-6 #15 Felt
-7 Sheathing (")
064116 -1 Interior Architectural Woodwork
-2 High Pressure Laminate
-3 Cabinet Liner Laminate
-4 Particle Board
-5 Plywood
-6 3mm Edge Molding
-7 Solid Wood Blocking
-8 Hardwood
-9 Steel Tube/Leg Frame
-10 Door Hinge
-11 Door/Drawer Pull
-12 Magnetic Catch
-13 Drawer
-14 Shelf Supports
-15 Countertop
-16 Solid-Surfacing Material
071113 -1 Bituminous Dampproofing
071326 -1 Self-Adhering Sheet Waterproofing
072100 -1 Foundation Wall or Under Slab Insulation (R-)
-2 Cavity Wall Insulation (R-)
-3 Building Insulation - Unfaced (R-)
-4 Building Insulation - Faced (R-)
-5 Sill Sealer
-6 Safing Insulation
072726 -1 Fluid Applied Membrane Air Barrier
-2 Flashing Tape
074213 -1 Metal Wall Panel (Type 1)
-2 Trim
-3 Z-Furring (")
-4 Metal Wall Panel (Type 2)
-5 Metal Soffit Panel
075423 -1 Thermoplastic Polyolefin (TPO) Roofing
-2 Roof Insulation Flat
-3 Roof Insulation Tapered
-4 Roof Expansion Joint
-5 Coverboard
-6 Walkway Protection Board
076200 -1 Sheet Metal Flashing and Counterflashing
-2 Pre-finished Roof Edge
-3 Pre-finished Coping
-4 Sheet Metal Reglet
-5 Sheet Metal Gutter
-6 Sheet Metal Downspout
-7 Sheet Metal Scupper
077129 -1 Roof Expansion Joint
077200 -1 Roof Hatch/Ladder
078413 -1 Penetration Firestopping
078443 -1 Joint Firestopping
079200 -1 Sealant - Rake where required
-2 Joint Filler
-3 Gasket
-4 Backer Rod
079500 -1 Expansion Control

081113 -1 Steel Door
-2 Steel Frame
-3 Frame Anchor
-4 Louver
-5 Plaster Guard
-6 FPR Door
081416 -1 Flush Wood Door
083113 -1 Access Door
-2 Access Door Frame
-3 Floor Access Door
083323 -1 Overhead Coiling Door
-2 Coiling Counter Door
083613 -1 Sectional Overhead Door
-2 Sectional Overhead Door Track
-3 Weatherstripping
084113 -1 Aluminum Entrance Door
-2 Aluminum Entrance Frame
-3 Sunshade
-4 Aluminum Subsill
084413 -1 Glazed Aluminum Curtain Wall
-2 Threshold
-3 Sunshade Louver
-4 Aluminum Subsill
087100 -1 Track Hardware
088000 -1 Glazing (as scheduled)
088853 -1 Securtiy Glazing (as scheduled)
089119 -1 Louvers and Vents
092216 -1 Steel Stud (")
-2 Steel Stud Runner (")
-3 Furring Channel (")
092400 -1 Portland Cement Plastering
-2 Metal Lath
-3 Casing Bead
092900 -1 Gypsum Board (")
-2 Fire Rated Gypsum Board (")
-3 Cementitious Tile Backer Panel
-4 Metal Suspension System
-5 Acoustical Sealant
-6 Acoustical Insulation (")
-7 Metal Edge Trim
-8 Auxiliary Support Framing
-9 Metal Control Joint
-10 High Impact Gypsum Board
-11 Concrete Interior Finishing Compound
-12 Stiffener
093000 -1 Porcelain Wall Tile (" x ")
-2 Shower Pan
-3 Shower Pan Flashing
-4 Porcelain Floor Tile (" x ")
-5 Tile Base
-6 Tile Cap
-7 Setting Bed
-8 Uncoupling water-proof membrane
-9 Shower Splashguard
-10 Shower Niche
095113 -1 Acoustical Panel ('x ') (F = Fire Rated)
-2 Ceiling Suspension System
-3 Edge Mold Trim
-4 Auxiliary Support Framing
096513 -1 Resilient Tile Flooring
-2 Resilient Wall Base
-3 Edge Strip
-4 Tactile Warning Surface
-5 Resilient Stair Tread
-6 Resilient Stair Riser
-7 Resilient Stringer Skirt
-8 Resilient Stair Nose
096813 -1 Carpet Tile
096900 -1 Access Flooring
099113 -1 Exterior Painting
099123 -1 Interior Painting
099635 -1 Secondary Containment Coating System
101400 -1 Signage
102113 -1 Toilet Partition
-2 Urinal Screen
102213 -1 Wire Mesh Partitions
102600 -1 Impact-Resistant Cornerguard
102800 -1 Tissue Dispenser
-2 Framed Mirror
-3 Sanitary Napkin Disposer
-4 Grab Bar
-5 Shower Seat
-6 Shower Curtain Rod
-7 Coat/Robe Hook
-8 Shower Curtain
104413 -1 Fire Extinguisher Cabinet
104416 -1 Fire Extinguisher
105113 -1 Personnel Locker
-2 Locker
-3 Bench
105300 -1 Pre- Manufactured Canopies
107500 -1 Flagpole
108113 -1 Deterrent Spikes
122413 -1 Roller Window Shades
133600 -1 Spray Painting Booth
142400 -1 Hydraulic Elevator
311000 -1 Site Clearing
312000 -1 Earth Moving
-2 Interior Fill
-3 Exterior Fill
-4 Granular Drainage Course
-5 Subbase Course
321313 -1 Concrete Paving
334600 -1 Perforated Wall Pipe & Fittings
-2 Geotextile Filter Fabric (Flat/Sock)
-3 Drainage Panel

HTK ARCHITECTS PA
900 S. KANSAS AVE., SUITE 200
TOPEKA KANSAS 66612
P 785.266.5373
9300 W 110TH ST. STE. 150
OVERLAND PARK, KANSAS 66210
P 913.663.5373
www.htkarchitects.com

R. KEITH BLACKBURN LICENSED 3435 4-15-15 KANSAS PROFESSIONAL ARCHITECT

DENNIS A. HAUG LICENSED 4-15-15 2567 KANSAS PROFESSIONAL ARCHITECT

DATE:
- 4-15-15

REVISED DATE:
- 12-18-14
- 2-9-15
- 3-10-15
-

HTK PROJECT NUMBER:
- 1410.03

Department of Administration
Office of Facilities and Procurement Management
800 SW Jackson, Suite 700
Topeka, Kansas 66612-1216
Phone 785-296-8899
FAX 785-296-3456

STATE OF KANSAS
STATE OF KANSAS ENERGY & SERVICE CENTER
221 SW 7th Street
BUILDING NUMBER 17300-0038

DATE: 4-15-15 DRAWN BY: Author CHECKED BY: Checker REV:

LANDSCAPE PLAN AND SITE DETAILS

A-012651

AS102

CONSTRUCTION DOCUMENTS

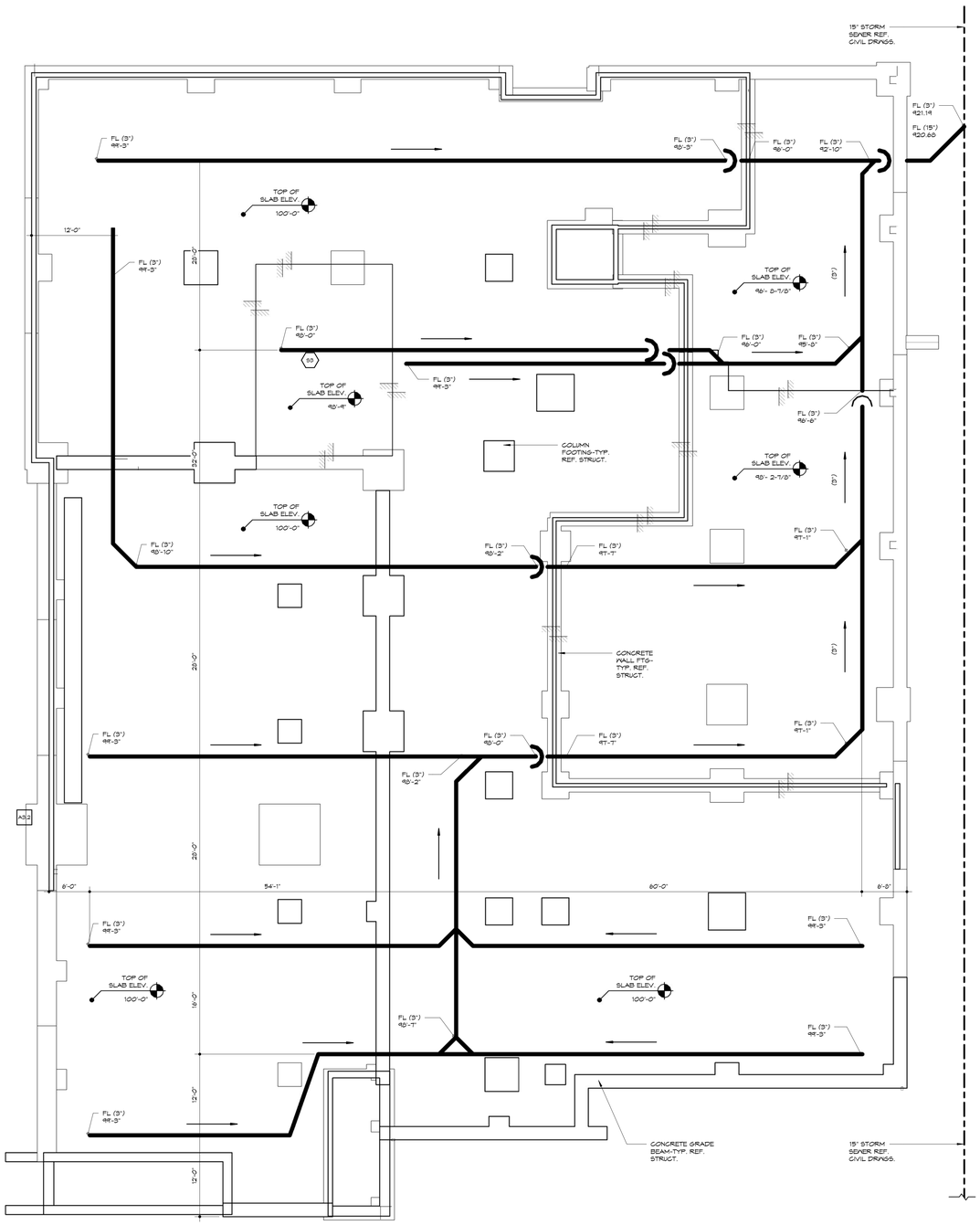

1 UNDERSLAB DRAINAGE SYSTEM
1/8" = 1'-0"

NORTH

DRAIN PLAN LEGEND

LINE OF FLOOR ELEVATION CHANGE

DIRECTION OF FLOW

UNDER FLOOR DRAIN LINE (3" DIA. TYPICAL U.N.O.)

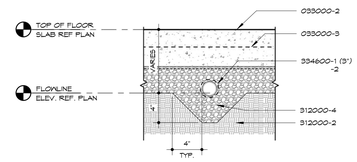

2 UNDER FLOOR DRAIN
1 1/2" = 1'-0"

CAPITAL STAIR SITE PLAN NOTES

1. NEW CAPITAL STAIRWAY.
2. EXISTING CONCRETE SIDEWALK TO BE REMOVED.
3. EXISTING PLANTING BED AND STEEL EDGING TO BE REMOVED.
4. EXISTING SIDEWALK TO REMAIN.
5. EXISTING PLANTING BED AND STEEL EDGING TO REMAIN.
6. NEW 4" CONCRETE SIDEWALK.
7. RESEED AND ESTABLISH ALL AREAS.
8. ALIGN NEW SIDEWALK WITH EXISTING VENT SHAFTS.
9. EXISTING DRIVE AND CURB.

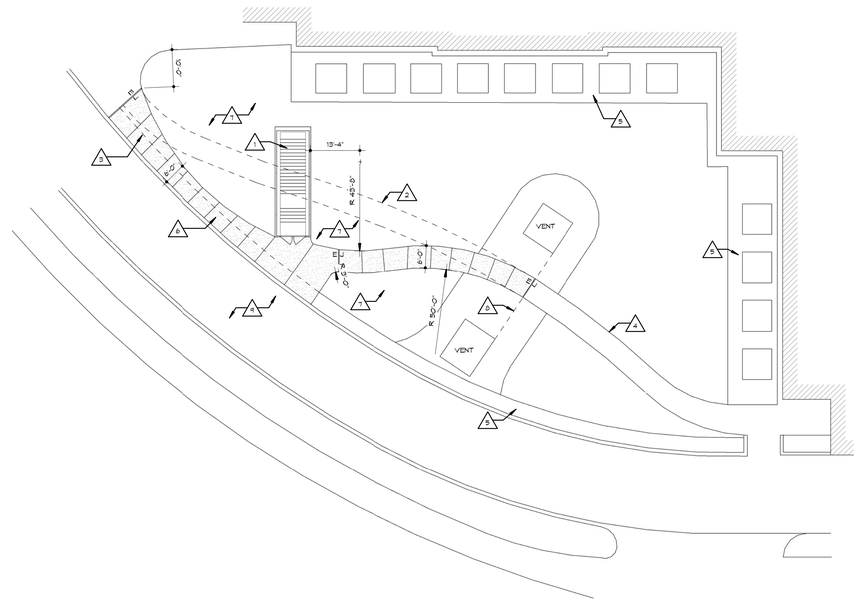

3 CAPITAL STAIR SITE PLAN
1/16" = 1'-0"

NORTH

NOTE: REFER TO STRUCTURAL DRAWINGS FOR REINFORCING STEEL IN EXTERIOR WALLS AND CONCRETE NOT SHOWN

NOTE: REFER TO ALL DETAILS (DETAILS LOCATED ON THIS SHEET, PRECEEDING SHEETS AND FOLLOWING SHEETS) FOR APPLICABLE NOTES NOT SHOWN

NOTE: REFER TO ALL SECTIONS (SECTIONS LOCATED ON THIS SHEET, PRECEEDING SHEETS AND FOLLOWING SHEETS) FOR APPLICABLE NOTES NOT SHOWN

HTK ARCHITECTS PA
9300 W 110TH ST. STE. 150
OVERLAND PARK, KANSAS 66210
P 913.663.3373
900 S. KANSAS AVE., SUITE 200
TOPEKA KANSAS 66612
T 785.266.3373 www.htkarchitects.com

DATE:
- 4-15-15

REVISED DATE:
- 12-18-14
- 2-9-15
- 3-10-15
-

HTK PROJECT NUMBER:
- 1410.03

Department of Administration
Office of Facilities and
Procurement Management
800 SW Jackson, Suite 700
Topeka, Kansas 66612-1216
Phone: 785-296-0899
FAX 785-296-3456

STATE OF KANSAS
STATE OF KANSAS ENERGY & SERVICE CENTER
221 SW 7th Street
BUILDING NUMBER 17300-0038
DRAWN BY: Author CHECKED BY: Checker REV:
DATE: 4-15-15

UNDERSLAB DRAINAGE

A-012651

AS103

CONSTRUCTION DOCUMENTS

4/16/2015 11:12:26 AM C:\Users\jms\Documents\REVIT\State of Kansas Energy_Central_jms.rvt

JCSBC
2-2-2016
AtL9G..=0025

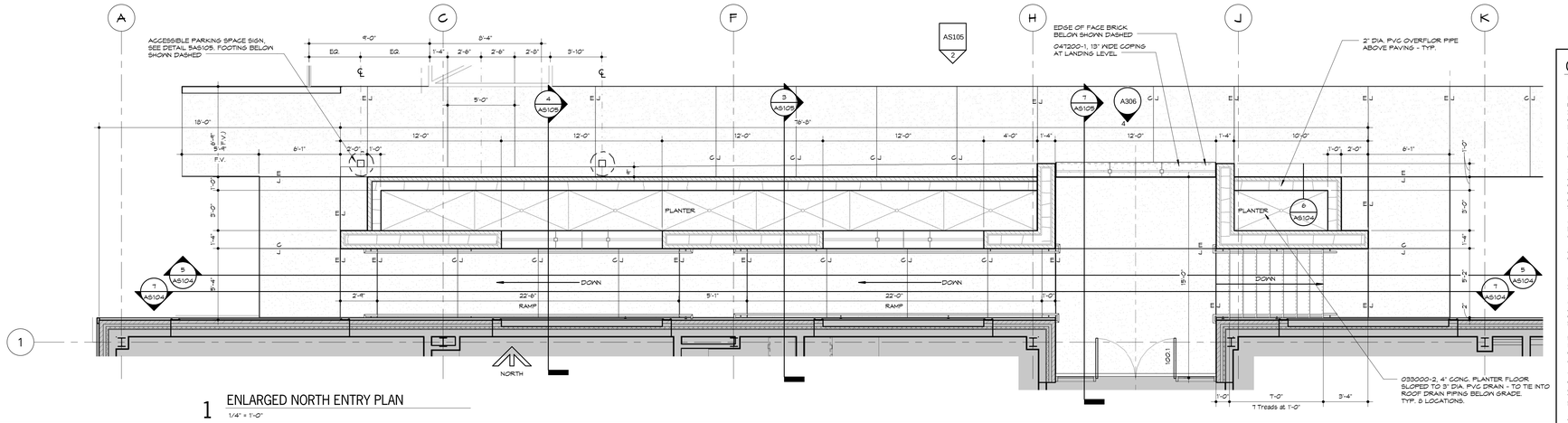

1 ENLARGED NORTH ENTRY PLAN
1/4" = 1'-0"

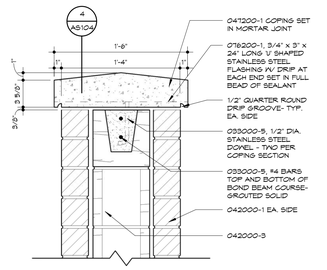

2 WALL PRECAST COPING
1 1/2" = 1'-0"

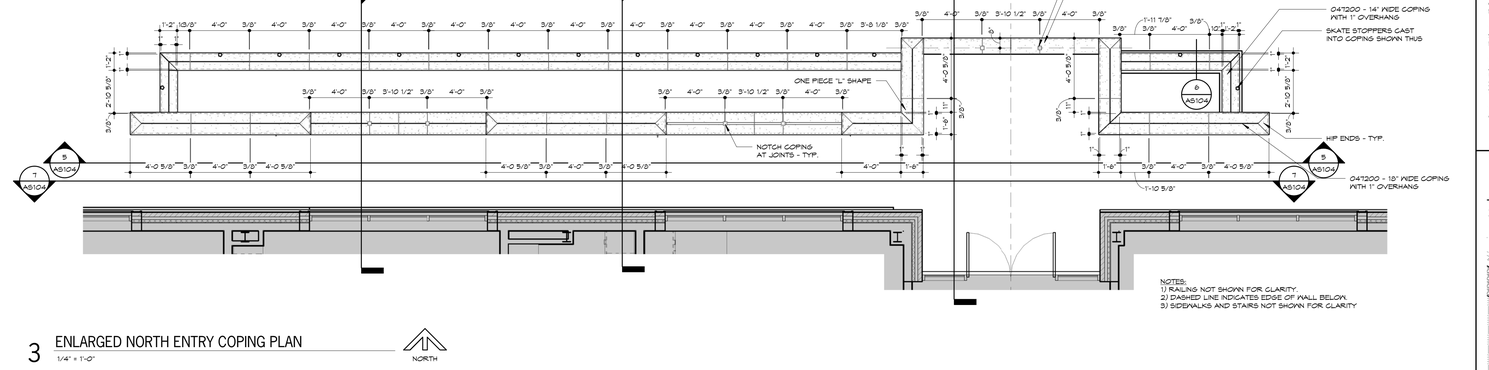

3 ENLARGED NORTH ENTRY COPING PLAN
1/4" = 1'-0"

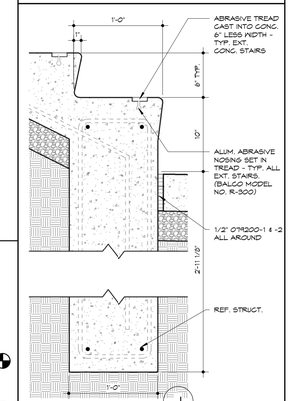

8 SECTION - STAIR BOTTOM OF RUN
1 1/2" = 1'-0"

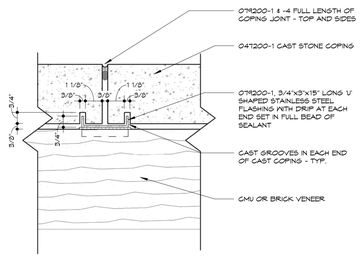

4 COPING FLASHING SECTION
3" = 1'-0"

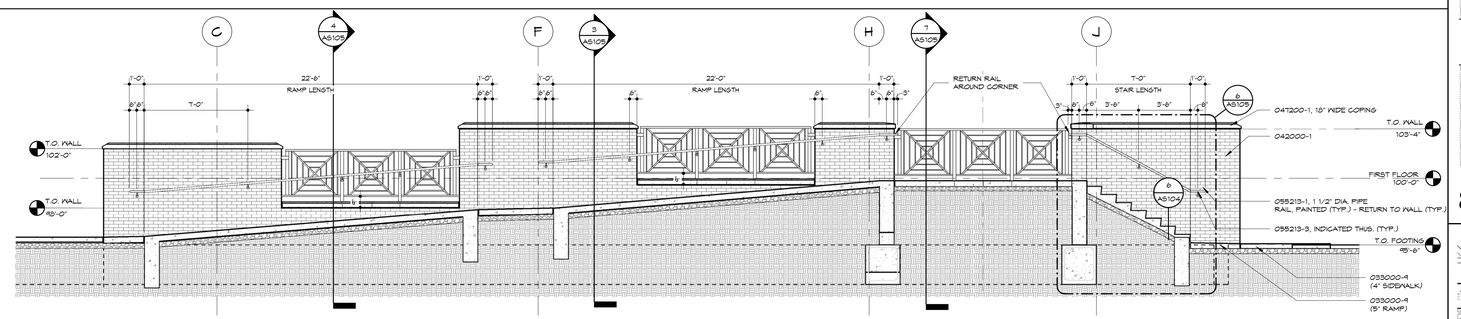

5 STAIR / LANDING / RAMP SECTION
1/4" = 1'-0"

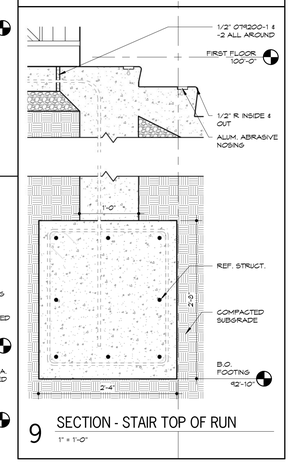

9 SECTION - STAIR TOP OF RUN
1" = 1'-0"

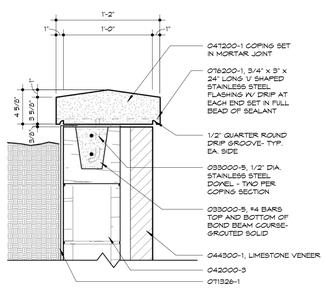

6 COPING AT PLANTER & TRASH ENCLOSURE
1 1/2" = 1'-0"

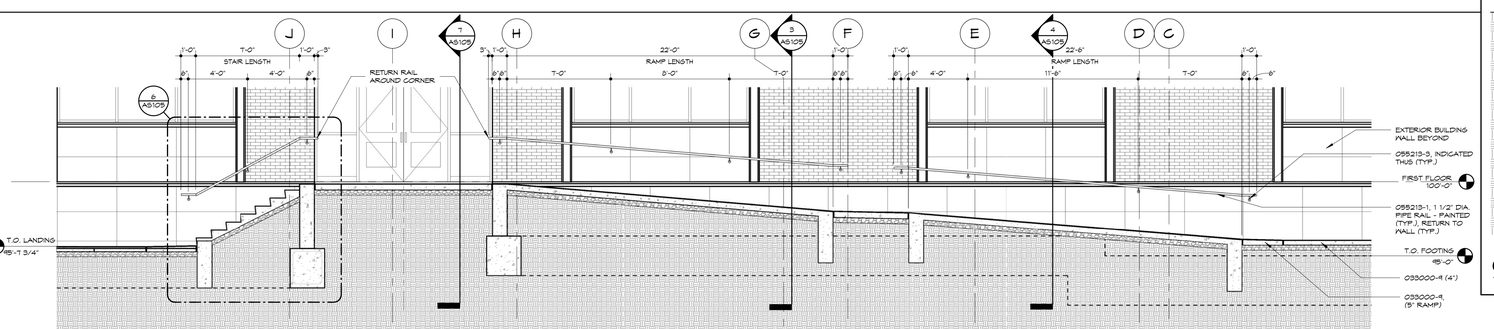

7 STAIR / LANDING / RAMP SECTION
1/4" = 1'-0"

GENERAL SITE NOTES

1) ALL UTILITY INFORMATION SHOWN HEREIN IS BASED ON THE INFORMATION AVAILABLE. THE CONTRACTOR SHALL VERIFY ALL UTILITY DEPTHS & LOCATIONS PRIOR TO CONSTRUCTION. ANY DAMAGE CAUSED BY THE CONTRACTOR'S CONSTRUCTION OPERATIONS SHALL BE REPAIRED AT THE CONTRACTOR'S EXPENSE.

2) ALL GROUND SURFACES SHALL VARY UNIFORMLY BETWEEN INDICATED ELEVATIONS. GRADING PLAN REFLECTS TOP OF TURF OR PAVEMENT ELEVATIONS U.N.O.

3) AFTER CONSTRUCTION COMPLETION, STAGING, PARKING, AND STORAGE AREA SHALL BE RESTORED TO THE PRE-CONSTRUCTION CONDITIONS. ANY DAMAGE TO OR REMOVAL OF EXISTING CONDITIONS OCCURRING ON-SITE DURING CONSTRUCTION SHALL BE REPAIRED OR REPLACED TO THE SATISFACTION OF THE OWNER.

4) CARE SHALL BE EXERCISED TO PRESERVE AND/OR PROTECT EXISTING TREES AND VEGETATION OUTSIDE OF AREAS TO BE GRADED. ANY NECESSARY REPAIR OF THESE AREAS DAMAGED BY THE GENERAL CONTRACTOR AND/OR HIS ASSIGNEES SHALL BE THE SOLE RESPONSIBILITY OF THE CONTRACTOR AND SHALL BE PERFORMED TO THE SATISFACTION OF THE OWNER.

5) CONTRACTOR SHALL PROVIDE AND MAINTAIN POSITIVE DRAINAGE DURING CONSTRUCTION.

6) THE CONTRACTOR IS RESPONSIBLE FOR THE PROVISION OF ALL MATERIALS, TOOLS, EQUIPMENT AND LABOR NECESSARY TO CONTROL EROSION, SILTATION AND DISCHARGES OF FILL MATERIAL (SEDIMENT) INTO DOWNSTREAM SYSTEMS OR RECEIVING CHANNELS. THIS SHALL BE REQUIRED DURING ALL PHASES OF CONSTRUCTION AND UNTIL SUITABLE GROUND COVER IS ESTABLISHED FOR ALL DISTURBED AREAS. IF ANY METHOD OF CONTROL FAILS, THE CONTRACTOR SHALL NOTIFY THE ARCHITECT IMMEDIATELY.

7) ALL METHODS AND MEANS OF CONSTRUCTION PERFORMED ON THIS PROJECT SHALL CONFORM TO THE DESIGN CRITERIA AND STANDARD TECHNICAL SPECIFICATIONS FOR THE CITY OF TOPEKA AND SHAWNEE COUNTY, KANSAS, CURRENT EDITION. THE MORE STRINGENT REQUIREMENT SHALL APPLY FOR DISCREPANCIES BETWEEN THE CONTRACT DOCUMENTS AND THE SAID SPECIFICATIONS.

8) ALL DISTURBED AREAS SHALL BE SEEDED, FERTILIZED AND MULCHED WITHIN 14 DAYS OF THE COMPLETION OF WORK IN EACH AREA IN ACCORDANCE WITH THE TECHNICAL SPECIFICATIONS.

9) CONTRACTOR SHALL LIMIT SITE DISTURBANCE TO ALL PRACTICAL EXTENTS, TO THOSE AREAS SHOWN FOR CONSTRUCTION OPERATIONS.

10) OWNER SHALL PROVIDE REQUIRED GEOTECHNICAL MATERIALS AND CONSTRUCTION TESTING. CONTRACTOR SHALL COORDINATE WITH AND NOTIFY GEOTECHNICAL ENGINEER OF REQUIRED TESTING SCHEDULE.

11) SIX (6) FOOT CHAIN LINK PERIMETER FENCING AND ROCK SURFACING IS REQUIRED FOR ANY STORAGE, STAGING OR PARKING.

12) ALL DRIVE LANES ON THE SCHOOL CAMPUS, OUTSIDE OF THE AREA OF THE CONSTRUCTION FENCING SHALL BE KEPT CLEAR FOR SCHOOL TRAFFIC. THE SCHEDULE OF CONSTRUCTION DELIVERIES SHALL BE COORDINATED WITH THE OWNER IN ORDER TO AVOID BEFORE AND AFTER SCHOOL TRAFFIC.

13) ALL CONCRETE SIDEWALKS SHALL HAVE A SLOPE NO GREATER THAN 1\12.

HTK ARCHITECTS PA
9300 W 110TH ST. STE. 150
OVERLAND PARK, KANSAS 66210
P 913.663.3373
900 S. KANSAS AVE., SUITE 200
TOPEKA KANSAS 66612
T 785.266.3373
www.htkarchitects.com

DATE:
- 4-15-15

REVISED DATE:
- 12-18-14
- 2-9-15
- 3-10-15

HTK PROJECT NUMBER:
- 1410.03

Department of Administration
Office of Facilities and
Procurement Management
800 SW Jackson, Suite 700
Topeka, Kansas 66612-1216
Phone: 785-296-2376
FAX: 785-296-3456

STATE OF KANSAS
STATE OF KANSAS ENERGY & SERVICE CENTER
221 SW 7th Street
BUILDING NUMBER 17300-0038
DATE: 4-15-15 DRAWN BY: Author CHECKED BY: Checker REV:

NORTH ENTRY PLANS AND DETAILS

A-012651

AS104

CONSTRUCTION DOCUMENTS

4/16/2015 11:12:43 AM C:\Users\jms\Documents\REVIT\State of Kansas Energy_Central_jms.rvt

JCSBC
2-2-2016
AIUG--0026

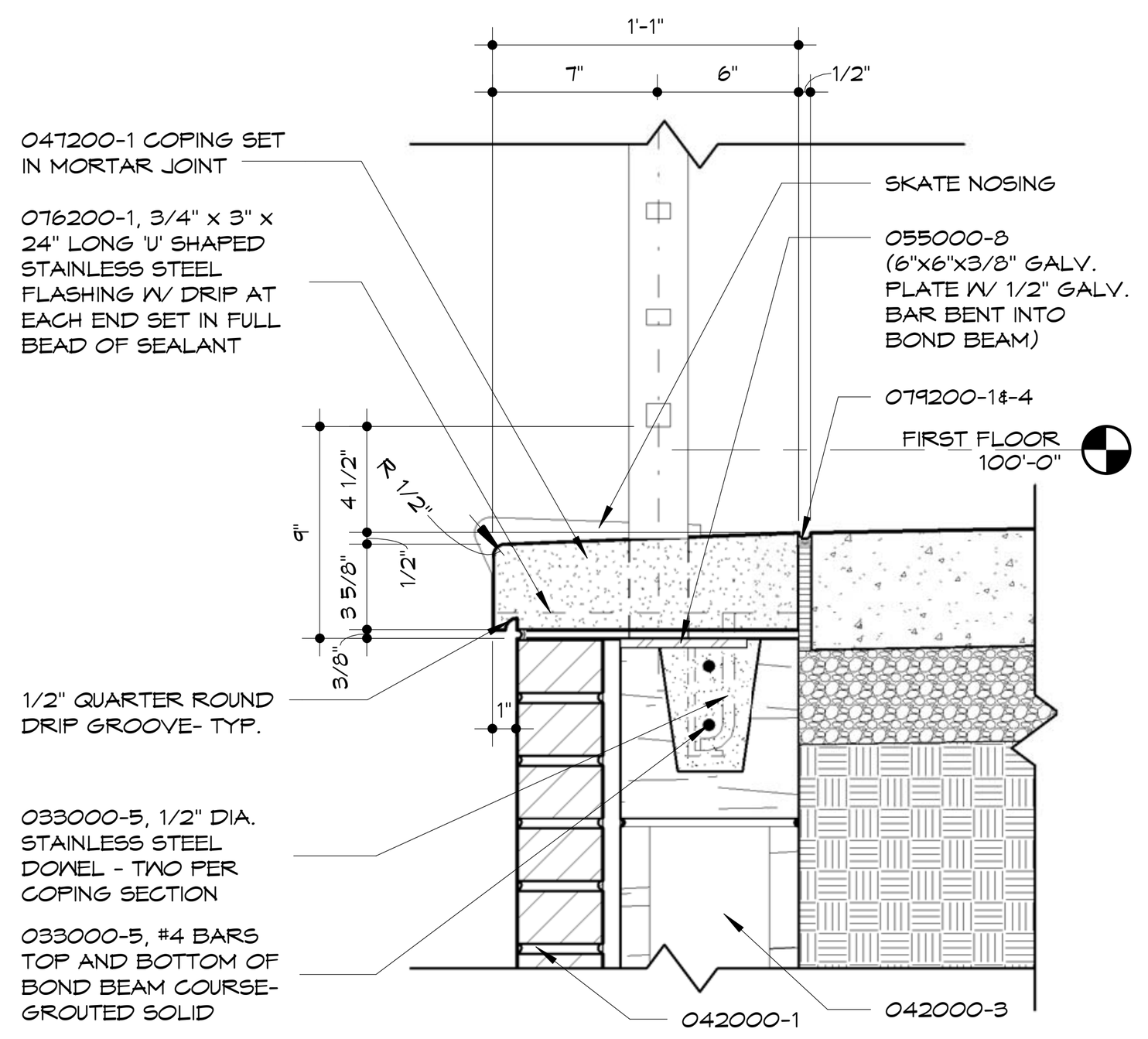

1 COPING AT NORTH EDGE OF LANDING
1 1/2" = 1'-0"

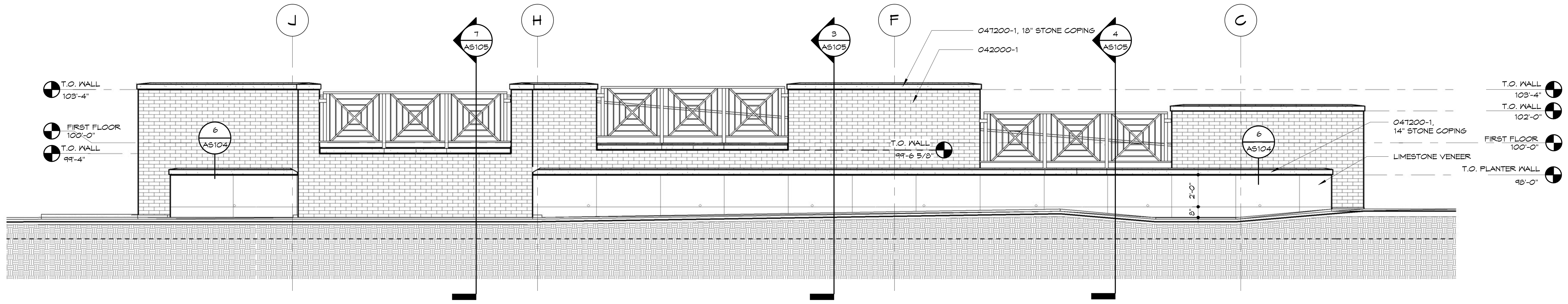

2 NORTH EXTERIOR ENTRY ELEVATION
1/4" = 1'-0"

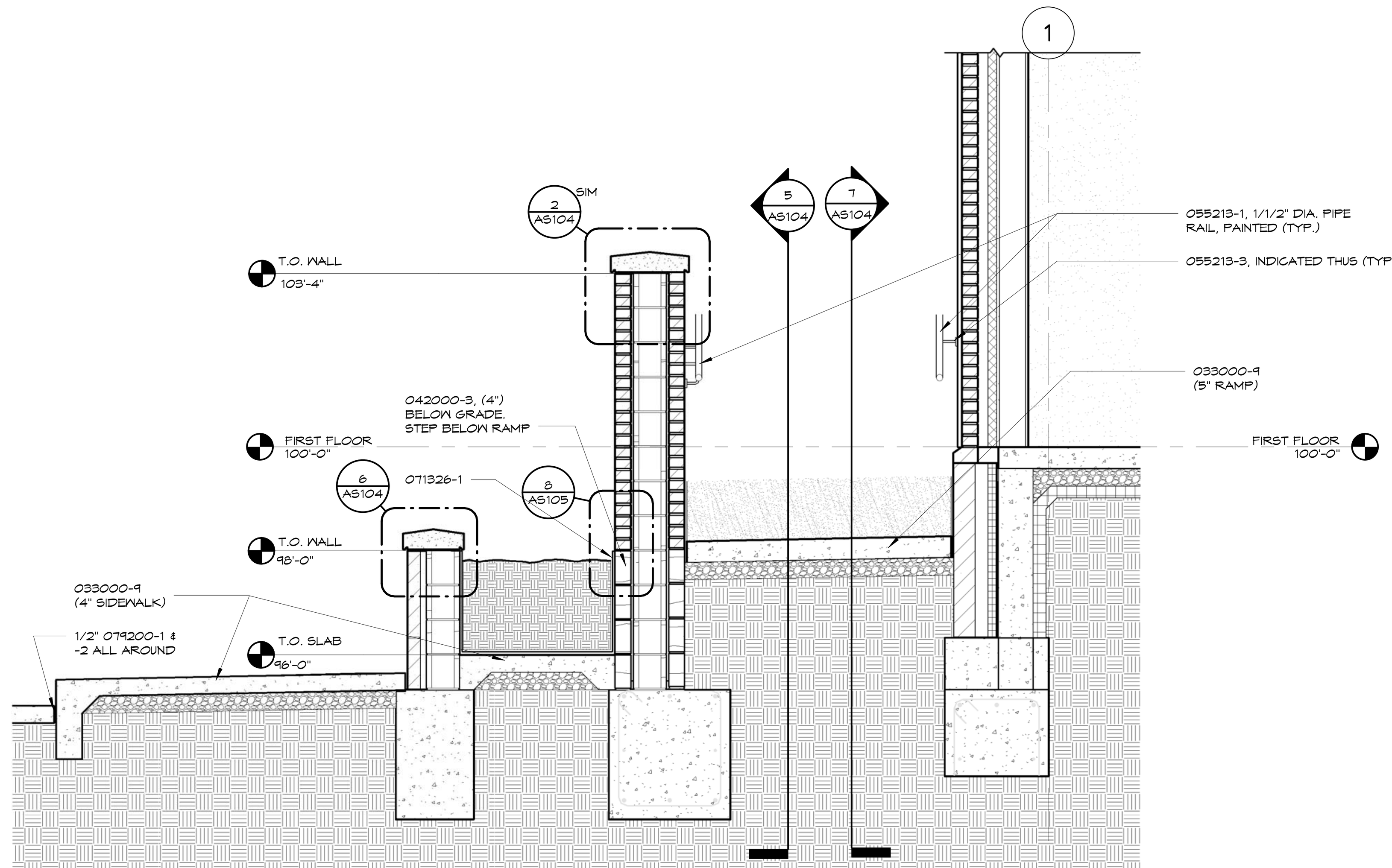

3 EXTERIOR RAMP SECTION AT WALL
1/2" = 1'-0"

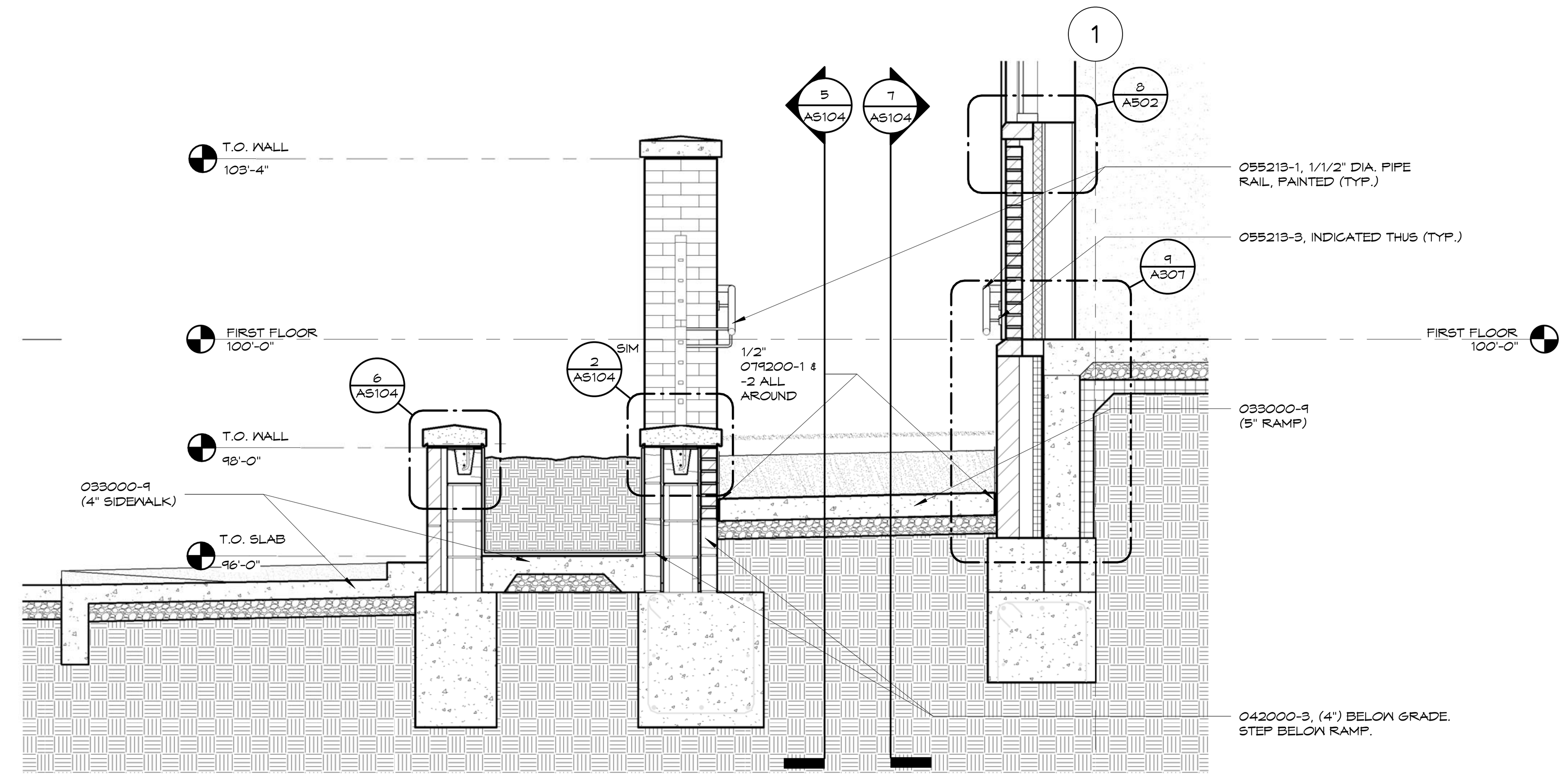

4 EXTERIOR RAMP SECTION AT RAIL
1/2" = 1'-0"

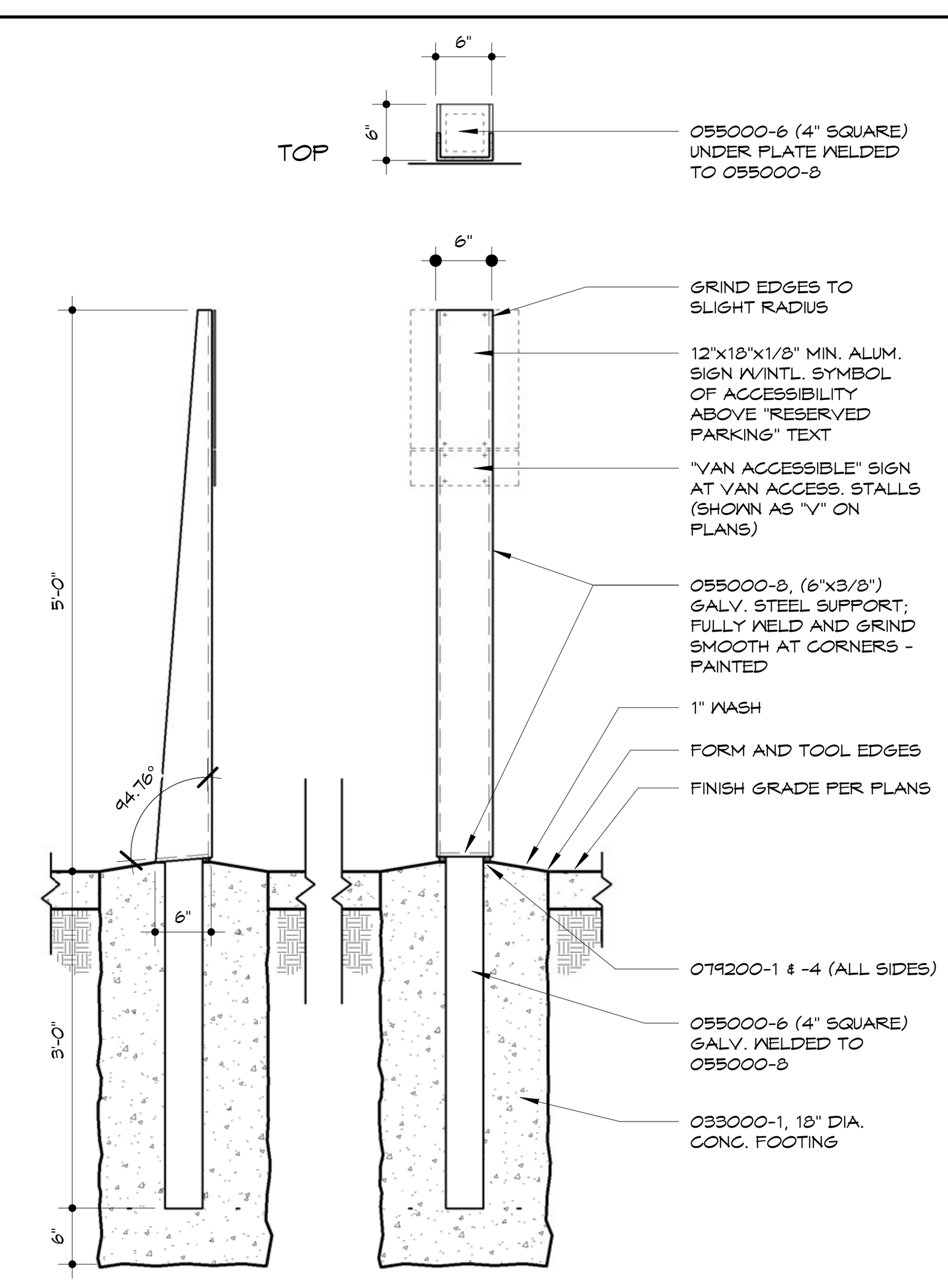

5 ACCESSIBLE PARKING SIGN
3/4" = 1'-0"

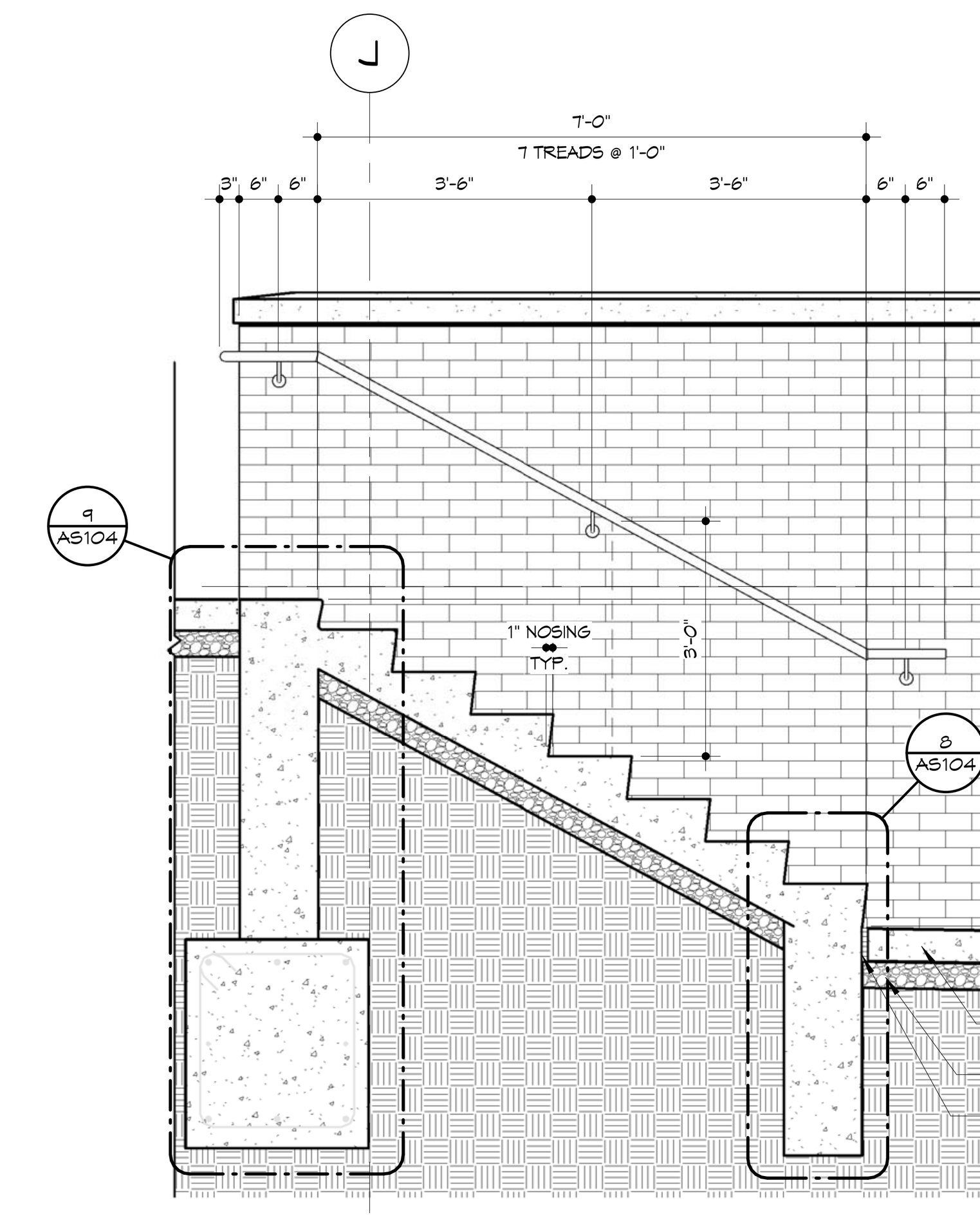

6 EXTERIOR STAIR
1/2" = 1'-0"

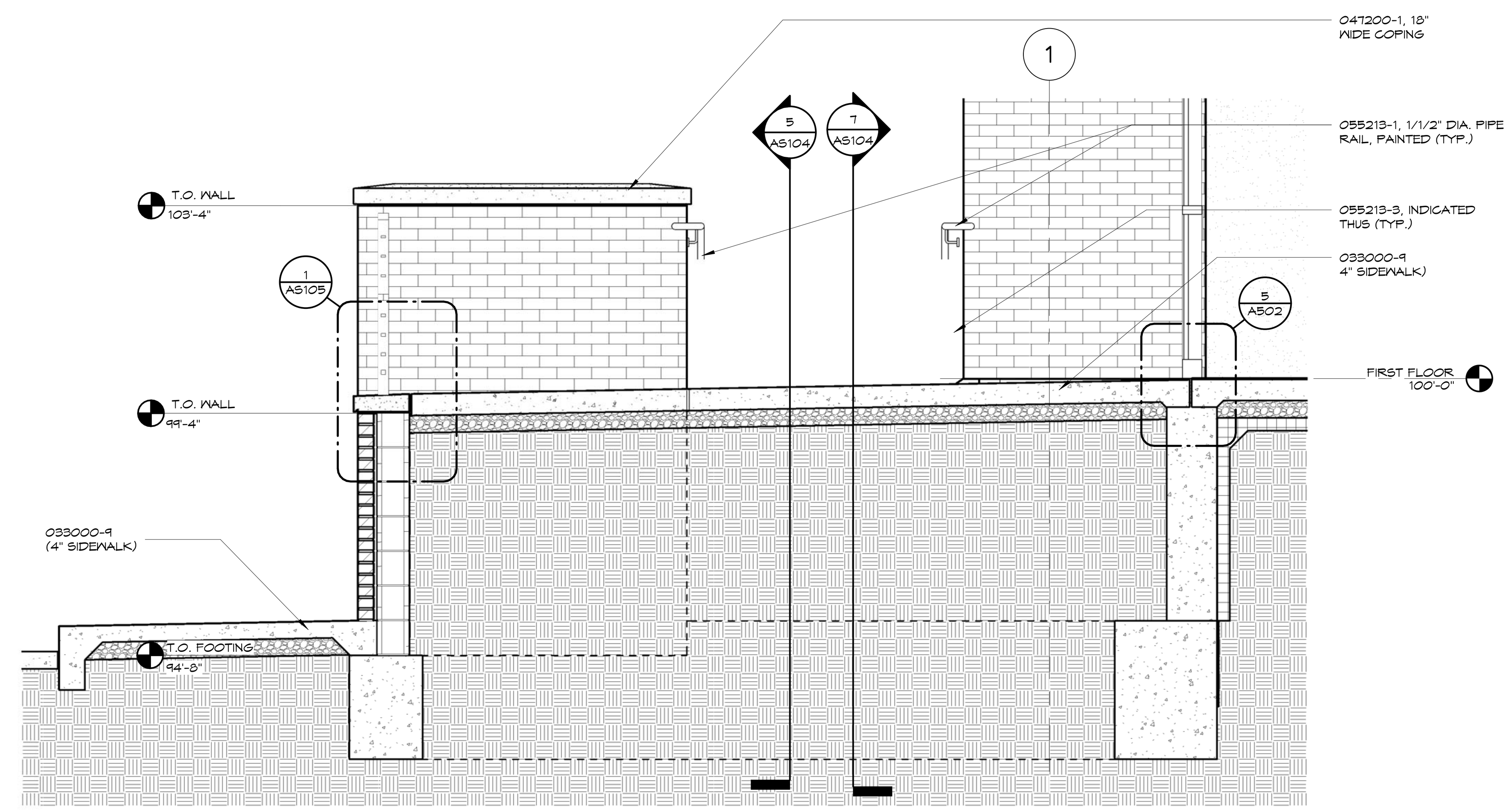

7 EXTERIOR SECTION AT TOP OF STAIR/RAMP
1/2" = 1'-0"

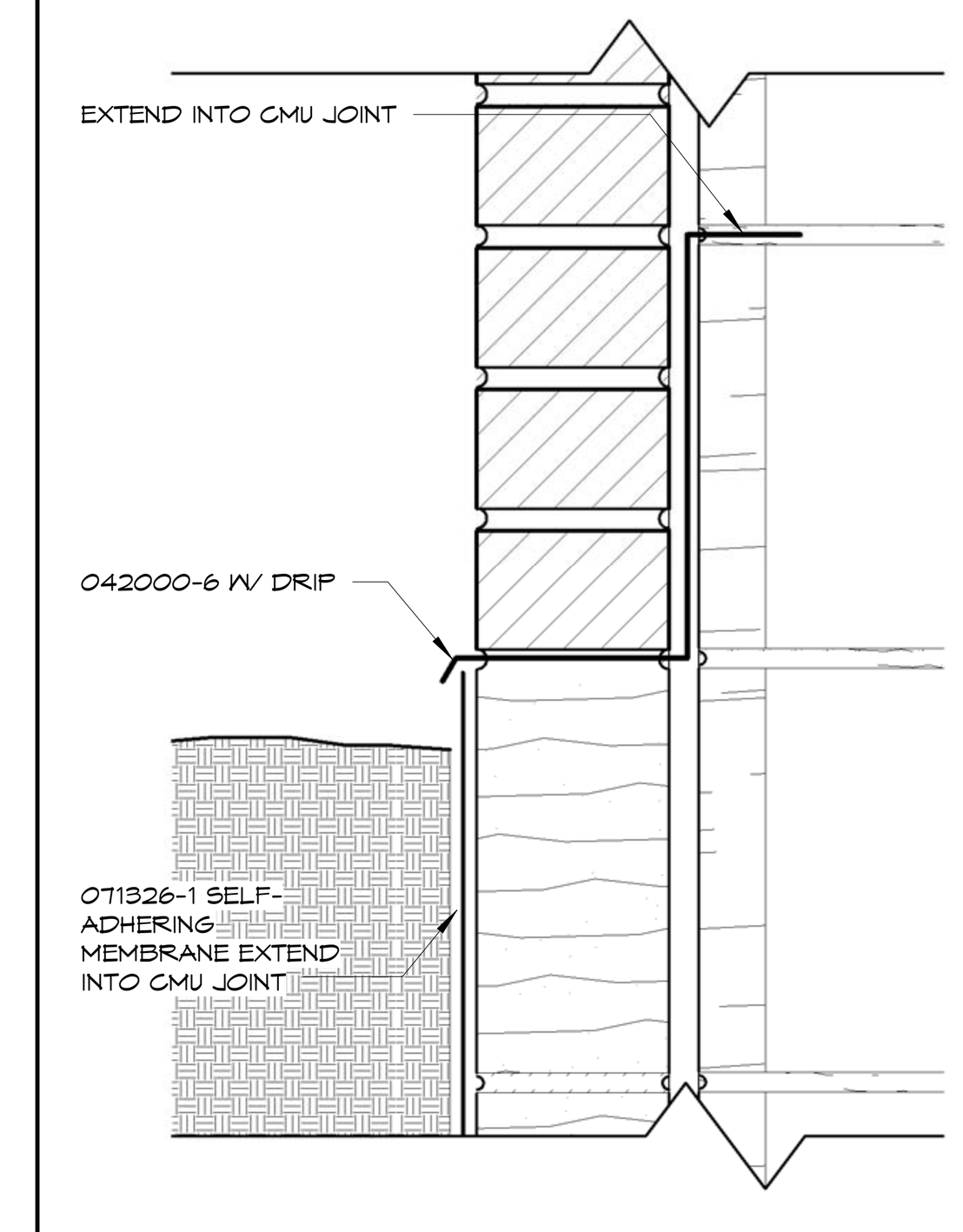

8 FLASHING DETAIL
3" = 1'-0"

KEYNOTES

Note: Keynotes are drawn from a master list & may not be sequentially numbered. Sizes (Ex: 2x4) or other info. following keynote on drawings indicates criteria for those materials/locations which may differ from std. material specified.

033000	-1	Concrete Structure
	-2	Concrete Floor Slab
	-3	Vapor Barrier
	-4	Welded Wire Fabric
	-5	Steel Reinforcing Bar
	-6	Rustication Joint
	-7	Waterstop
	-8	Dovetail Anchor
	-9	Sidewalk
	-10	Premolded Joint Filler
035300	-1	Concrete Topping
042000	-1	Face Brick
	-2	Concrete Masonry Unit - Normal Weight (")
	-3	Concrete Masonry Unit - Lightweight (")
	-4	Wire Reinforcing
	-5	Metal Tie/Anchor
	-6	Through Wall Flashing
	-7	Control Joint Strip
	-8	Bond Beam (")
	-9	Compressible Filler
	-10	Weep Hole
	-11	Cavity Drainage Material
	-12	Termination Bar
044300	-1	Stone Masonry
	-2	Anchor
	-3	Stone Jamb
	-4	Stone Sill
	-5	Belt Course
047200	-1	Cast Stone
051200	-1	Steel Beams
	-2	Steel Column
	-3	Steel Tube
	-4	Steel Channel
052100	-1	Steel Joist
	-2	Joist - Extended End
	-3	Joist - Ceiling Extension
053100	-1	Metal Decking
	-3	Steel Composite Decking
	-2	Flexible Closure Strips
054000	-1	Structural Steel Studs
	-2	Structural Steel Joists
	-3	"C" Closure
055000	-1	Steel Angle
	-4	Steel Channel
	-5	Steel Lintel
	-6	Steel Pipe
	-7	Steel Tube
	-8	Steel Plate
	-9	Steel Ladder
	-10	Steel Bollard
055100	-1	Steel Stairs
	-2	Steel Stair Stringer
	-3	Steel Embed Plate
055213	-1	Steel Pipe Handrail
	-2	Steel Pipe Rail/Post
	-3	Steel Handrail Wall Bracket
	-4	Steel Rod
055300	-1	Steel Grating
	-2	Steel Frame
057300	-1	Decorative Metal Railings
057500	-1	Ornamental Metal Stamped Grille
061053	-1	2x Wood Nailer (")
	-2	2x Wood Blocking (")
	-3	1x Wood Continuous (")
	-4	Plywood (")
	-5	#30 Felt
	-6	#15 Felt
	-7	Sheathing (")
064116	-1	Interior Architectural Woodwork
	-2	High Pressure Laminate
	-3	Cabinet Liner Laminate
	-4	Particle Board
	-5	Plywood
	-6	3mm Edge Molding
	-7	Solid Wood Blocking
	-8	Hardwood
	-9	Steel Tube/Leg Frame
	-10	Door Hinge
	-11	Door/Drawer Pull
	-12	Magnetic Catch
	-13	Drawer
	-14	Shelf Supports
	-15	Countertop
	-16	Solid-Surfacing Material
071113	-1	Bituminous Dampproofing
071326	-1	Self-Adhering Sheet Waterproofing
072100	-1	Foundation Wall or Under Slab Insulation (R-)
	-2	Cavity Wall Insulation (R-)
	-3	Building Insulation - Unfaced (R-)
	-4	Building Insulation - Faced (R-)
	-5	Sill Sealer
	-6	Safing Insulation
072726	-1	Fluid Applied Membrane Air Barrier
	-2	Flashing Tape
074213	-1	Metal Wall Panel (Type 1)
	-2	Trim
	-3	Z-Furring (")
	-4	Metal Wall Panel (Type 2)
	-5	Metal Soffit Panel
075423	-1	Thermoplastic Polyolefin (TPO) Roofing
	-2	Roof Insulation Flat
	-3	Roof Insulation Tapered
	-4	Roof Expansion Joint
	-5	Coverboard
	-6	Walkway Protection Board
076200	-1	Sheet Metal Flashing and Counterflashing
	-2	Pre-Finished Roof Edge
	-3	Pre-Finished Coping
	-4	Sheet Metal Reglet
	-5	Sheet Metal Gutter
	-6	Sheet Metal Downspout
	-7	Sheet Metal Scupper
077129	-1	Roof Expansion Joint
077200	-1	Roof Hatch/Ladder
078413	-1	Penetration Firestopping
078443	-1	Joint Firestopping
079200	-1	Sealant - Rake where required
	-2	Joint Filler
	-3	Gasket
	-4	Backer Rod
079500	-1	Expansion Control

081113	-1	Steel Door
	-2	Steel Frame
	-3	Frame Anchor
	-4	Louver
	-5	Plaster Guard
	-6	FPR Door
081416	-1	Flush Wood Door
083113	-1	Access Door
	-2	Access Door Frame
	-3	Floor Access Door
083323	-1	Overhead Coiling Door
	-2	Coiling Counter Door
083613	-1	Sectional Overhead Door
	-2	Sectional Overhead Door Track
	-3	Weatherstripping
084113	-1	Aluminum Entrance Door
	-2	Aluminum Entrance Frame
	-3	Sunshade
	-4	Aluminum Subsill
084413	-1	Glazed Aluminum Curtain Wall
	-2	Threshold
	-3	Sunshade Louver
	-4	Aluminum Subsill
087100	-1	Track Hardware
088000	-1	Glazing (as scheduled)
088853	-1	Securtiy Glazing (as scheduled)
089119	-1	Louvers and Vents
092216	-1	Steel Stud (")
	-2	Steel Stud Runner (")
	-3	Furring Channel (")
092400	-1	Portland Cement Plastering
	-2	Metal Lath
	-3	Casing Bead
092900	-1	Gypsum Board (")
	-2	Fire Rated Gypsum Board (")
	-3	Cementitious Tile Backer Panel
	-4	Metal Suspension System
	-5	Acoustical Sealant
	-6	Acoustical Insulation (")
	-7	Metal Edge Trim
	-8	Auxiliary Support Framing
	-9	Metal Control Joint
	-10	High Impact Gypsum Board
	-11	Concrete Interior Finishing Compound
	-12	Stiffener
093000	-1	Porcelain Wall Tile (" x ")
	-2	Shower Pan
	-3	Shower Pan Flashing
	-4	Porcelain Floor Tile (" x ")
	-5	Tile Base
	-6	Tile Cap
	-7	Setting Bed
	-8	Uncoupling water-proof membrane
	-9	Shower Splashguard
	-10	Shower Niche
095113	-1	Acoustical Panel ('x ') (F = Fire Rated)
	-2	Ceiling Suspension System
	-3	Edge Mold Trim
	-4	Auxiliary Support Framing
096513	-1	Resilient Tile Flooring
	-2	Resilient Wall Base
	-3	Edge Strip
	-4	Tactile Warning Surface
	-5	Resilient Stair Tread
	-6	Resilient Stair Riser
	-7	Resilient Stringer Skirt
	-8	Resilient STair Nose
096813	-1	Carpet Tile
096900	-1	Access Flooring
099113	-1	Exterior Painting
099123	-1	Interior Painting
099635	-1	Secondary Containment Coating System
101400	-1	Signage
102113	-1	Toilet Partition
	-2	Urinal Screen
102213	-1	Wire Mesh Partitions
102600	-1	Impact-Resistant Cornerguard
102800	-1	Tissue Dispenser
	-2	Framed Mirror
	-3	Sanitary Napkin Disposer
	-4	Grab Bar
	-5	Shower Seat
	-6	Shower Curtain Rod
	-7	Coat/Robe Hook
	-8	Shower Curtain
104413	-1	Fire Extinguisher Cabinet
104416	-1	Fire Extinguisher
105113	-1	Personnel Locker
	-2	Locker
	-3	Bench
105300	-1	Pre- Manufactured Canopies
107500	-1	Flagpole
108113	-1	Deterrent Spikes
122413	-1	Roller Window Shades
133600	-1	Spray Painting Booth
142400	-1	Hydraulic Elevator
311000	-1	Site Clearing
312000	-1	Earth Moving
	-2	Interior Fill
	-3	Exterior Fill
	-4	Granular Drainage Course
	-5	Subbase Course
321313	-1	Concrete Paving
334600	-1	Perforated Wall Pipe & Fittings
	-2	Geotextile Filter Fabric (Flat/Sock)
	-3	Drainage Panel

NOTE: REFER TO STRUCTURAL DRAWINGS FOR REINFORCING STEEL IN EXTERIOR WALLS AND CONCRETE NOT SHOWN

NOTE: REFER TO ALL DETAILS (DETAILS LOCATED ON THIS SHEET, PRECEEDING SHEETS AND FOLLOWING SHEETS) FOR APPLICABLE NOTES NOT SHOWN

NOTE: REFER TO ALL SECTIONS (SECTIONS LOCATED ON THIS SHEET, PRECEEDING SHEETS AND FOLLOWING SHEETS) FOR APPLICABLE NOTES NOT SHOWN

HTK ARCHITECTS PA
900 S. KANSAS AVE., SUITE 200
TOPEKA KANSAS 66112
P 785.266.5373
9300 W 110TH ST. STE. 150
OVERLAND PARK, KANSAS 66210
P 913.663.5373
www.htkarchitects.com

R. KEITH BLACKBURN LICENSED 3435 4-15-15 KANSAS PROFESSIONAL ARCHITECT

DENNIS A. HAUGH LICENSED 4-15-15 2567 KANSAS PROFESSIONAL ARCHITECT

DATE:
- 4-15-15

REVISED DATE:
- 12-18-14
- 2-9-15
- 3-10-15
-

HTK PROJECT NUMBER:
- 1410.03

Department of Administration
Office of Facilities and Procurement Management
800 SW Jackson, Suite 700
Topeka, Kansas 66612-1216
Phone 785-296-8899
FAX 785-296-3456

STATE OF KANSAS
STATE OF KANSAS ENERGY & SERVICE CENTER
221 SW 7th Street
BUILDING NUMBER 17300-0038

DATE: 4-15-15 DRAWN BY: Author CHECKED BY: Checker REV:

ARCHITECTURAL SITE PLAN ELEVATIONS & DETAILS

A-012651

AS105

CONSTRUCTION DOCUMENTS

4/16/2015 11:12:50 AM C:\Users\jms\Documents\REVIT\State of Kansas Energy_Central_jms.rvt

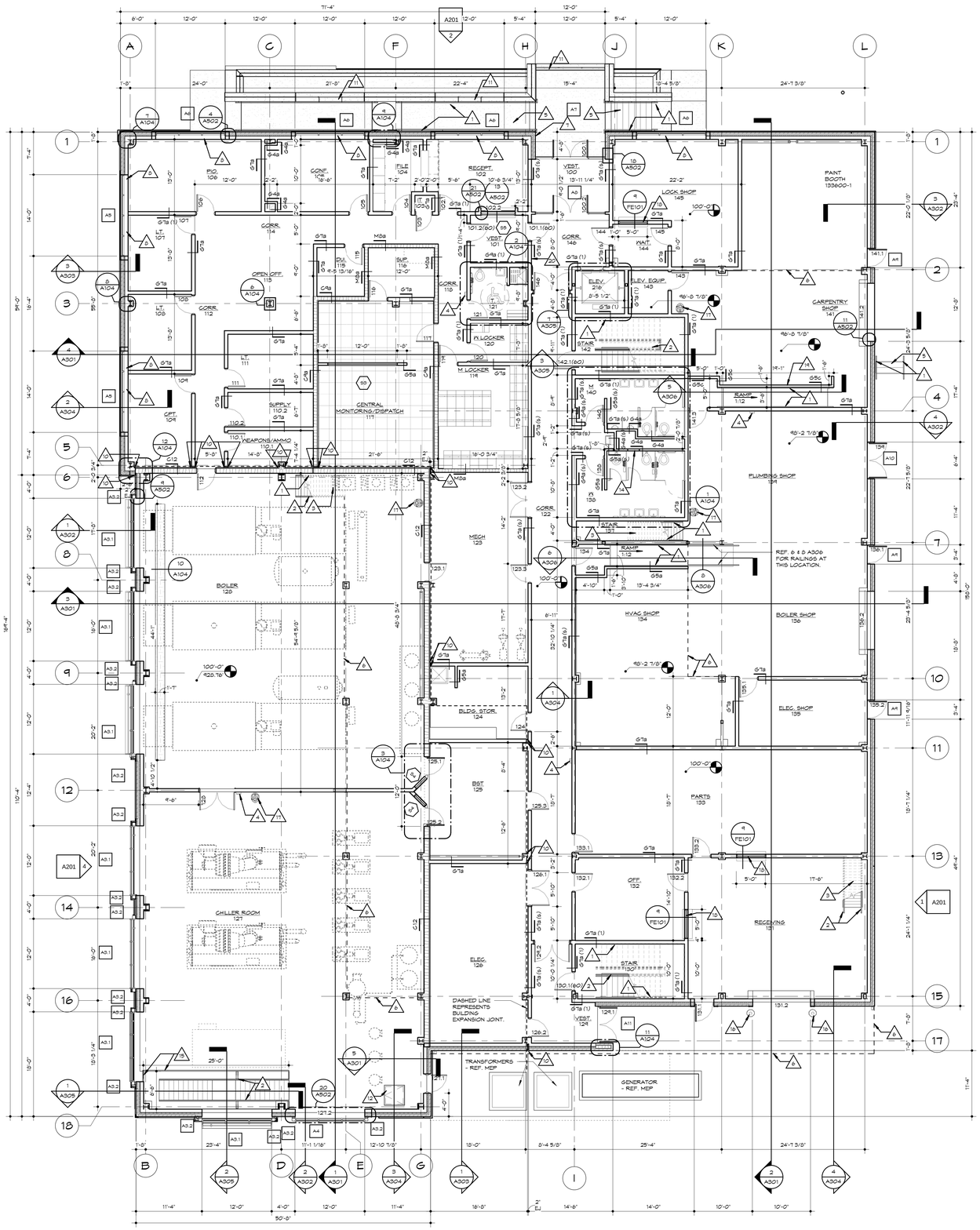

1 FIRST FLOOR
1/8" = 1'-0"

NORTH

ROOM FINISH SCHEDULE-FIRST FLOOR

ROOM MARK	ROOM NAME	FLOOR	BASE	WALLS NORTH (or TYP.)	WALLS EAST	WALLS SOUTH	WALLS WEST	CEILING	NOTES
100	VEST.	NOM	RB	LTX	LTX	LTX	LTX	TYPE 1	
101	VEST.	CPT	RB	LTX	LTX	LTX	LTX	TYPE 1	
102	RECEPT.	CPT	RB	LTX	LTX	LTX	LTX	TYPE 1	
103	IT	CPT	RB	LTX	LTX	LTX	LTX	TYPE 1	
104	FILE	CPT	RB	LTX	LTX	LTX	LTX	TYPE 1	
105	CONF.	CPT	RB	LTX	LTX	LTX	LTX	TYPE 1	
106	FIO.	CPT	RB	LTX	LTX	LTX	LTX	TYPE 1	
107	LT.	CPT	RB	LTX	LTX	LTX	LTX	TYPE 1	
108	LT.	CPT	RB	LTX	LTX	LTX	LTX	TYPE 1	
109	OPT.	CPT	RB	LTX	LTX	LTX	LTX	TYPE 1	
110.1	WEAPONS/AMMO	SC	RB	LTX	LTX	LTX	LTX	TYPE 1	
110.2	SUPPLY	SC	RB	LTX	LTX	LTX	LTX	TYPE 1	
111	LT.	CPT	RB	LTX	LTX	LTX	LTX	TYPE 1	
112	CORR.	CPT	RB	LTX	LTX	LTX	LTX	TYPE 1	
113	OPEN OFF.	CPT	RB	LTX	LTX	LTX	LTX	TYPE 1	
114	CORR.	CPT	RB	LTX	LTX	LTX	LTX	TYPE 1	
115	DUI.	CPT	RB	LTX	LTX	LTX	LTX	TYPE 1	
116	SUP.	CPT	RB	LTX	LTX	LTX	LTX	TYPE 1	
117	CENTRAL MONITORING/DISPATCH	CPT AC	RB	LTX	LTX	LTX	LTX	STR.	1
118	CORR.	CPT	RB	LTX	LTX	LTX	LTX	TYPE 1	
119	M LOCKER	PT	RB	EPX	EPX	EPX	EPX	TYPE 1	
120	W LOCKER	PT	RB	EPX	EPX	EPX	EPX	TYPE 1	
121	T.	PT	PT	EPX,PWT	EPX,PWT	EPX,PWT	EPX,PWT	TYPE 1/EPX	
122	CORR.	SC	RB	LTX	LTX	LTX	LTX	STR./TYPE 1 /LAY.	
123	MECH	SC	RB	LTX	LTX	LTX	LTX	STR.	
124	BLDG. STOR.	SC	RB	LTX	LTX	LTX	LTX	STR.	
125	BST	SC	RB	LTX	LTX	LTX	LTX	TYPE 1	
126	ELEC.	SC	RB	LTX	LTX	LTX	LTX	STR.	
127	CHILLER ROOM	SC	RB	EPX	EPX	EPX	EPX	STR.	
128	BOILER	SC	RB	EPX	EPX	EPX	EPX	STR.	
129	VEST.	NOM	RB	LTX	LTX	LTX	LTX	TYPE 1	
130	STAIR	VCT, RTR	RB	LTX	LTX	LTX	LTX	TYPE 1	
131	RECEIVING	SC	RB	LTX	LTX	LTX	LTX	STR.	
132	OFF.	CPT	RB	LTX	LTX	LTX	LTX	TYPE 1	
133	PARTS	SC	RB	LTX	LTX	LTX	LTX	STR.	
134	HVAC SHOP	SC	RB	LTX	LTX	LTX	LTX	STR.	
135	ELEC. SHOP	SC	RB	LTX	LTX	LTX	LTX	STR.	
136	BOILER SHOP	SC	RB	LTX	LTX	LTX	LTX	STR.	
137	STAIR	VCT, RTR	RB	LTX	LTX	LTX	LTX	STR.	
138	W	PT	PT	EPX	EPX	EPX	EPX	TYPE 1	
139	PLUMBING SHOP	SC	RB	LTX	LTX	LTX	LTX	STR.	
140	M	PT	PT	EPX	EPX	EPX	EPX	TYPE 1	
141	CARPENTRY SHOP	SC	RB	LTX	LTX	LTX	LTX	STR.	
142	STAIR	VCT, RTR	RB	LTX	LTX	LTX	LTX	STR.	
143	ELEV. EQUIP.	SC	RB	LTX	LTX	LTX	LTX	STR.	
144	WAIT.	VCT	RB	LTX	LTX	LTX	LTX	TYPE 1	
145	LOCK SHOP	VCT	RB	LTX	LTX	LTX	LTX	TYPE 1	
146	CORR.	SC	RB	LTX	LTX	LTX	LTX	STR.	

ARCHITECTURAL PLAN NOTES

GENERAL: COORDINATE WITH WORK SHOWN ON STRUCTURAL, MECHANICAL, PLUMBING, AND ELECTRICAL DRAWINGS, REF. FE SHEET FOR EQUIP. COORDINATION

1. HANDRAIL; REF. 9A306
2. RAILING; REF. 9A306
3. METAL SHIP LADDER
4. FIRE EXTINGUISHER CABINET; 104413-1
5. REF. CIVIL FOR LANDING, STAIR, & RAMP (N.O.)
6. LINE OF SOFFIT, ROOF OVERHANG, OR FLOOR ABOVE.
7. KNOX BOX LOCATION.
8. ROLLER SHADES 122413-1
9. ROOF HATCH/LADDER; REF 18A309. COORDINATE EXACT LOCATION WITH JOISTS AND MEP EQUIPMENT.
10. 2" BUILDING EXPANSION JOINT. PROVIDE WALL, CEILING, AND/OR FLOOR EXPANSION JOINT COVER N.O. PROVIDE THRESHOLD AT DOORS. EXPANSION JOINT REPRESENTED BY DASHED LINE.
11. DECORATIVE RAILING; REF. 4A306.
12. FLOOR ACCESS HATCH. 083113-3
13. WIRE MESH PARTITION BRACE AT STRUCTURE ABOVE. 10'-0" HIGH MIN. INTEGRAL DOOR N.O.
14. PROVIDE 24" X 24" ACCESS PANEL.
15. GATE; REF. 11A306. RAILING IS SIMILAR.
16. BOLLARD REF. 10A5101.
17. EYE WASH STATION. REF. MEP
18. TRANSACTION WINDOW, 3'-6" HIGH. REF. PLAN FOR WIDTH. GLASS TO BE 1/4" TEMPERED.
19. 8'-0" HIGH WALL WITH DTJR00-12 48" O.C.
20. DIRECTORY

ROOM FINISH SCHEDULE LEGEND

FLOOR
- SC SEALED CONCRETE
- VCT VINYL COMPOSITION TILE
- PT PORCELAIN TILE
- CPT CARPET
- RTR RUBBER TREADS AND RISERS
- NOM WALK-OFF MAT
- AF ACCESS FLOOR

WALL BASE
- RB RESILIENT BASE (4" HIGH)
- PT PORCELAIN TILE (6" HIGH)

WALLS
- LTX PAINT
- EPX EPOXY PAINT
- PWT PORCELAIN WALL TILE

CEILING
- STR PAINT EXPOSED STRUCTURE
- LAY LATEX ENAMEL PAINT ON GYPSUM SOFFITS
- TYPE 1 SUSPENDED 2 X 2 ACOUSTIC LAY-IN PANEL

ROOM FINISH SCHEDULE NOTES

1. CARPET TILE SHALL INTEGRATE WITH ACCESS FLOORING.

HTK ARCHITECTS PA
9300 W 110TH ST. STE. 150
OVERLAND PARK, KANSAS 66210
P 913.663.3373
F 913.663.3379
900 S. KANSAS AVE., SUITE 200
TOPEKA KANSAS 66612
P 785.266.3373
www.htkarchitects.com

DANIEL R. BLACKBURN — LICENSED ARCHITECT — 13435 — 4-15-15 — KANSAS — PROFESSIONAL ARCHITECT

DENNIS A. HATCH — LICENSED ARCHITECT — 4-15-15 — 25621 — KANSAS — PROFESSIONAL ARCHITECT

DATE:
- 4-15-15

REVISED DATE:
- 12.18.14
- 2.9.15
- 3-10-15

HTK PROJECT NUMBER:
- 1410.03

Department of Administration
Office of Facilities and
Procurement Management
800 SW Jackson, Suite 700
Topeka, Kansas 66612-1216
Phone 785-296-8899
FAX 785-296-3456

STATE OF KANSAS
STATE OF KANSAS ENERGY & SERVICE CENTER
221 SW 7th Street
BUILDING NUMBER 17300-0038

DATE: 4-15-15 DRAWN BY: CHECKED BY: REV:

FIRST FLOOR

A-012651

A101

CONSTRUCTION DOCUMENTS

4/16/2015 11:07:53 AM C:\Users\jms\Documents\REVIT\State of Kansas Energy_Central_jms.rvt

JCSBC
2-2-2016
Att.9G.--0028

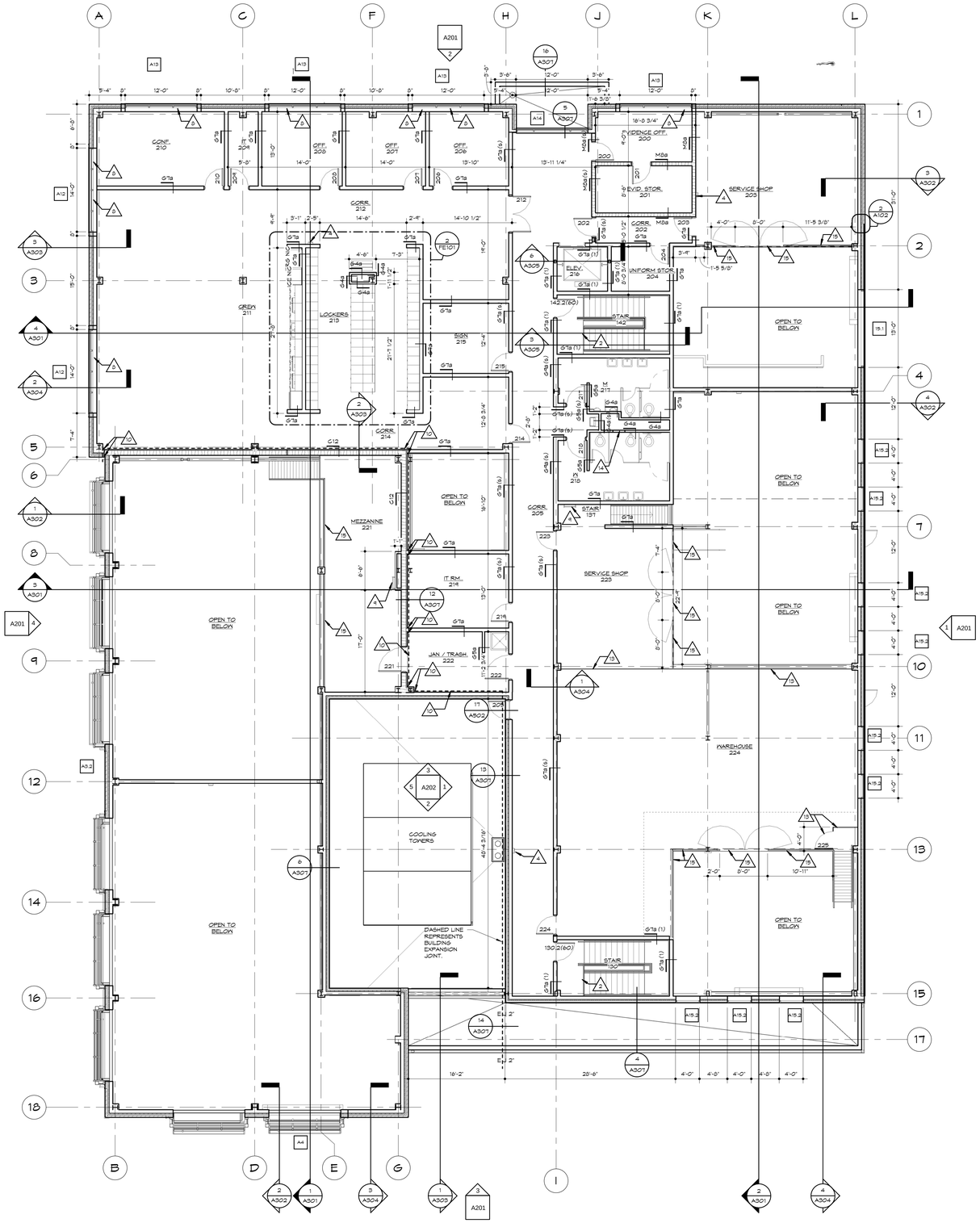

1 SECOND FLOOR

1/8" = 1'-0"

NORTH

ROOM FINISH SCHEDULE-SECOND FLOOR

ROOM MARK	ROOM NAME	FLOOR	BASE	WALLS NORTH (or TYP)	WALLS EAST	WALLS SOUTH	WALLS WEST	CEILING	NOTES
200	EVIDENCE OFF.	VCT	RB	LTX	LTX	LTX	LTX	TYPE 1	
201	EVID. STOR.	VCT	RB	LTX	LTX	LTX	LTX	TYPE 1	
202	CORR.	VCT	RB	LTX	LTX	LTX	LTX	TYPE 1	
203	SERVICE SHOP	SC	RB	LTX	LTX	LTX	LTX	STR	
204	UNIFORM STOR.	VCT	RB	LTX	LTX	LTX	LTX	STR	
205	CORR.	VCT	RB	LTX	LTX	LTX	LTX	STR/TYPE 1/LAX	
206	OFF.	SC	RB	LTX	LTX	LTX	LTX	TYPE 1	
207	OFF.	CPT	RB	LTX	LTX	LTX	LTX	TYPE 1	
208	OFF.	CPT	RB	LTX	LTX	LTX	LTX	TYPE 1	
209	IT	VCT	RB	LTX	LTX	LTX	LTX	TYPE 1	
210	GDNF.	CPT	RB	LTX	LTX	LTX	LTX	TYPE 1	
211	CREW	VCT	RB	LTX	LTX	LTX	LTX	TYPE 1	
212	CORR.	VCT	RB	LTX	LTX	LTX	LTX	TYPE 1	
213	LOCKERS	VCT	RB	LTX	LTX	LTX	LTX	TYPE 1	
214	CORR.	VCT	RB	LTX	LTX	LTX	LTX	TYPE 1	
215	SIGN	SC	RB	LTX	LTX	LTX	LTX	TYPE 1	
216	ELEV.	CPT	C	C	C	C	C	C	
217	M	PT	PT	EPX	EPX	EPX	EPX	TYPE 1	
218	W	PT	PT	EPX	EPX	EPX	EPX	TYPE 1	
219	IT RM.	SC	RB	LTX	LTX	LTX	LTX	TYPE 1	
221	MEZZANINE	SC	RB	LTX	LTX	LTX	LTX	STR	
222	JAN / TRASH.	SC	RB	LTX	LTX	LTX	LTX	STR	
223	SERVICE SHOP	SC	RB	LTX	LTX	LTX	LTX	STR	
224	WAREHOUSE	SC	RB	LTX	LTX	LTX	LTX	STR	

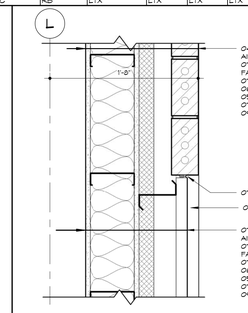

2 VERTICAL JONT AT BRICK AND METAL PANEL

1 1/2" = 1'-0"

ARCHITECTURAL PLAN NOTES

GENERAL - COORDINATE WITH WORK SHOWN ON STRUCTURAL, MECHANICAL, PLUMBING, AND ELECTRICAL DRAWINGS, REF. FE SHEET FOR EQUIP. COORDINATION

1. HANDRAIL, REF. 9A306
2. RAILING, REF. 5A306
3. METAL SHIP LADDER
4. FIRE EXTINGUISHER CABINET; 104413-1
5. REF. CIVIL FOR LANDING, STAIR, & RAMP (N.I.C.)
6. LINE OF SOFFIT, ROOF OVERHANG, OR FLOOR ABOVE.
7. KNOX BOX LOCATION.
8. ROLLER SHADES 122413-1
9. ROOF HATCH/LADDER; REF 16A306. COORDINATE EXACT LOCATION WITH JOISTS AND MEP EQUIPMENT.
10. 2" BUILDING EXPANSION JOINT. PROVIDE WALL CEILING, AND/OR FLOOR EXPANSION JOINT COVER M.O. PROVIDE THRESHOLD AT DOORS. EXPANSION JOINT REPRESENTED BY DASHED LINE.
11. DECORATIVE RAILING, REF. 4A306.
12. FLOOR ACCESS HATCH. 055113-3
13. WIRE MESH PARTITION BRACE AT STRUCTURE ABOVE. 10'-0" HIGH MIN. INTEGRAL DOOR M.O.
14. PROVIDE 24" X 24" ACCESS PANEL.
15. GATE, REF. 11A306. RAILING IS SIMILAR.
16. BOLLARD REF. 10A5101.
17. EYE WASH STATION, REF. MEP
18. TRANSACTION WINDOW, 3'-6" HIGH, REF. PLAN FOR WIDTH. GLASS TO BE 1/4" TEMPERED.
19. 8'-0" HIGH WALL WITH G42900-12 48" O.C.
20. DIRECTORY

ROOM FINISH SCHEDULE LEGEND

FLOOR
- SC SEALED CONCRETE
- VCT VINYL COMPOSITION TILE
- PT PORCELAIN TILE
- CPT CARPET
- RTR RUBBER TREADS AND RISERS
- MDM WALK-OFF MAT
- AF ACCESS FLOOR

WALL BASE
- RB RESILIENT BASE (4" HIGH)
- PT PORCELAN TILE (6" HIGH)

WALLS
- LTX PAINT
- EPX EPOXY PAINT
- PAT PORCELAN WALL TILE

CEILING
- STR PAINT EXPOSED STRUCTURE
- LAX LATEX ENAMEL PAINT ON GYPSUM SOFFITS
- TYPE 1 SUSPENDED 2 x 2 ACOUSTIC LAY-IN PANEL

ROOM FINISH SCHEDULE NOTES

1. CARPET TILE SHALL INTEGRATE WITH ACCESS FLOORING.

NOTE: REFER TO STRUCTURAL DRAWINGS FOR REINFORCING STEEL IN EXTERIOR WALLS AND CONCRETE NOT SHOWN

NOTE: REFER TO ALL DETAILS (DETAILS LOCATED ON THIS SHEET, PRECEEDING SHEETS AND FOLLOWING SHEETS) FOR APPLICABLE NOTES NOT SHOWN

NOTE: REFER TO ALL SECTIONS (SECTIONS LOCATED ON THIS SHEET, PRECEEDING SHEETS AND FOLLOWING SHEETS) FOR APPLICABLE NOTES NOT SHOWN

HTK ARCHITECTS PA
9300 W 110TH ST. STE. 150
OVERLAND PARK, KANSAS 66210
P 913.663.3373
www.htkarchitects.com
900 S. KANSAS AVE., SUITE 200
TOPEKA KANSAS 66612
P 785.266.3373

RICHARD KENNETH BLACKBURN — LICENSED PROFESSIONAL ENGINEER — 13435 — 4-15-15 — KANSAS — PROFESSIONAL ENGINEER

DENNIS A. HATCH — LICENSED PROFESSIONAL ENGINEER — 4-15-15 — 25672 — KANSAS — PROFESSIONAL ENGINEER

DATE:
- 4-15-15

REVISED DATE:
- 12-18-14
- 2-9-15
- 3-10-15

HTK PROJECT NUMBER:
- 1410.03

Department of Administration
Office of Facilities and
Procurement Management
800 SW Jackson, Suite 700
Topeka, Kansas 66612-1216
Phone 785-296-8899
FAX 785-296-3456

STATE OF KANSAS
STATE OF KANSAS ENERGY & SERVICE CENTER
221 SW 7th Street
BUILDING NUMBER 17300-0038

DATE: 4-15-15 DRAWN BY: Author CHECKED BY: Checker REV:

SECOND FLOOR

A-012651

A102

CONSTRUCTION DOCUMENTS

4/16/2015 11:08:06 AM C:\Users\jms\Documents\REVIT\State of Kansas Energy_Central_jms.rvt

JCSBC
2-2-2016
Att.9G.--0029

ARCHITECTS PA
HTK
900 S. KANSAS AVE., SUITE 200 TOPEKA KANSAS 66612 P 785.266.5373
9300 W 110TH ST. STE. 150 OVERLAND PARK, KANSAS 66210 P 913.663.5373
www.htkarchitects.com

DATE: ● 4-15-15

REVISED DATE: ● 12.18.14 ●● 2.9.15 ●●● 3.10.15

HTK PROJECT NUMBER: ● 1410.03

Department of Administration
Office of Facilities and
Procurement Management
800 SW Jackson, Suite 700
Topeka, Kansas 66612-1216
Phone 785-296-8899
FAX 785-296-3456

STATE OF KANSAS
STATE OF KANSAS ENERGY & SERVICE CENTER

221 SW 7th Street

BUILDING NUMBER 1730.0038

DATE: 4-15-15 DRAWN BY: Author CHECKED BY: Checker REV:

CLERESTORY PLAN

A012651

A103

CONSTRUCTION DOCUMENTS

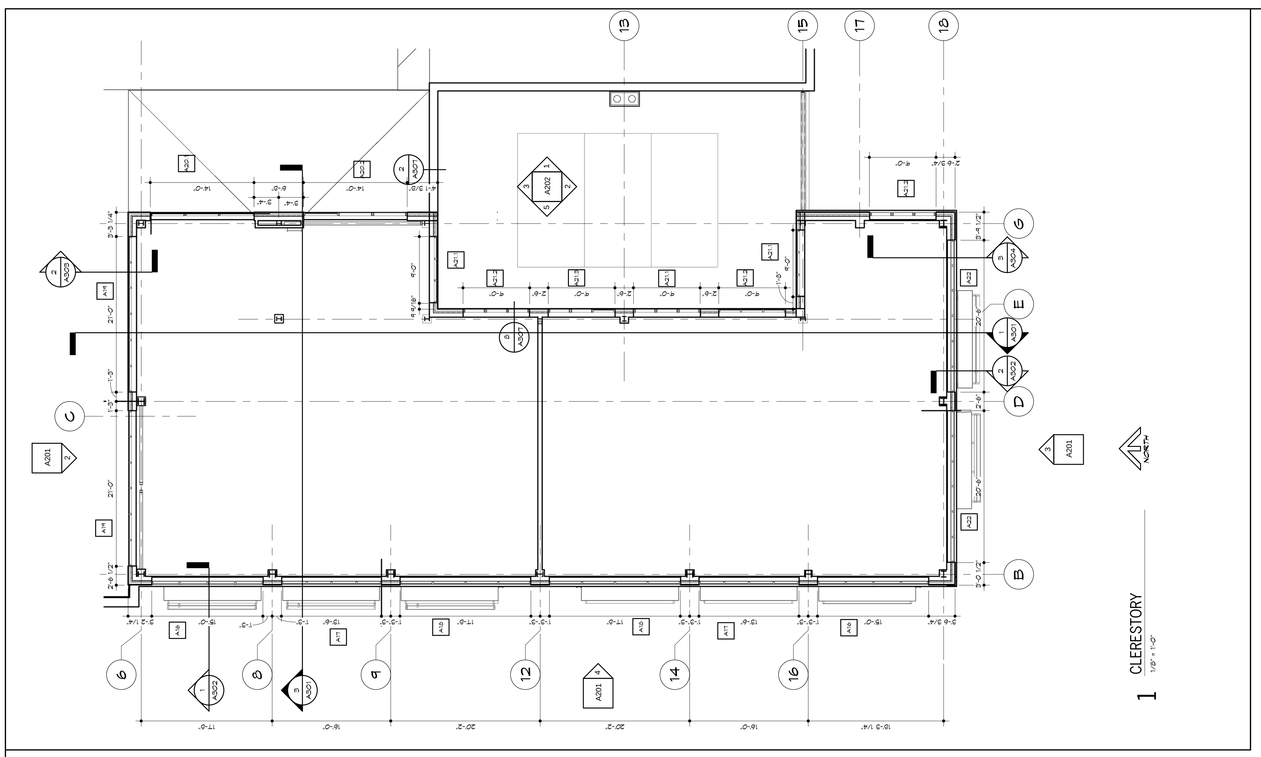

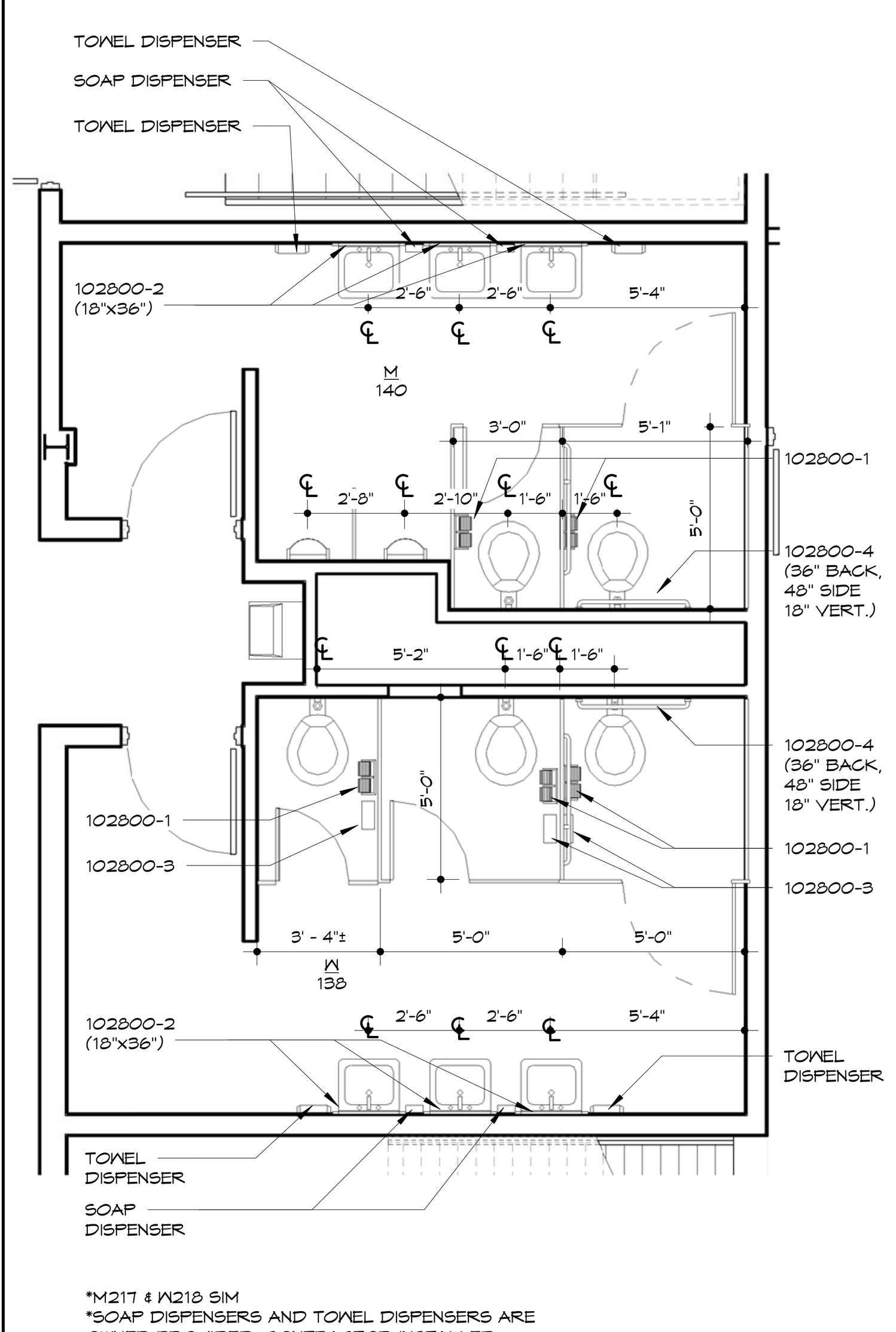

1 ENLARGED RESTROOMS
1/4" = 1'-0"

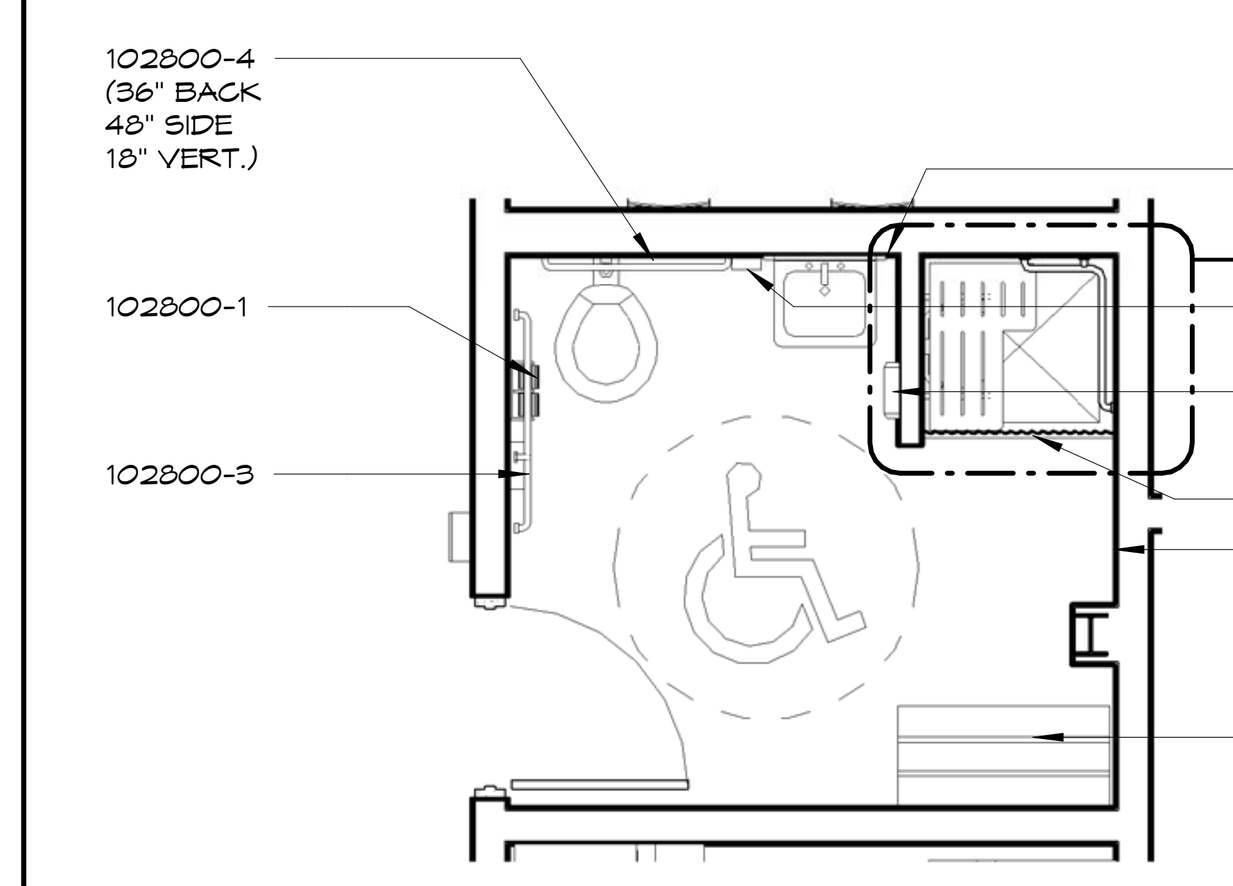

2 T. 121
1/4" = 1'-0"

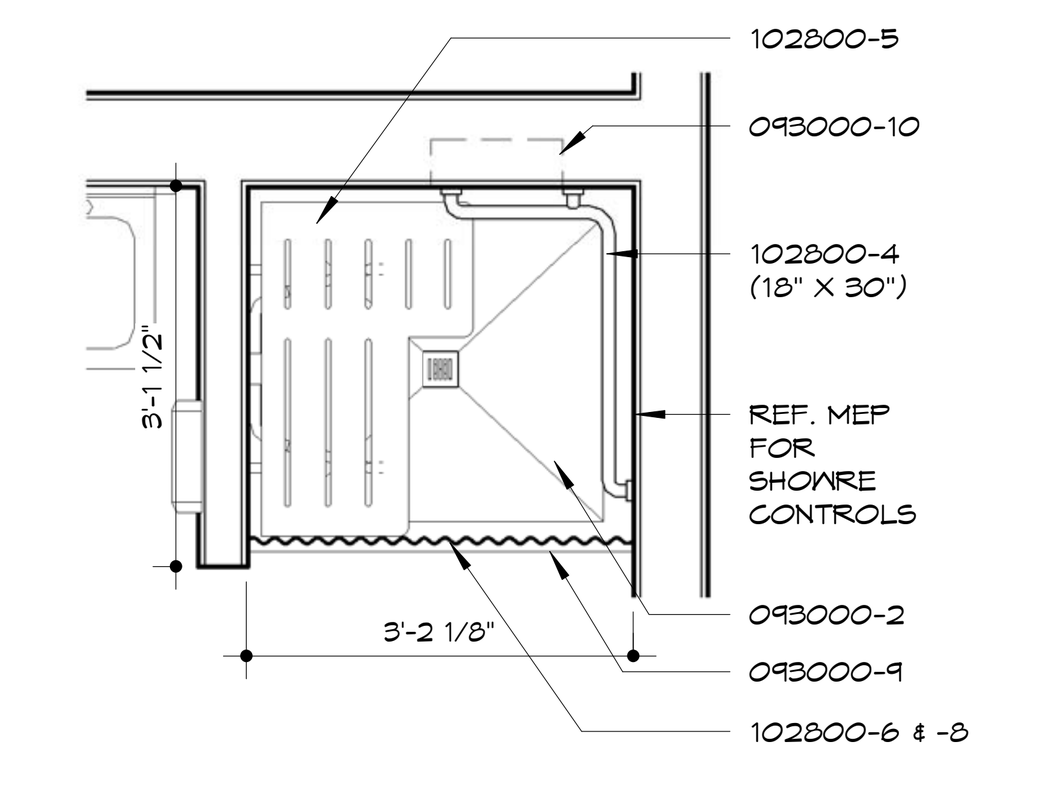

13 ADA SHOWER
1/2" = 1'-0"

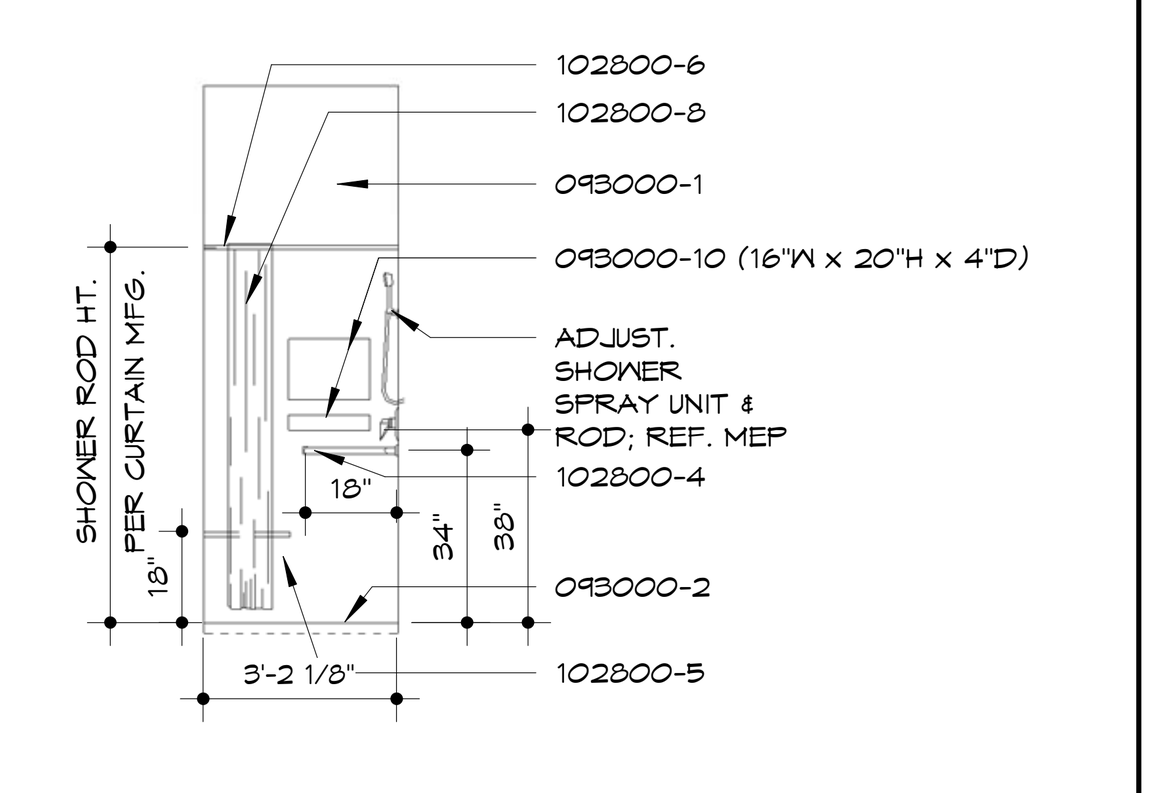

14 SHOWER ENTRY VIEW
1/4" = 1'-0"

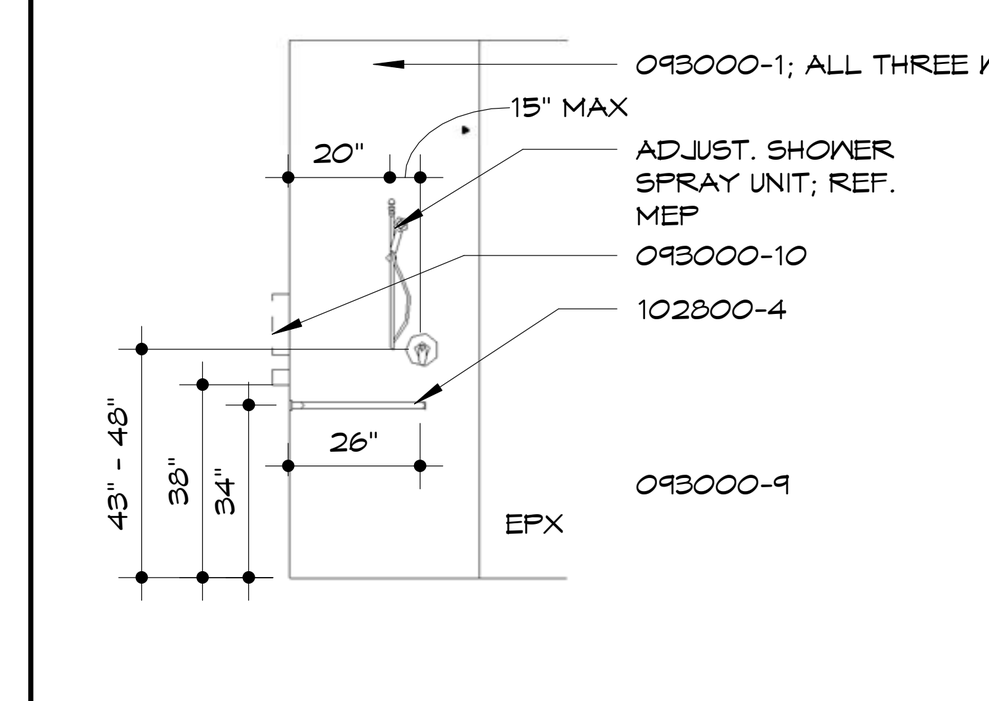

16 SHOWER CONTROL VIEW
1/4" = 1'-0"

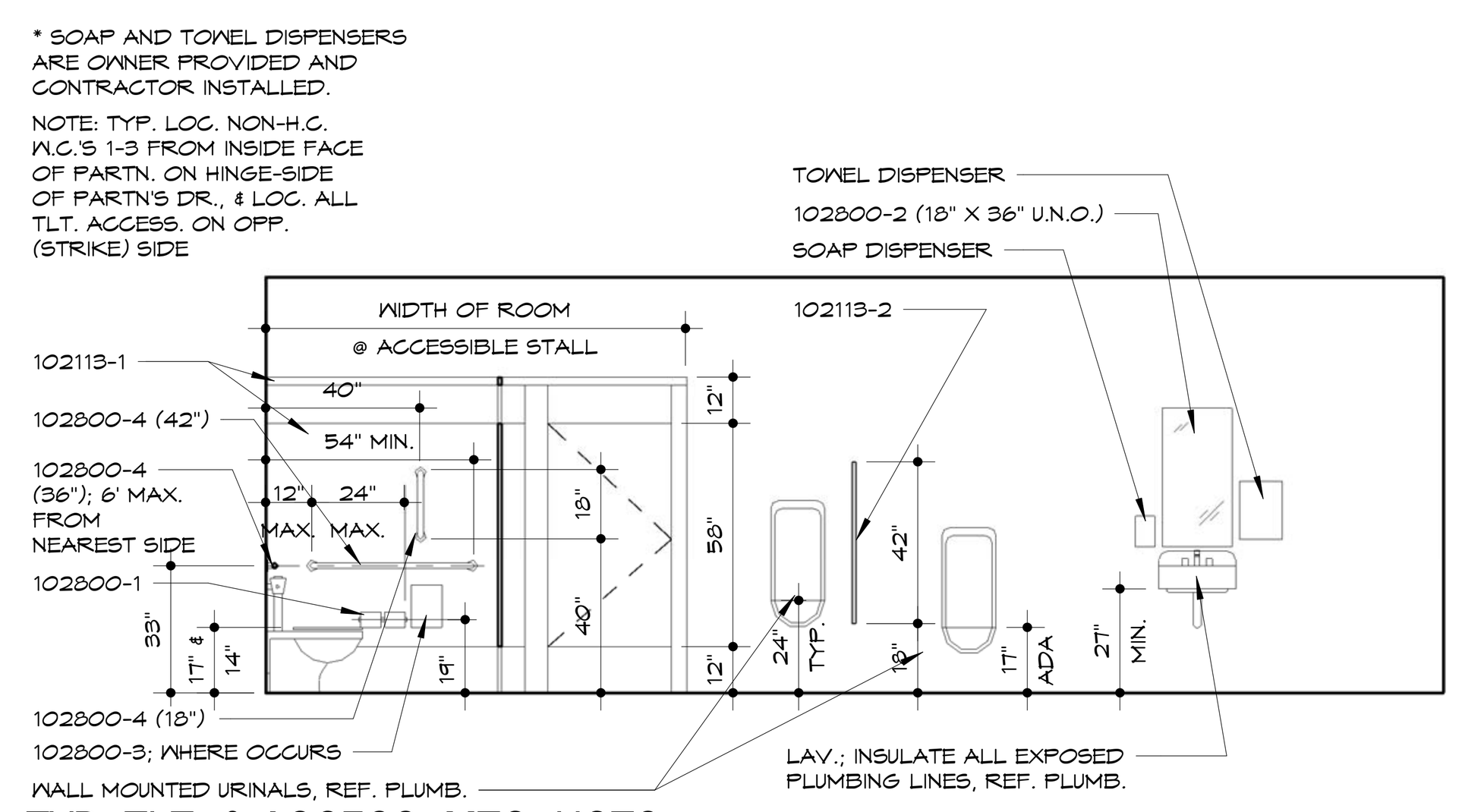

TYP. TLT. & ACCESS. MTG. HGTS.

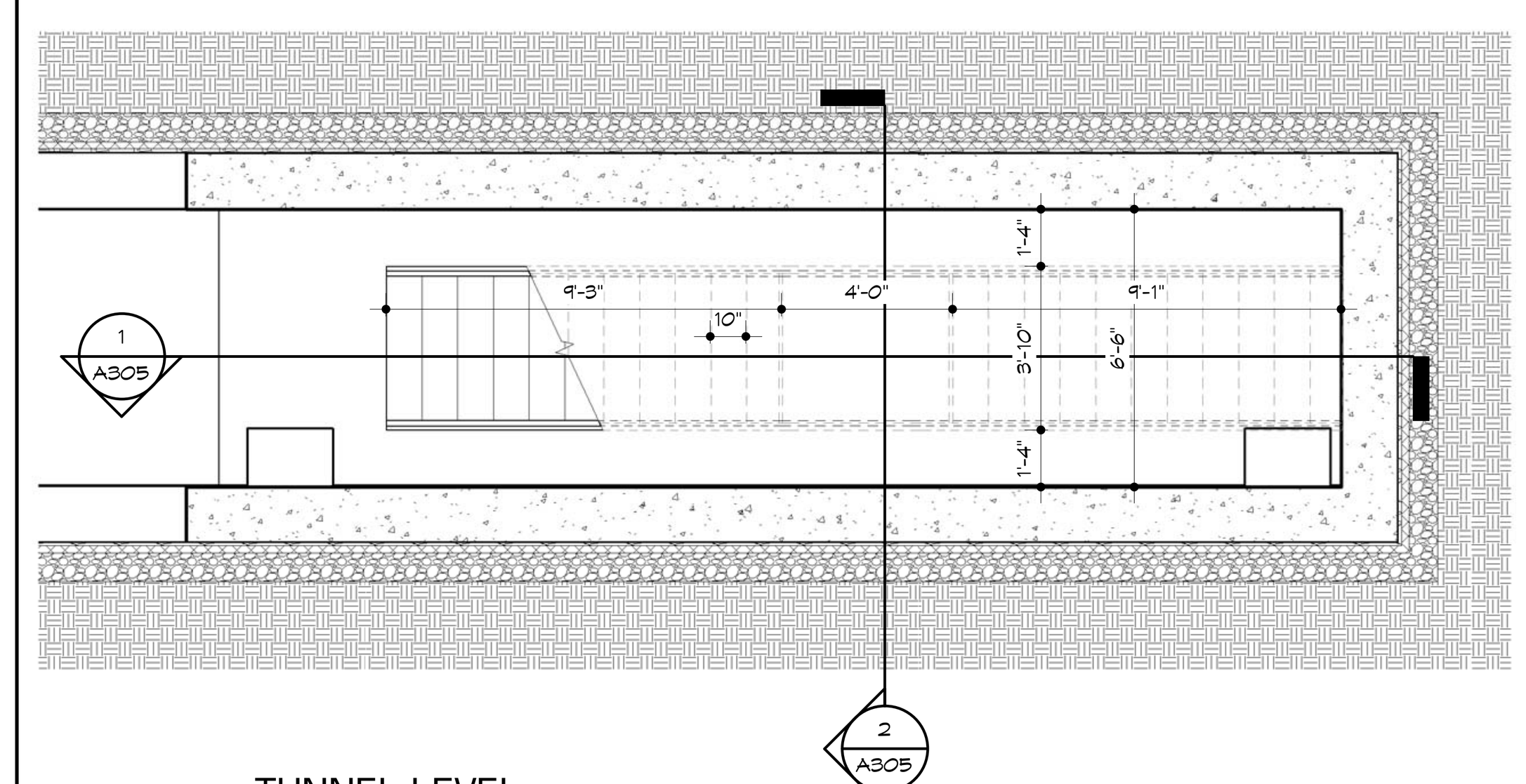

4 TUNNEL LEVEL
1/4" = 1'-0"

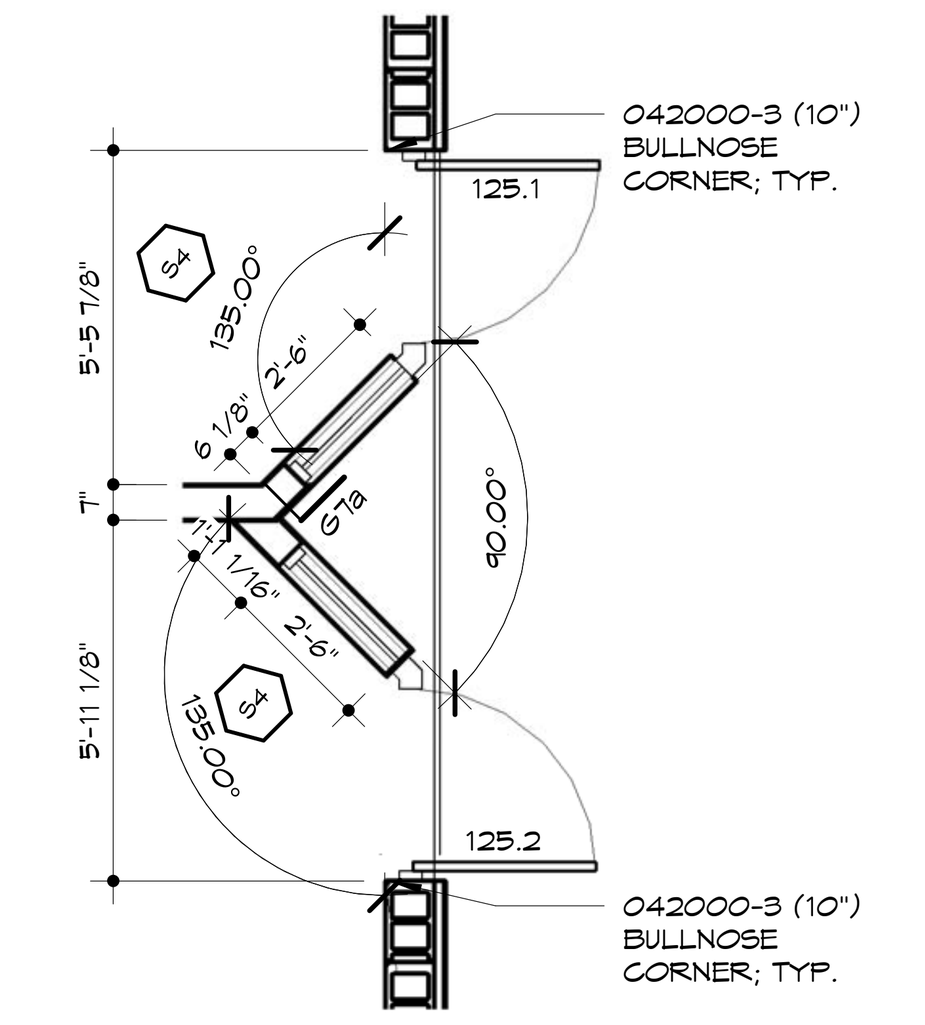

3 DOORS AT BST
1/4" = 1'-0"

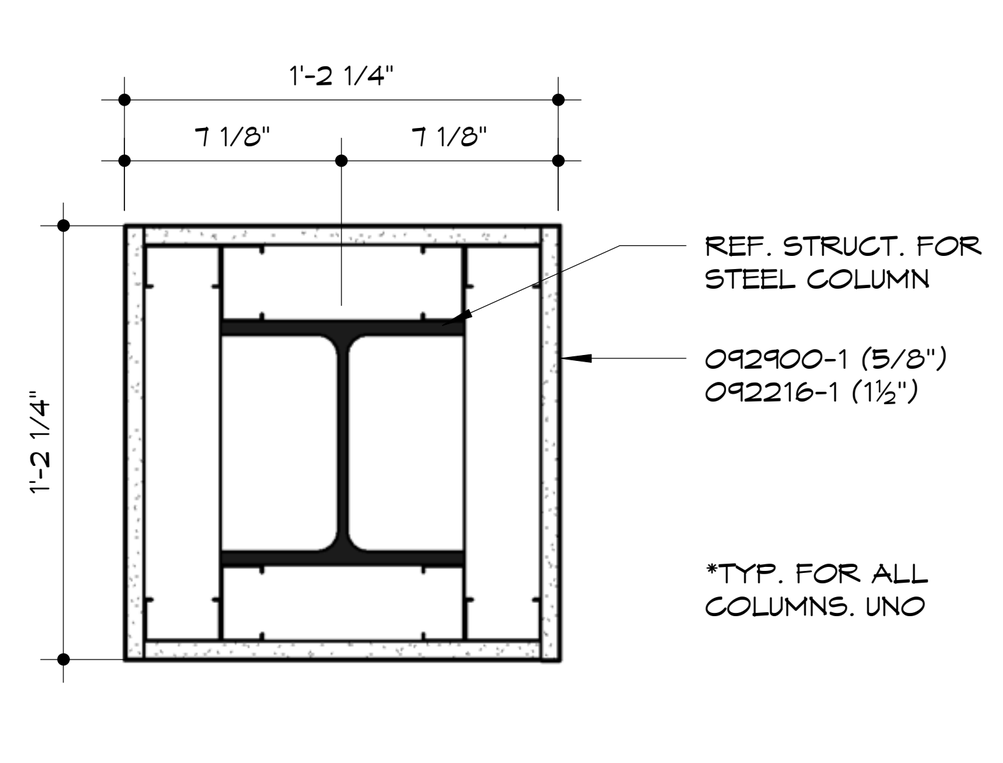

6 TYP. COLUMN
1 1/2" = 1'-0"

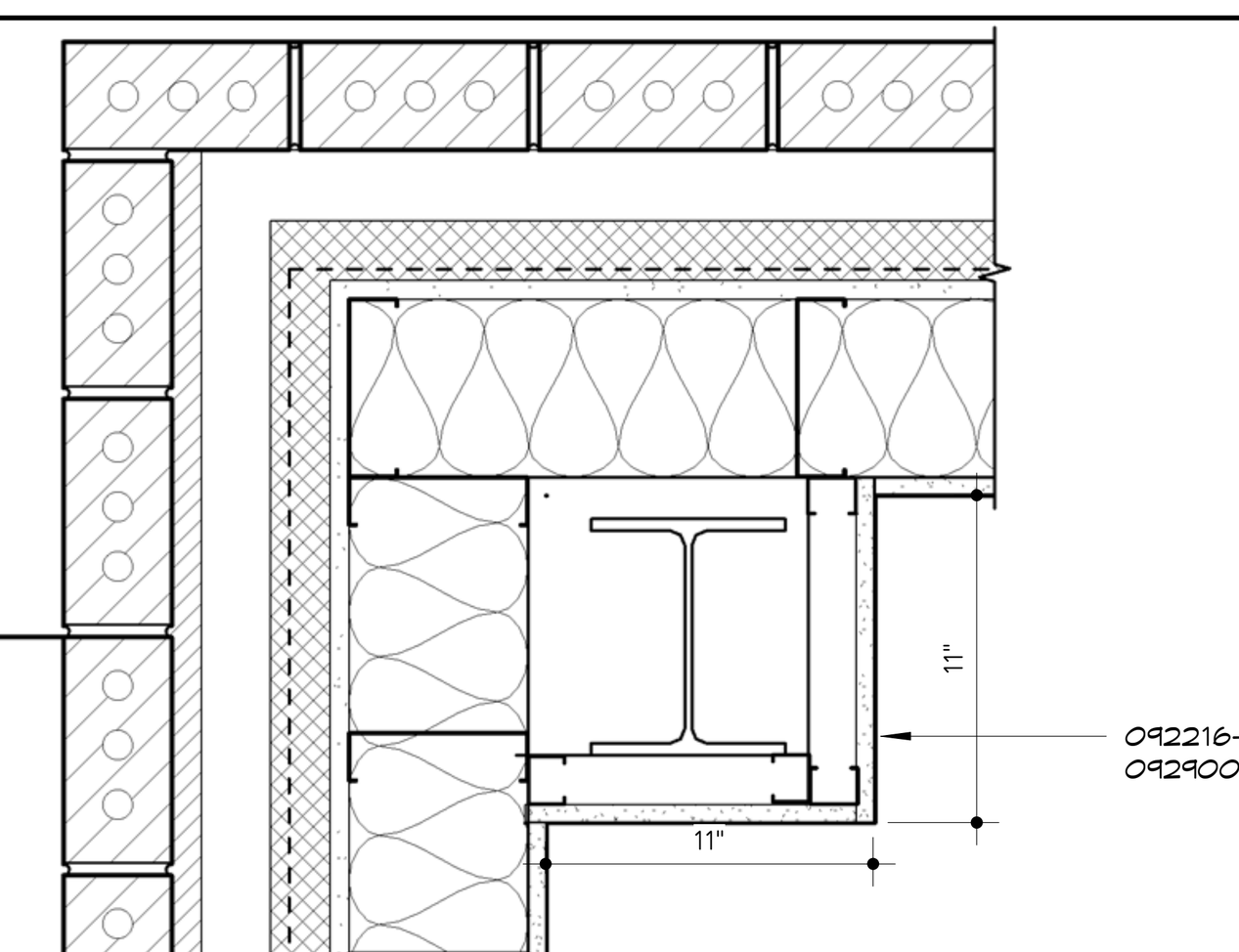

7 TYP. COLUMN AT CORNER
1 1/2" = 1'-0"

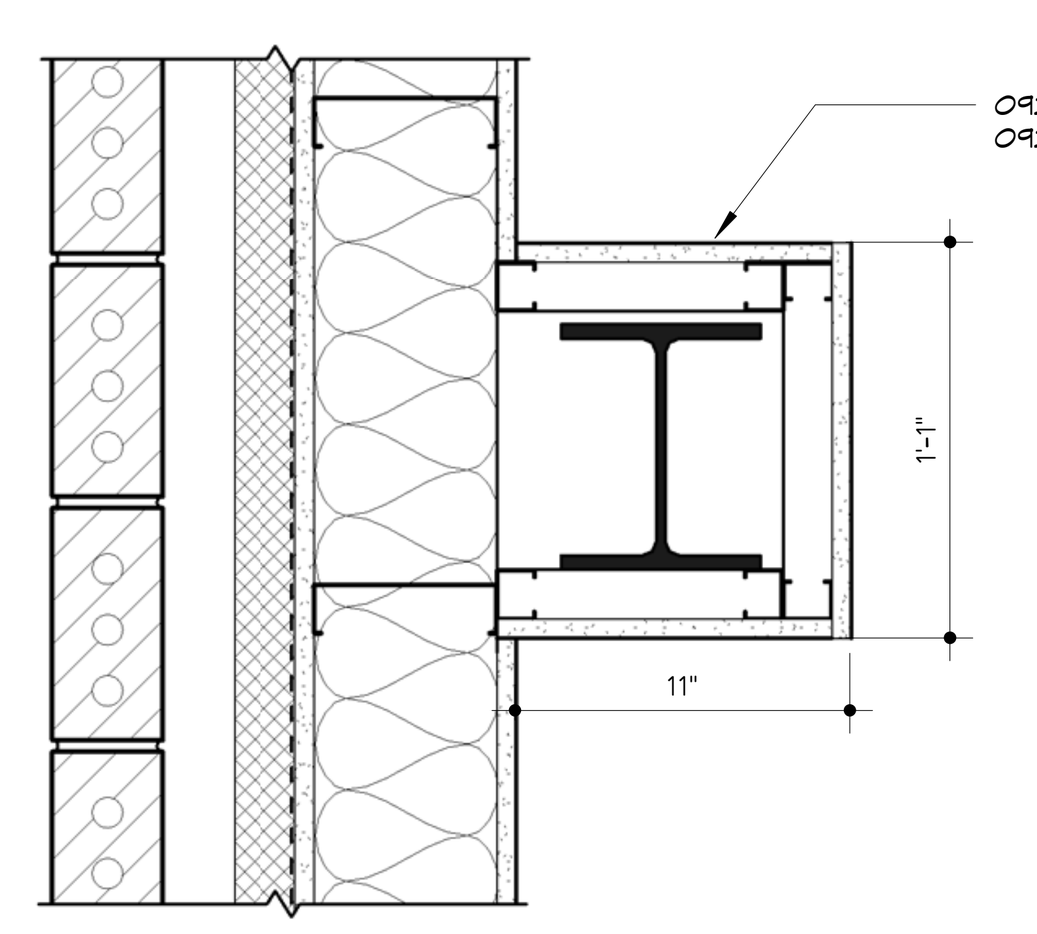

8 TYP. COLUMN AT WALL
1 1/2" = 1'-0"

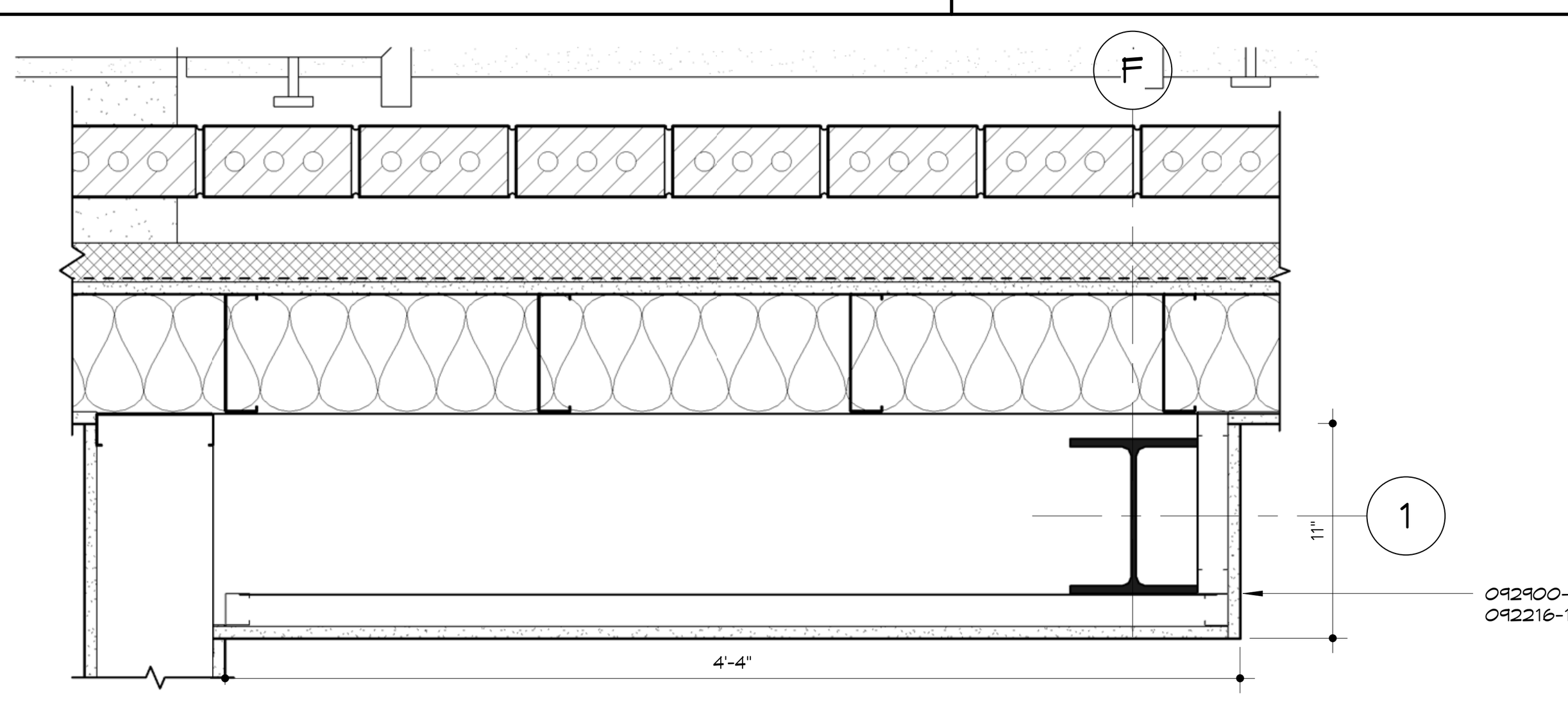

9 COLUMN F1
1 1/2" = 1'-0"

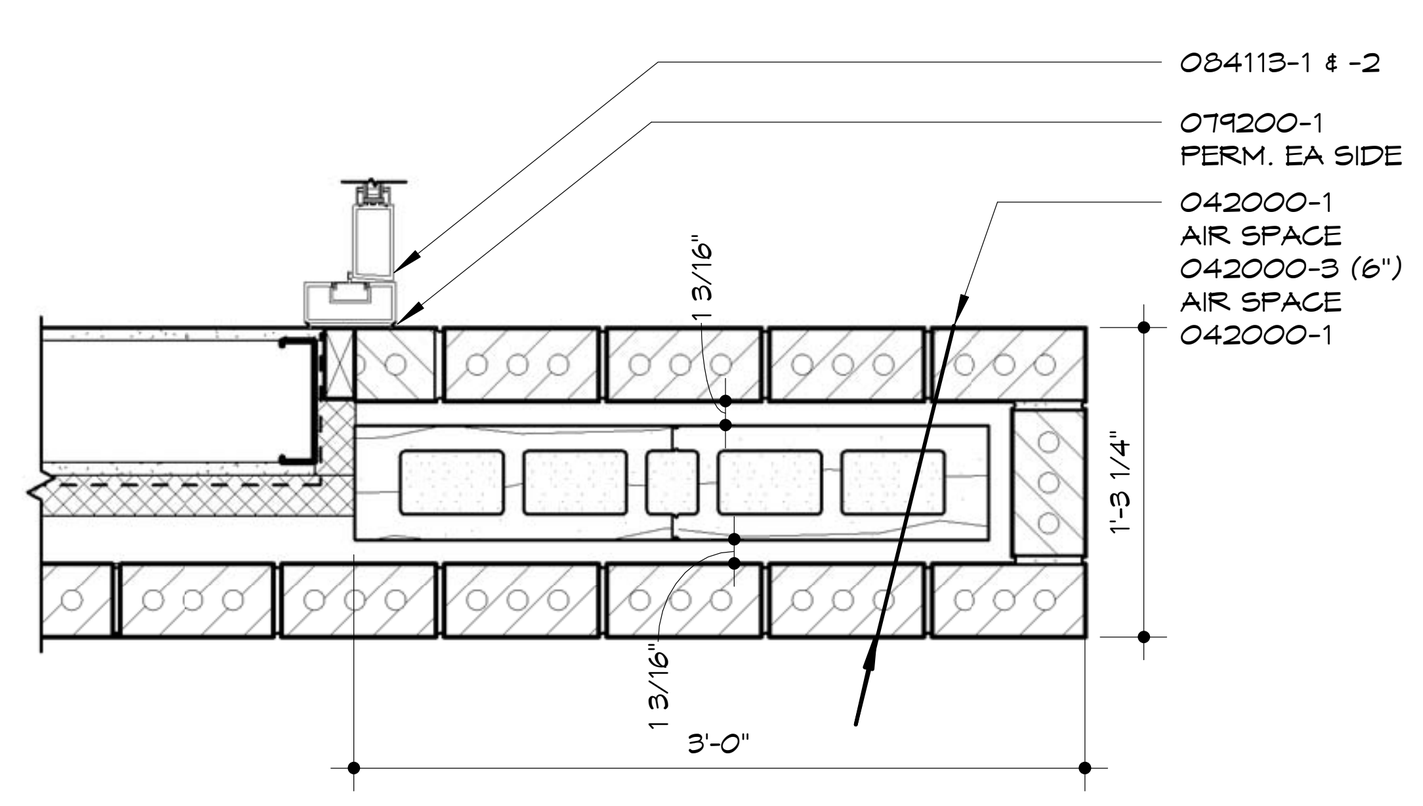

11 SOUTH WING WALL
1" = 1'-0"

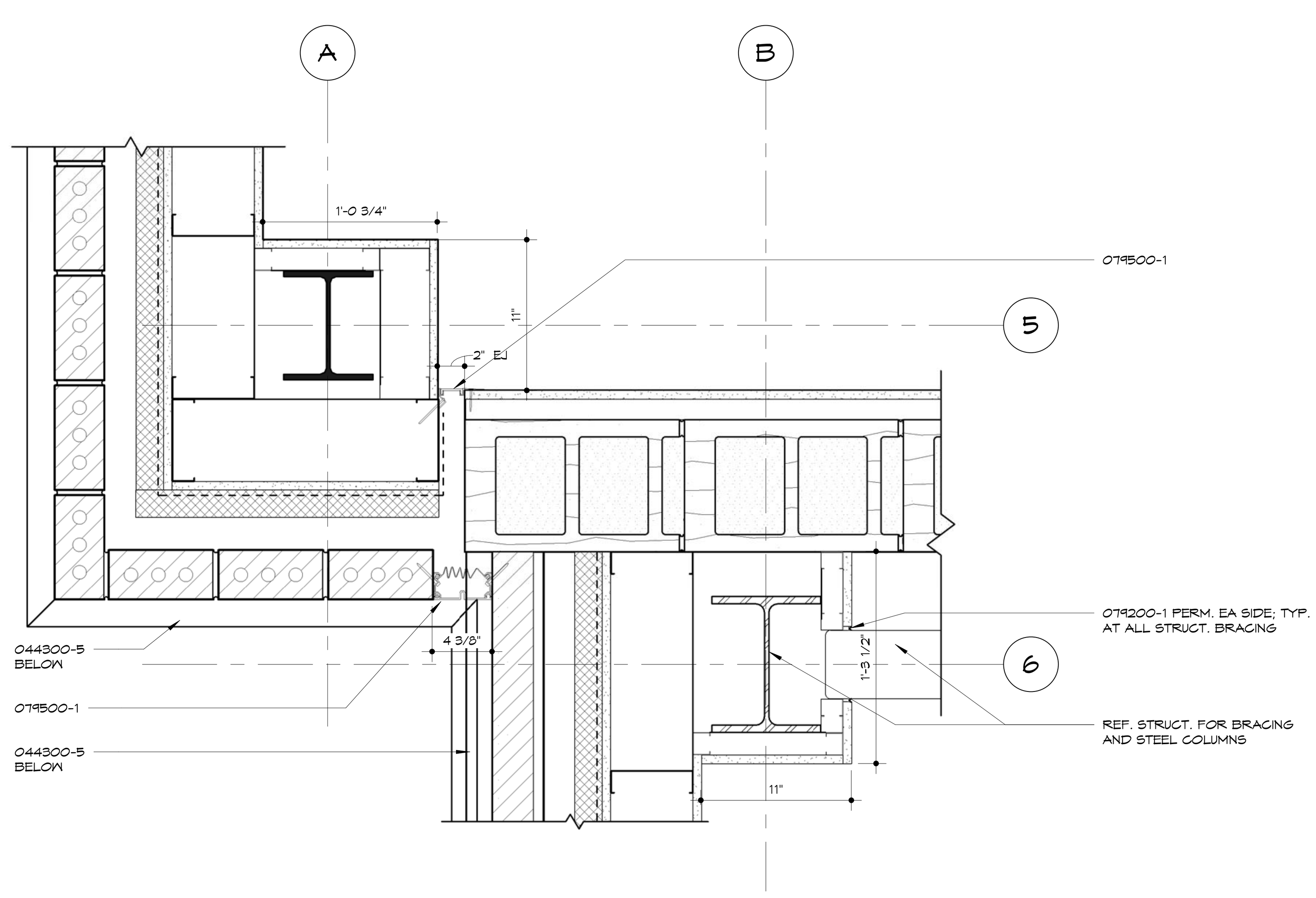

12 BUILDING EXPANSION JOINT COLUMN A5
1 1/2" = 1'-0"

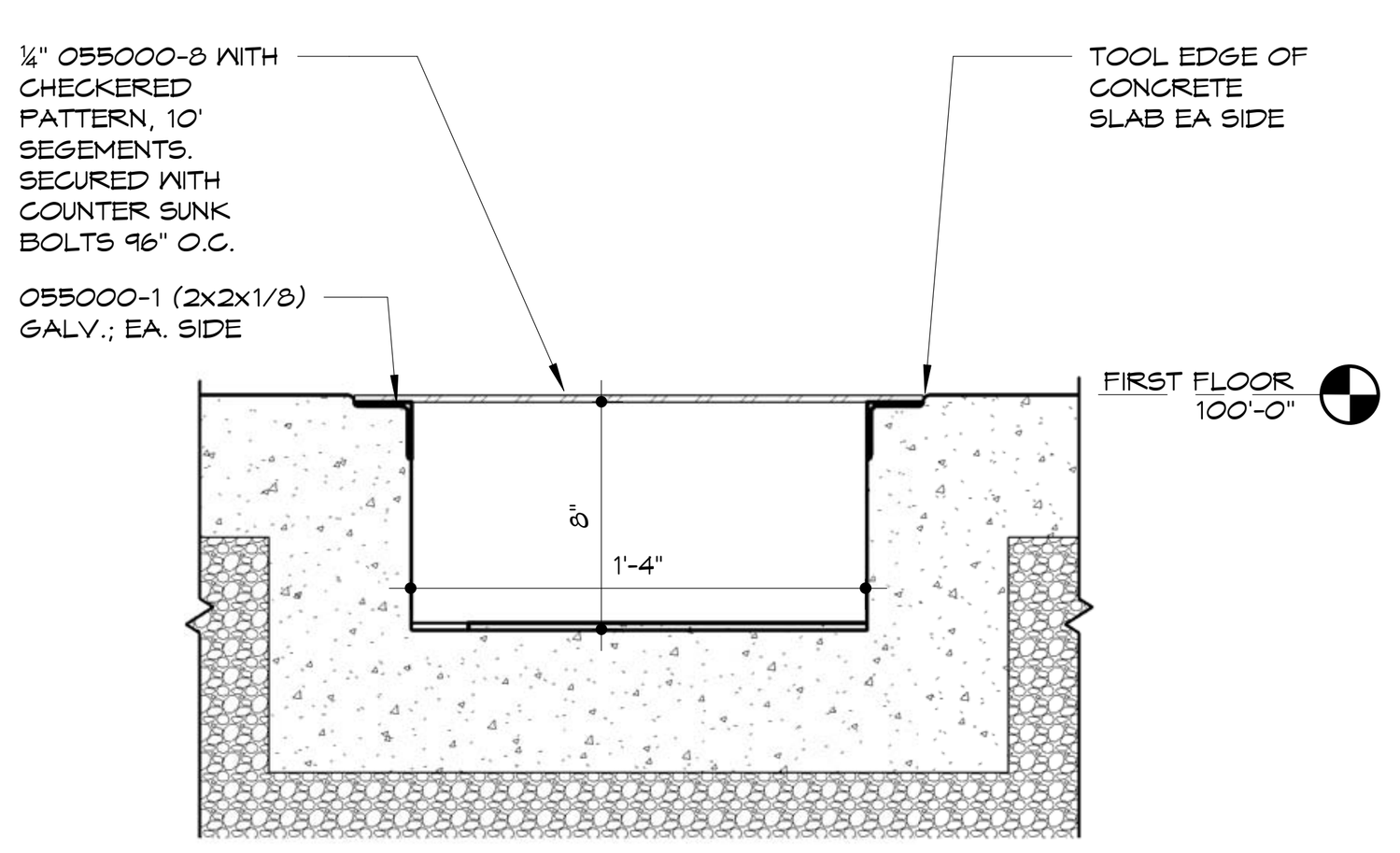

10 BOILER FLOOR TRENCH
1 1/2" = 1'-0"

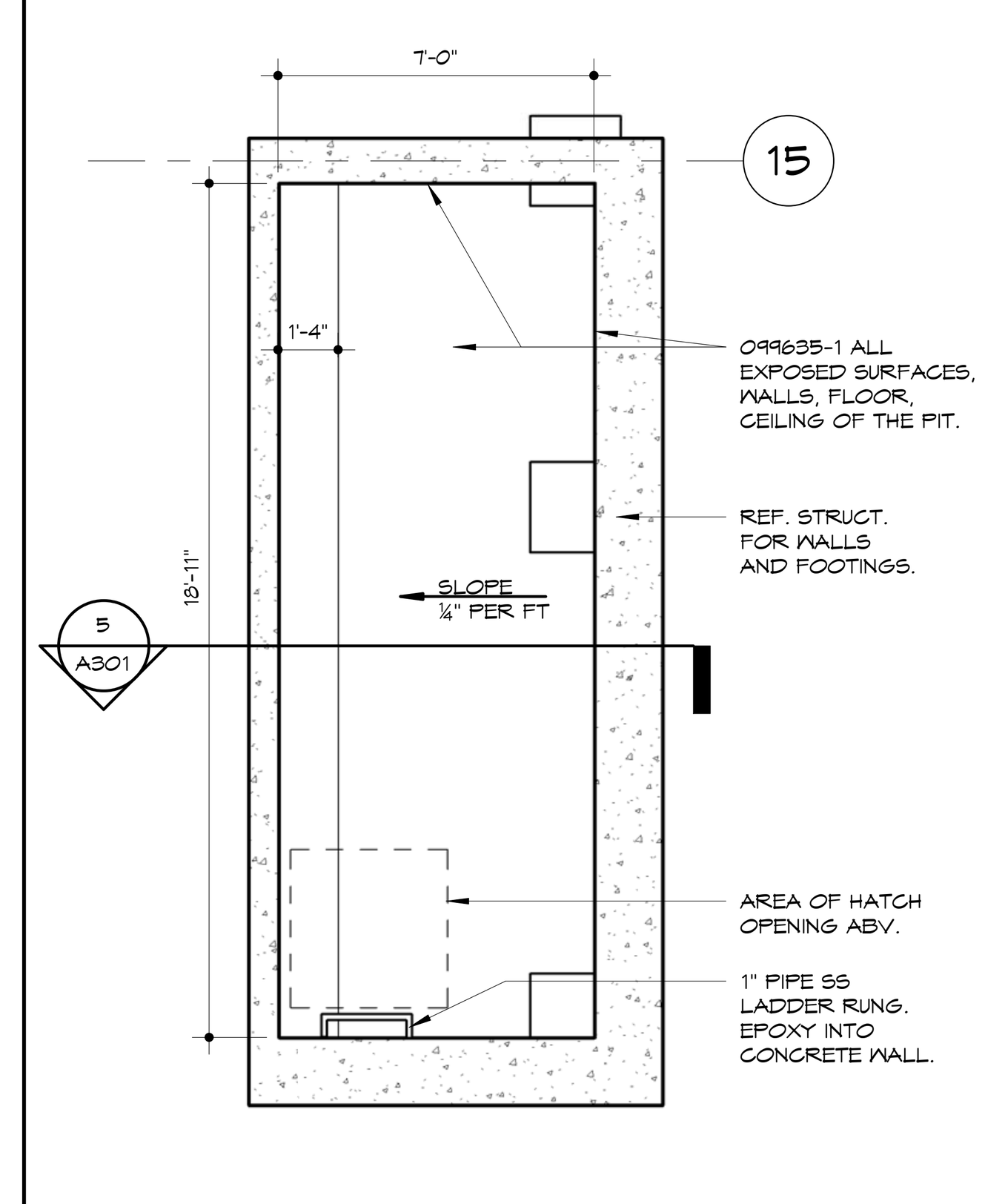

5 MECHANICAL PIT
1/4" = 1'-0"

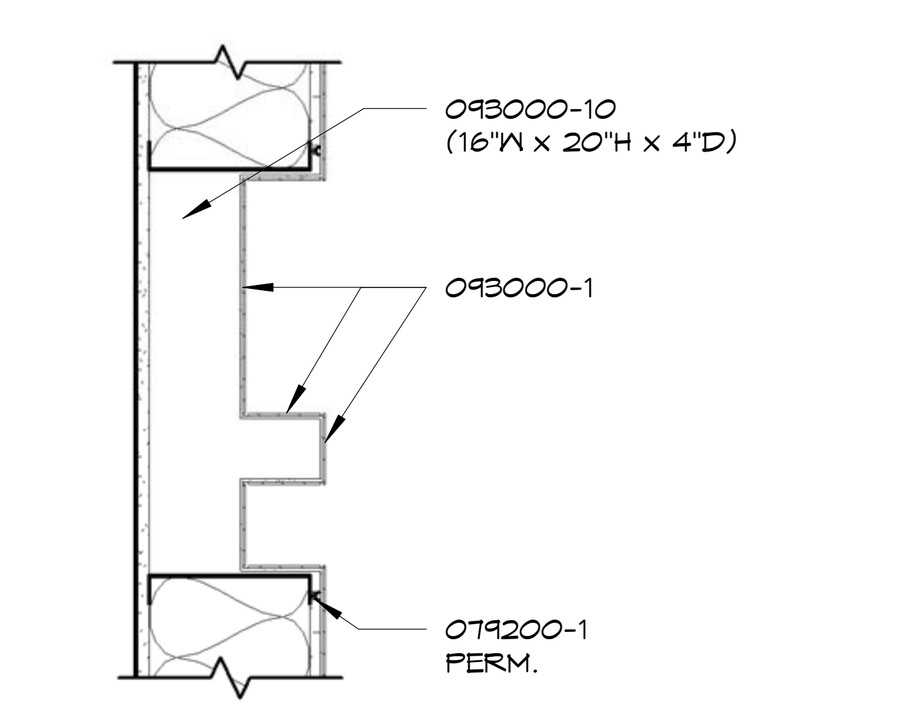

15 SHOWER NICHE
1" = 1'-0"

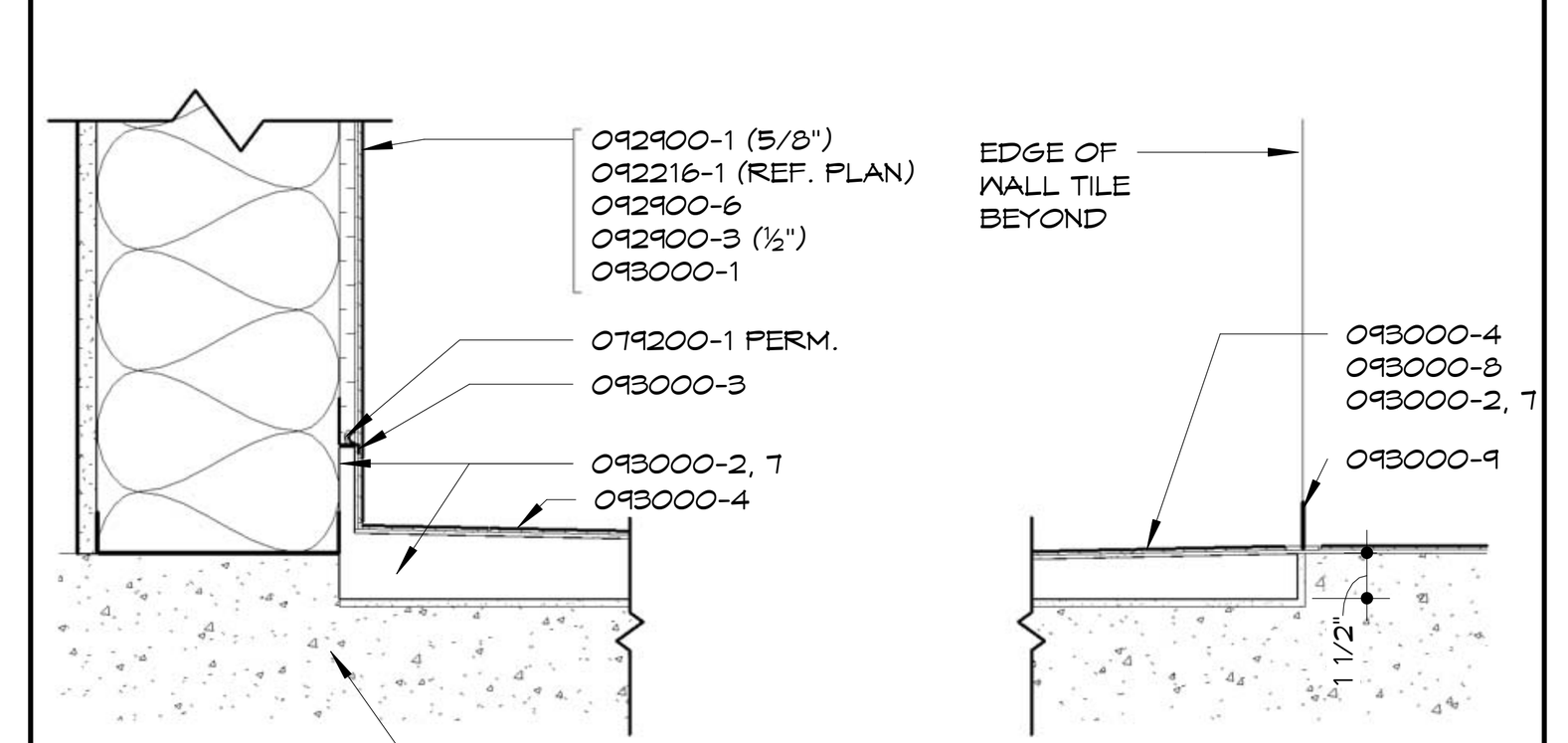

17 SHOWER PAN
1 1/2" = 1'-0"

KEYNOTES

Note: Keynotes are drawn from a master list & may not be sequentially numbered. Sizes (Ex: 2x4) or other info. following keynote on drawings indicates criteria for those materials/locations which may differ from std. material specified.

033000	-1	Concrete Structure	081113	-1	Steel Door
	-2	Concrete Floor Slab		-2	Steel Frame
	-3	Vapor Barrier		-3	Frame Anchor
	-4	Welded Wire Fabric		-4	Louver
	-5	Steel Reinforcing Bar		-5	Plaster Guard
	-6	Rustication Joint		-6	FPR Door
	-7	Waterstop	081416	-1	Flush Wood Door
	-8	Dovetail Anchor	083113	-1	Access Door
	-9	Sidewalk		-2	Access Door Frame
	-10	Premolded Joint Filler		-3	Floor Access Door
035300	-1	Concrete Topping	083323	-1	Overhead Coiling Door
042000	-1	Face Brick		-2	Coiling Counter Door
	-2	Concrete Masonry Unit - Normal Weight (")	083613	-1	Sectional Overhead Door
				-2	Sectional Overhead Door Track
	-3	Concrete Masonry Unit - Lightweight (")		-3	Weatherstripping
	-4	Wire Reinforcing	084113	-1	Aluminum Entrance Door
	-5	Metal Tie/Anchor		-2	Aluminum Entrance Frame
	-6	Through Wall Flashing		-3	Sunshade
	-7	Control Joint Strip		-4	Aluminum Subsill
	-8	Bond Beam (")	084413	-1	Glazed Aluminum Curtain Wall
	-9	Compressible Filler			
	-10	Weep Hole		-2	Threshold
	-11	Cavity Drainage Material		-3	Sunshade Louver
	-12	Termination Bar		-4	Aluminum Subsill
044300	-1	Stone Masonry	087100	-1	Track Hardware
	-2	Anchor	088000	-1	Glazing (as scheduled)
	-3	Stone Jamb	088853	-1	Securtiy Glazing (as scheduled)
	-4	Stone Sill			
	-5	Belt Course	089119	-1	Louvers and Vents
047200	-1	Cast Stone	092216	-1	Steel Stud (")
051200	-1	Steel Beams		-2	Steel Stud Runner (")
	-2	Steel Column		-3	Furring Channel (")
	-3	Steel Tube	092400	-1	Portland Cement Plastering
	-4	Steel Channel		-2	Metal Lath
052100	-1	Steel Joist		-3	Casing Bead
	-2	Joist - Extended End	092900	-1	Gypsum Board (")
	-3	Joist - Ceiling Extension		-2	Fire Rated Gypsum Board (")
053100	-1	Metal Decking			
	-3	Steel Composite Decking		-3	Cementitious Tile Backer Panel
	-2	Flexible Closure Strips			
054000	-1	Structural Steel Studs		-4	Metal Suspension System
	-2	Structural Steel Joists		-5	Acoustical Sealant
	-3	"C" Closure		-6	Acoustical Insulation (")
055000	-1	Steel Angle		-7	Metal Edge Trim
	-4	Steel Channel		-8	Auxiliary Support Framing
	-5	Steel Lintel		-9	Metal Control Joint
	-6	Steel Pipe		-10	High Impact Gypsum Board
	-7	Steel Tube		-11	Concrete Interior Finishing Compound
	-8	Steel Plate			
	-9	Steel Ladder		-12	Stiffener
	-10	Steel Bollard	093000	-1	Porcelain Wall Tile (" x ")
055100	-1	Steel Stairs			
	-2	Steel Stair Stringer		-2	Shower Pan
	-3	Steel Embed Plate		-3	Shower Pan Flashing
055213	-1	Steel Pipe Handrail		-4	Porcelain Floor Tile (" x ")
	-2	Steel Pipe Rail/Post			
	-3	Steel Handrail Wall Bracket		-5	Tile Base
	-4	Steel Rod		-6	Tile Cap
055300	-1	Steel Grating		-7	Setting Bed
	-2	Steel Frame		-8	Uncoupling water-proof membrane
057300	-1	Decorative Metal Railings			
057500	-1	Ornamental Metal Stamped Grille		-9	Shower Splashguard
				-10	Shower Niche
061053	-1	2x Wood Nailer (")	095113	-1	Acoustical Panel ('x ') (F = Fire Rated)
	-2	2x Wood Blocking (")			
	-3	1x Wood Continuous (")		-2	Ceiling Suspension System
	-4	Plywood (")		-3	Edge Mold Trim
	-5	#30 Felt		-4	Auxiliary Support Framing
	-6	#15 Felt	096513	-1	Resilient Tile Flooring
	-7	Sheathing (")		-2	Resilient Wall Base
064116	-1	Interior Architectural Woodwork		-3	Edge Strip
				-4	Tactile Warning Surface
	-2	High Pressure Laminate		-5	Resilient Stair Tread
	-3	Cabinet Liner Laminate		-6	Resilient Stair Riser
	-4	Particle Board		-7	Resilient Stringer Skirt
	-5	Plywood		-8	Resilient STair Nose
	-6	3mm Edge Molding	096813	-1	Carpet Tile
	-7	Solid Wood Blocking	096900	-1	Access Flooring
	-8	Hardwood	099113	-1	Exterior Painting
	-9	Steel Tube/Leg Frame	099123	-1	Interior Painting
	-10	Door Hinge	099635	-1	Secondary Containment Coating System
	-11	Door/Drawer Pull			
	-12	Magnetic Catch	101400	-1	Signage
	-13	Drawer	102113	-1	Toilet Partition
	-14	Shelf Supports		-2	Urinal Screen
	-15	Countertop	102213	-1	Wire Mesh Partitions
	-16	Solid-Surfacing Material	102600	-1	Impact-Resistant Cornerguard
071113	-1	Bituminous Dampproofing	102800	-1	Tissue Dispenser
071326	-1	Self-Adhering Sheet Waterproofing		-2	Framed Mirror
				-3	Sanitary Napkin Disposer
072100	-1	Foundation Wall or Under Slab Insulation (R-)		-4	Grab Bar
				-5	Shower Seat
	-2	Cavity Wall Insulation (R-)		-6	Shower Curtain Rod
	-3	Building Insulation - Unfaced (R-)		-7	Coat/Robe Hook
				-8	Shower Curtain
	-4	Building Insulation - Faced (R-)	104413	-1	Fire Extinguisher Cabinet
			104416	-1	Fire Extinguisher
	-5	Sill Sealer	105113	-1	Personnel Locker
	-6	Safing Insulation		-2	Locker
072726	-1	Fluid Applied Membrane Air Barrier		-3	Bench
			105300	-1	Pre- Manufactured Canopies
	-2	Flashing Tape			
074213	-1	Metal Wall Panel (Type 1)	107500	-1	Flagpole
	-2	Trim	108113	-1	Deterrent Spikes
	-3	Z-Furring (")	122413	-1	Roller Window Shades
	-4	Metal Wall Panel (Type 2)	133600	-1	Spray Painting Booth
	-5	Metal Soffit Panel	142400	-1	Hydraulic Elevator
075423	-1	Thermoplastic Polyolefin (TPO) Roofing	311000	-1	Site Clearing
			312000	-1	Earth Moving
	-2	Roof Insulation Flat		-2	Interior Fill
	-3	Roof Insulation Tapered		-3	Exterior Fill
	-4	Roof Expansion Joint		-4	Granular Drainage Course
	-5	Coverboard		-5	Subbase Course
	-6	Walkway Protection Board	321313	-1	Concrete Paving
076200	-1	Sheet Metal Flashing and Counterflashing	334600	-1	Perforated Wall Pipe & Fittings
	-2	Pre-Finished Roof Edge		-2	Geotextile Filter Fabric (Flat/Sock)
	-3	Pre-Finished Coping			
	-4	Sheet Metal Reglet		-3	Drainage Panel
	-5	Sheet Metal Gutter			
	-6	Sheet Metal Downspout			
	-7	Sheet Metal Scupper			
077129	-1	Roof Expansion Joint			
077200	-1	Roof Hatch/Ladder			
078413	-1	Penetration Firestopping			
078443	-1	Joint Firestopping			
079200	-1	Sealant - Rake where required			
	-2	Joint Filler			
	-3	Gasket			
	-4	Backer Rod			
079500	-1	Expansion Control			

HTK ARCHITECTS PA
900 S. KANSAS AVE., SUITE 200
TOPEKA KANSAS 66612
P 785.266.5373
9300 W 110TH ST. STE. 150
OVERLAND PARK, KANSAS 66210
P 913.663.5373
www.htkarchitects.com

R. KEITH BLACKBURN LICENSED 3435 4-15-15 KANSAS PROFESSIONAL ARCHITECT

DENNIS A. HAUG LICENSED 4-15-15 2567 KANSAS PROFESSIONAL ARCHITECT

DATE:
- 4-15-15

REVISED DATE:
- 12-18-14
- 2-9-15
- 3-10-15
-

HTK PROJECT NUMBER:
- 1410.03

Department of Administration
Office of Facilities and Procurement Management
800 SW Jackson, Suite 700
Topeka, Kansas 66612-1216
Phone 785-296-8899
FAX 785-296-3456

STATE OF KANSAS
STATE OF KANSAS ENERGY & SERVICE CENTER
221 SW 7th Street
BUILDING NUMBER 17300-0038

DATE: 4-15-15 DRAWN BY: Author CHECKED BY: Checker REV:

ENLARGED FLOOR PLANS AND DETAILS

A-012651

A104

CONSTRUCTION DOCUMENTS

4/16/2015 11:08:24 AM C:\Users\jms\Documents\REVIT\State of Kansas Energy_Central_jms.rvt

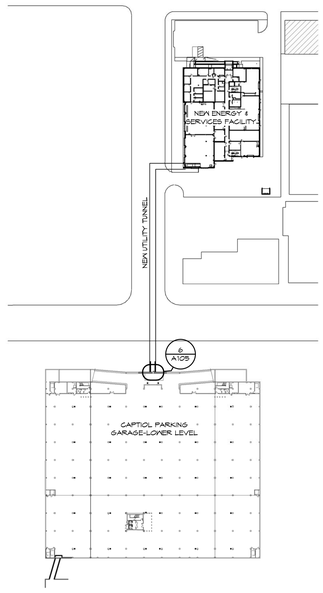

1 KEY PLAN- CAPITOL LOWER PARKING GARAGE
1" = 100'-0"

NORTH

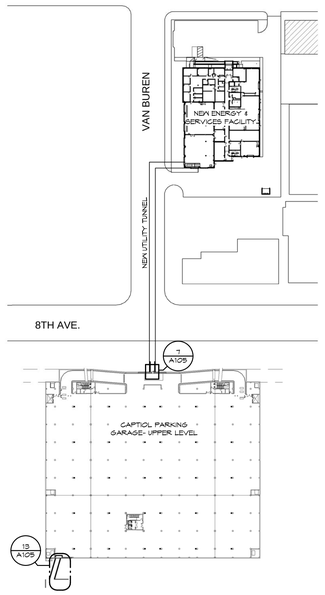

2 KEY PLAN-CAPITOL UPPER PARKING GARAGE
1" = 100'-0"

NORTH

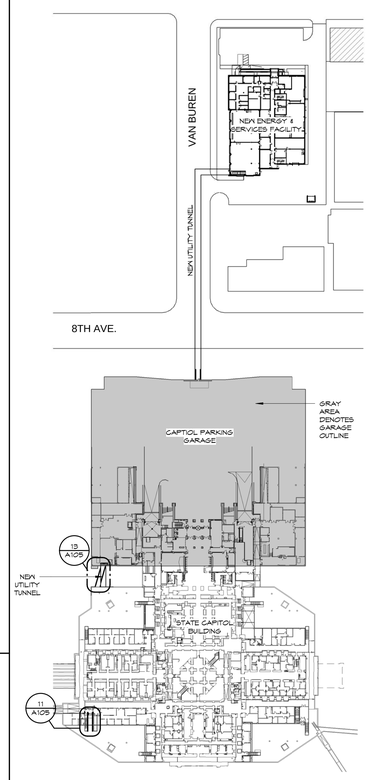

3 KEY PLAN-CAPITOL GROUND FLOOR
1" = 100'-0"

NORTH

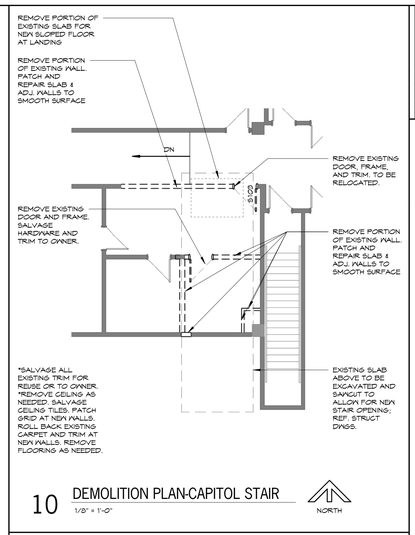

10 DEMOLITION PLAN-CAPITOL STAIR
1/8" = 1'-0"

NORTH

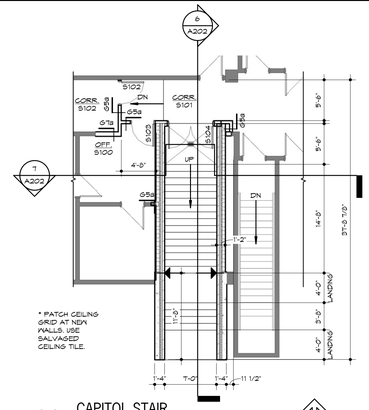

11 CAPITOL STAIR
1/8" = 1'-0"

NORTH

ROOM FINISH SCHEDULE-CAPITOL									
ROOM MARK	ROOM NAME	FLOOR	BASE	WALLS				CEILING	NOTES
				NORTH (or TYP.)	EAST	SOUTH	WEST		
5100	OFF.	CPT	RB	LTX	LTX	LTX		TYPE 1	1, 2
5101	CORR.	VCT	RB			LTX	LTX		3, 4
5102	CORR.	EXIST	EXIST	LTX	LTX	LTX			
5103	SM MAIN SHOP	SC	RB			LTX	LTX		4

CAPITAL ROOM FINISH NOTES

1. EXISTING BROADLOOM CARPET TO BE RELAID.
2. ADJUST EXISTING CEILING GRID AND PANELS TO FIT WALL AND LIGHTING MODIFICATIONS.
3. MATCH EXISTING VCT.
4. MATCH EXISTING RUBBER BASE.

GENERAL DEMOLITION NOTES

A) WALLS & STRUCTURE NOTED TO REMAIN SHALL BE BRACED & SUPPORTED AS NECESSARY DURING DEMO & UNTIL NEW CONSTRUCTION IS IN PLACE.
B) PROTECT EXISTING CONSTRUCTION AND FINISHES TO REMAIN FROM DAMAGE DURING DEMOLITION.
C) REPAIR SURFACES ADJACENT TO DEMOLITION AREAS AS REQUIRED TO MATCH ADJACENT FINISHES.
D) COORDINATE DEMOLITION WORK WITH NEW WORK.
E) REF. MECHANICAL, ELECTRICAL & PLUMBING FOR EXTENT OF RELATED DEMOLITION. REPAIR ALL WALLS/FLOOR/CEILING PENETRATIONS WHERE DEVICES/EQUIPMENT/ETC. WAS REMOVED. MATCH ADJ. FINISH & MATERIAL.
F) REF. STRUCT FOR RELATED DEMOLITION.
G) WHEN REPLACING SURFACE TO MATCH ADJACENT, MAKE NEW SURFACE FLUSH WITH ADJACENT UNLESS NOTED OTHERWISE.
H) SOME NEW CONSTRUCTION WILL REQUIRE REMOVAL/CUTTING AND ADDITIONAL DEMO WORK NOT SHOWN ON DEMO SHEETS. REF. ENTIRE SET FOR DEMOLITION.
I) FIELD VERIFY EXTENT OF DEMO ITEMS BEFORE BIDDING.
J) DEMO WALLS & DOORS SHOWN DASHED IN AREAS OF NEW WORK. CONSULT ARCHITECT FOR ANY DISCREPANCIES OR QUESTIONS.
K) WALLS, SLABS, CEILING, ETC. WITHIN RENOVATION AREAS NOT CALLED FOR DEMO SHALL BE PATCHED & REPAIRED TO MATCH ADJ. SURFACES & FINISHES, TYP. PRIOR TO FINISHING AS SCHED.
L) WHERE NEW FINISHES ARE INDICATED ON PLANS, SPECIFICATIONS, OR SCHEDULES, ANY EXISTING FINISHES IN CONFLICT SHALL BE DEMOLISHED. CONTRACTOR SHALL FIELD VERIFY EXTENT OF EXISTING FINISHES PRIOR TO BIDDING.



4 DEMOLITION PLAN UTILITY TUNNEL PIPES AT CAPITOL LOWER GARAGE
1/8" = 1'-0"

NORTH

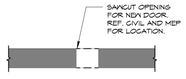

5 DEMOLITION PLAN UTILITY TUNNEL DOOR AT UPPER GARAGE
1/8" = 1'-0"

NORTH

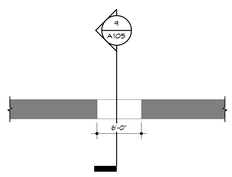

6 UTILITY TUNNEL PIPES AT CAPITOL LOWER GARAGE
1/8" = 1'-0"

NORTH

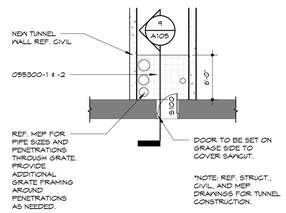

7 UTILITY TUNNEL DOOR AT UPPER GARAGE
1/8" = 1'-0"

NORTH

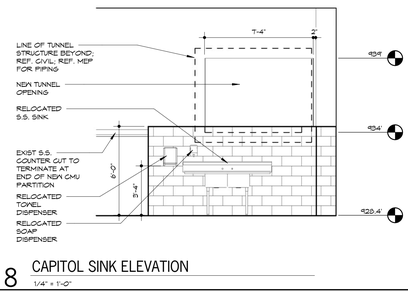

8 CAPITOL SINK ELEVATION
1/4" = 1'-0"

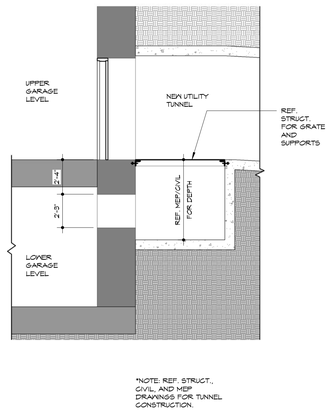

9 TUNNEL AT CAPITOL
1/4" = 1'-0"

NORTH

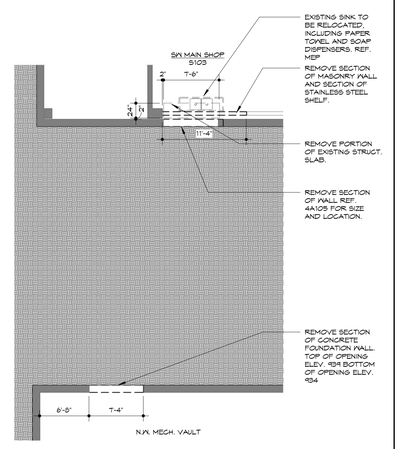

12 DEMOLITION PLAN- UTILITY CONNECTION
1/8" = 1'-0"

NORTH

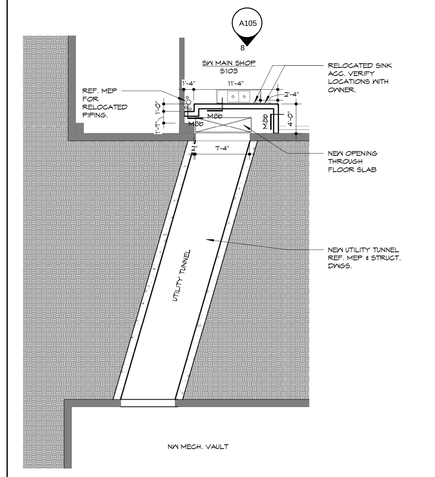

13 UTILITY CONNECTION
1/8" = 1'-0"

NORTH

NOTE: REFER TO STRUCTURAL DRAWINGS FOR REINFORCING STEEL IN EXTERIOR WALLS AND CONCRETE NOT SHOWN

NOTE: REFER TO ALL DETAILS (DETAILS LOCATED ON THIS SHEET, PRECEEDING SHEETS AND FOLLOWING SHEETS) FOR APPLICABLE NOTES NOT SHOWN

NOTE: REFER TO ALL SECTIONS (SECTIONS LOCATED ON THIS SHEET, PRECEEDING SHEETS AND FOLLOWING SHEETS) FOR APPLICABLE NOTES NOT SHOWN

HTK ARCHITECTS PA
9300 W 110TH ST. STE. 150
OVERLAND PARK, KANSAS 66210
P 913.663.3373
900 S. KANSAS AVE., SUITE 200
TOPEKA KANSAS 66612
T 785.266.3373
www.htkarchitects.com

DANIEL WAYNE BLACKBURN — LICENSED — 3435 — KANSAS — PROFESSIONAL ARCHITECT

DENNIS A. HAUN — LICENSED — 4-15-15 — 25672 — KANSAS — PROFESSIONAL ARCHITECT

DATE:
- 4-15-15

REVISED DATE:
- 12-18-14
- 2-9-15
- 3-10-15

HTK PROJECT NUMBER:
- 1410.03

Department of Administration
Office of Facilities and
Procurement Management
800 SW Jackson, Suite 700
Topeka, Kansas 66612-1216
Phone 785-296-3899
FAX 785-296-3456

STATE OF KANSAS
STATE OF KANSAS ENERGY & SERVICE CENTER
221 SW 7th Street
BUILDING NUMBER 173000038

DATE: 4-15-15 DRAWN BY: Author CHECKED BY: Checker REV:

STATE HOUSE FLOOR PLANS

A-012651

A105

CONSTRUCTION DOCUMENTS

4/16/2015 11:08:42 AM C:\Users\jms\Documents\REVIT\State of Kansas Energy_Central_jms.rvt

JCSBC
2-2-2016
AIU9G.--0032

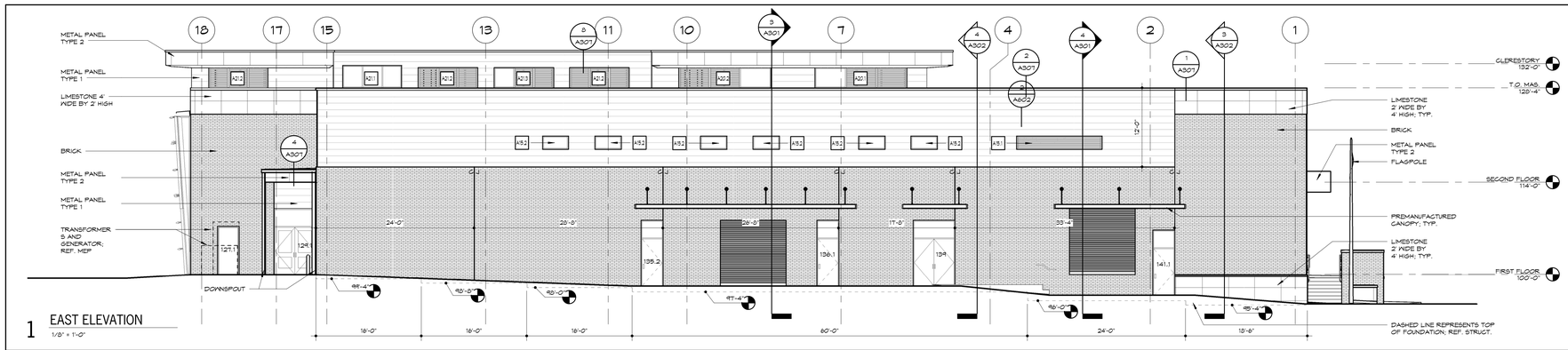

1 EAST ELEVATION
1/8" = 1'-0"

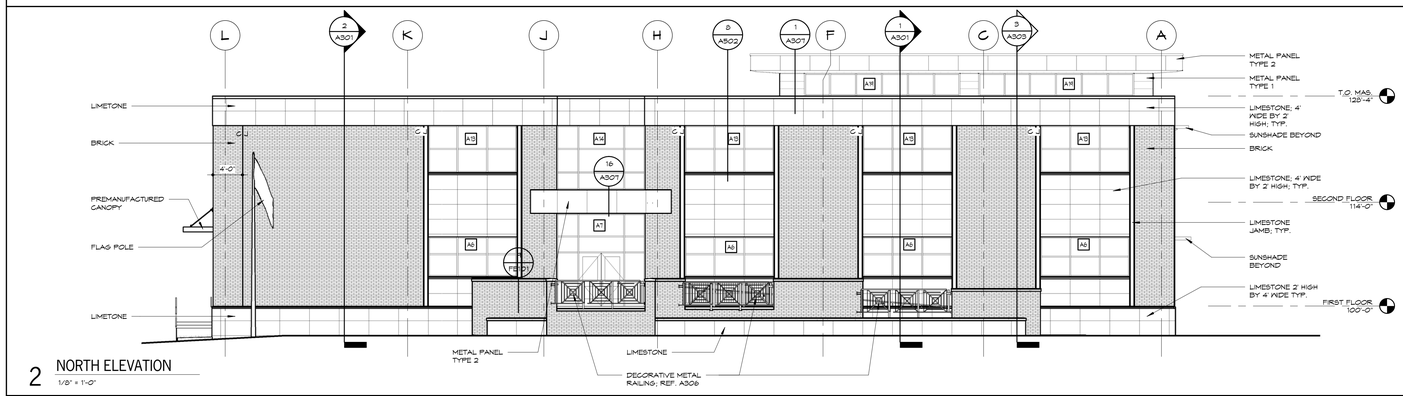

2 NORTH ELEVATION
1/8" = 1'-0"

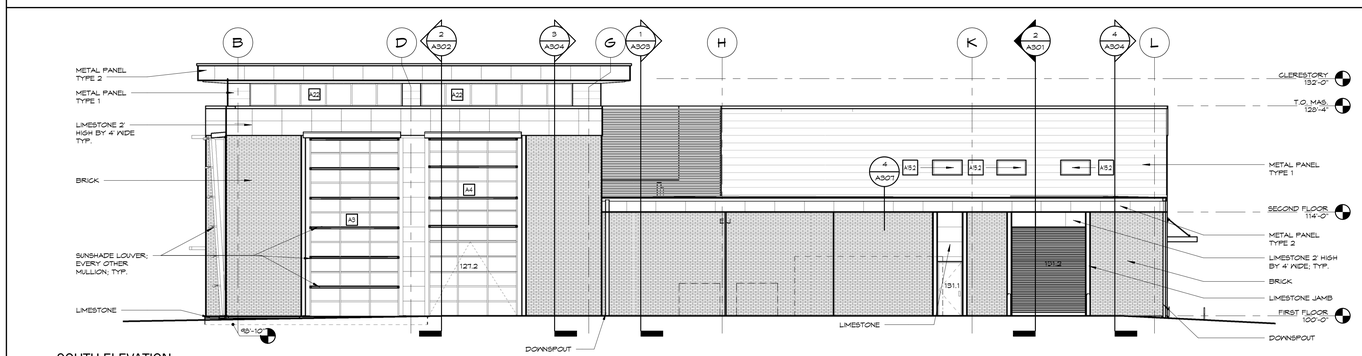

3 SOUTH ELEVATION
1/8" = 1'-0"

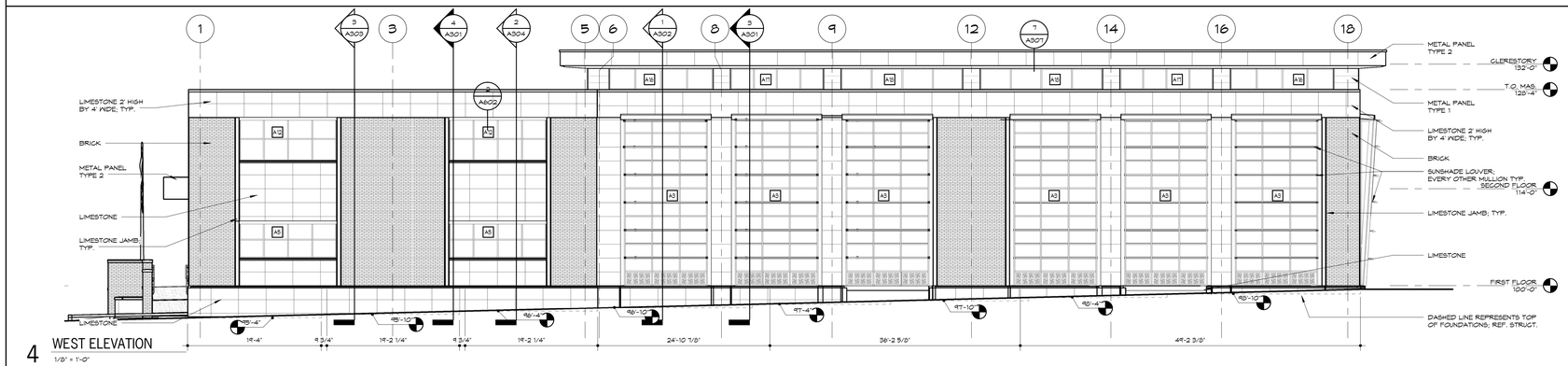

4 WEST ELEVATION
1/8" = 1'-0"

KEYNOTES

Note: Keynotes are drawn from a master list. It may not be sequentially numbered. Sizes (Ex: 2x4) or other info. following keynote on drawings indicates criteria for those materials/locations which may differ from std. material specified.

033000	-1	Concrete Structure
	-2	Concrete Floor Slab
	-3	Vapor Barrier
	-4	Welded Wire Fabric
	-5	Steel Reinforcing Bar
	-6	Reticulation Joint
	-7	Waterstop
	-9	Dovetail Anchor
	-A	Sidewalk
	-10	Premolded Joint Filler
035300	-1	Concrete Topping
042000	-1	Face Brick
	-2	Concrete Masonry Unit - Normal Weight (")
	-3	Concrete Masonry Unit - Lightweight (")
	-4	Wire Reinforcing
	-5	Metal Tie/Anchor
	-6	Through Wall Flashing
	-7	Control Joint Strip
	-8	Bond Beam (")
	-9	Compressible Filler
	-10	Weep Hole
	-11	Cavity Drainage Material
	-12	Lintel Bar
044300	-1	Stone Masonry
	-2	Anchor
	-3	Stone Jamb
	-4	Stone Sill
	-5	Belt Course
047200	-1	Cast Stone
051200	-1	Steel Beams
	-2	Steel Column
	-3	Steel Tube
	-4	Steel Channel
052100	-1	Steel Joist
	-2	Joist - Extended End
	-3	Joist - Ceiling Extension
053100	-1	Metal Decking
	-3	Steel Composite Decking
	-4	Steel Angle
054000	-1	Structural Steel Studs
	-2	Structural Steel Joists
	-3	"Z" Closure
055000	-1	Steel Angle
	-4	Steel Channel
	-5	Steel Lintel
	-6	Steel Pipe
	-7	Steel Tube
	-8	Steel Plate
	-9	Steel Ladder
	-10	Steel Bollard
055100	-1	Steel Stairs
	-2	Steel Stair Stringer
	-3	Steel Embed Plate
055213	-1	Steel Pipe Handrail
	-2	Steel Pipe Rail/Post
	-3	Steel Handrail Wall Bracket
	-4	Steel Rod
055300	-1	Steel Grating
	-2	Steel Frame
057300	-1	Decorative Metal Railings
057500	-1	Ornamental Metal Stamped Grille
061063	-1	2x Wood Nailer (")
	-2	2x Wood Blocking (")
	-3	1x Wood Continuous (")
	-4	Plywood (")
	-5	930 Felt
	-6	915 Felt
	-7	Sheathing (")
064116	-1	Plastic Architectural Millwork
	-2	High Pressure Laminate
	-3	Cabinet Liner Laminate
	-4	Particle Board
	-5	Plywood
	-6	3mm Edge Molding
	-7	Solid Wood Blocking
	-8	Hardwood
	-9	Steel Tube/Leg Frame
	-10	Door Hinge
	-11	Door/Drawer Pull
	-12	Magnetic Catch
	-13	Drawer
	-14	Shelf Supports
	-15	Countertop
	-16	Solid-Surfacing Material
071113	-1	Bituminous Dampproofing
071326	-1	Self-Adhering Sheet Waterproofing
072100	-1	Foundation Wall or Under Slab Insulation (R-)
	-2	Cavity Wall Insulation (R-)
	-3	Building Insulation - Unfaced (R-)
	-4	Building Insulation - Faced (R-)
	-5	Sill Sealer
	-6	Batting Insulation
072129	-1	Fluid Applied Membrane Air Barrier
	-2	Flashing Tape
074213	-1	Metal Wall Panel (Type 1)
	-2	Trim
	-3	Z-Furring (")
	-4	Metal Wall Panel (Type 2)
	-5	Metal Soffit Panel
075423	-1	Thermoplastic Polyolefin (TPO) Roofing
	-2	Roof Insulation Flat
	-3	Roof Insulation Tapered
	-4	Roof Expansion Joint
	-5	Coverboard
	-6	Walkway Protection Board
076200	-1	Sheet Metal Flashing and Counterflashing
	-2	Pre-Finished Roof Edge
	-3	Pre-Finished Coping
	-4	Sheet Metal Reglet
	-5	Sheet Metal Gutter
	-6	Sheet Metal Downspout
	-7	Sheet Metal Scupper
077129	-1	Roof Expansion Joint
077200	-1	Roof Hatch/Ladder
078413	-1	Penetration Firestopping
078445	-1	Joint Firestopping
079200	-1	Sealant - Rake where required
	-2	Joint Filler
	-3	Gasket
	-4	Backer Rod
079500	-1	Expansion Control
081113	-1	Steel Door
	-2	Steel Frame
	-3	Frame Anchor
	-4	Louver
	-5	Master Guard
	-6	FRP Door
083416	-1	Flush Hood Door
083313	-1	Access Door
	-2	Access Door Frame
	-3	Floor Access Door
083323	-1	Overhead Coiling Door
	-2	Coiling Counter Door
083613	-1	Sectional Overhead Door
	-2	Sectional Overhead Door Track
	-3	Weatherstripping
084113	-1	Aluminum Entrance Door
	-2	Aluminum Entrance Frame
	-3	Sunshade
	-4	Aluminum Sunsill
084413	-1	Glazed Aluminum Curtain Wall
	-2	Threshold
	-3	Translucent Louver
	-4	Aluminum Sunsill
087100	-1	Track Hardware
088000	-1	Glazing (as scheduled)
088853	-1	Security Glazing (as scheduled)
089416	-1	Louvers and Vents
092216	-1	Steel Stud (")
	-2	Steel Stud Runner (")
	-3	Furring Channel (")
092400	-1	Portland Cement Plastering
	-2	Metal Lath
	-3	Casing Bead
092900	-1	Gypsum Board (")
	-2	Fire Rated Gypsum Board (")
	-3	Cementitious Tile Backer Panel
	-4	Metal Suspension System
	-5	Acoustical Sealant
	-6	Acoustical Insulation (")
	-7	Metal Edge Trim
	-8	Auxiliary Support Framing
	-9	Metal Control Joint
	-10	High Impact Gypsum Board
	-11	Cementitious Interior Finishing Composite
	-12	Stiffener
093000	-1	Porcelain Wall Tile (" x ")
	-2	Shower Pan
	-3	Shower Pan Flashing
	-4	Porcelain Floor Tile (" x ")
	-5	Tile Base
	-6	Tile Cap
	-7	Setting Bed
	-8	Uncoupling water-proof membrane
	-9	Shower Splashguard
	-10	Shower Niche
095113	-1	Acoustical Panel (" x ") (F + Fire Rated)
	-2	Ceiling Suspension System
	-3	Edge Mold Trim
	-4	Auxiliary Support Framing
096513	-1	Resilient Tile Flooring
	-2	Resilient Wall Base
	-3	Edge Strip
	-4	Resilient Flooring Surface
	-5	Resilient Stair Tread
	-6	Resilient Stair Riser
	-7	Resilient Stringer Skirt
	-8	Resilient Stair Nose
096813	-1	Carpet Tile
096900	-1	Access Flooring
099113	-1	Exterior Painting
099123	-1	Interior Painting
099695	-1	Secondary Containment Coating System
101400	-1	Signage
102113	-1	Toilet Partition
	-2	Urinal Screen
102213	-1	Wire Mesh Partitions
102600	-1	Impact-Resistant Corrugated
102800	-1	Tissue Dispenser
	-2	Framed Mirror
	-3	Sanitary Napkin Disposer
	-4	Grab Bar
	-5	Shower Seat
	-6	Shower Curtain Rod
	-7	Coat/Robe Hook
	-8	Utility Shelf
104413	-1	Fire Extinguisher Cabinet
104419	-1	Fire Extinguisher
105113	-1	Personnel Locker
	-2	Locker
	-3	Bench
105500	-1	Pre-Manufactured Canopies
107500	-1	Flagpole
108113	-1	Deterrent Spikes
122413	-1	Roller Window Shades
135600	-1	Spray Painting Booth
142400	-1	Hydraulic Elevator
312000	-1	Site Clearing
312300	-1	Earth Moving
	-3	Interior Fill
	-3	Exterior Fill
	-4	Granular Drainage Course
	-5	Subbase Course
321313	-1	Concrete Paving
334600	-1	Perforated Wall Pipe & Fittings
	-2	Geotextile Filter Fabric (Flat Stock)
	-3	Drainage Panel

HTK ARCHITECTS PA
9300 W 110TH ST. STE. 150
OVERLAND PARK, KANSAS 66210
P 913.663.3373
900 S. KANSAS AVE., SUITE 200
TOPEKA, KANSAS 66612
P 785.266.3373
www.htkarchitects.com

DATE:
- 4-15-15

REVISED DATE:
- 12-18-14
- 2-9-15
- 3-10-15
-

HTK PROJECT NUMBER:
- 1410.03

Department of Administration
Office of Facilities and
Procurement Management
800 SW Jackson, Suite 700
Topeka, Kansas 66612-1216
Phone 785-296-0599
FAX 785-296-3456

STATE OF KANSAS
STATE OF KANSAS ENERGY & SERVICE CENTER
221 SW 7th Street
BUILDING NUMBER 17300-0038

DRAWN BY: DWB | CHECKED BY: CHK | REV:

DATE: 4-15-15

BUILDING ELEVATIONS

A-012651

A201

CONSTRUCTION DOCUMENTS

4/16/2015 11:09:27 AM C:\Users\jms\Documents\REVIT\State of Kansas Energy_Central_jms.rvt

JCSBC
2-2-2016
AIL9G.--0033

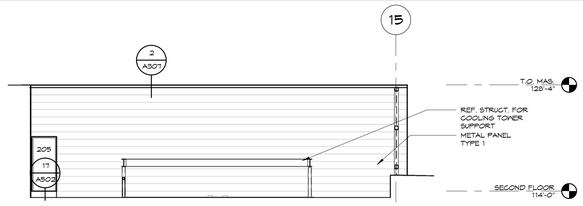

1 COOLING TOWER EAST
1/8" = 1'-0"

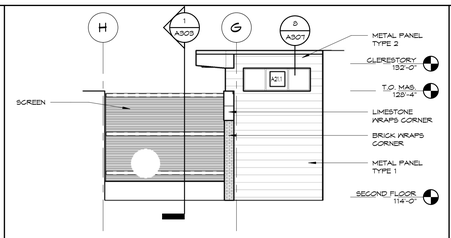

2 COOLING TOWER SOUTH
1/8" = 1'-0"

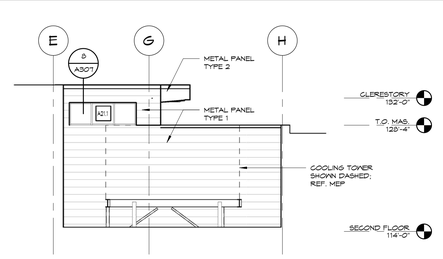

3 COOLING TOWER NORTH
1/8" = 1'-0"

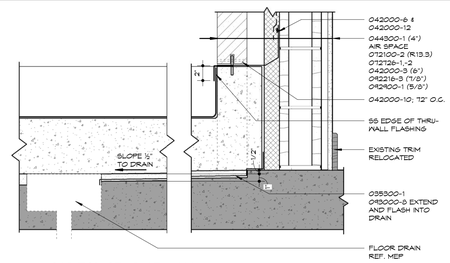

4 CAPITOL STAIR AT WALL
1 1/2" = 1'-0"

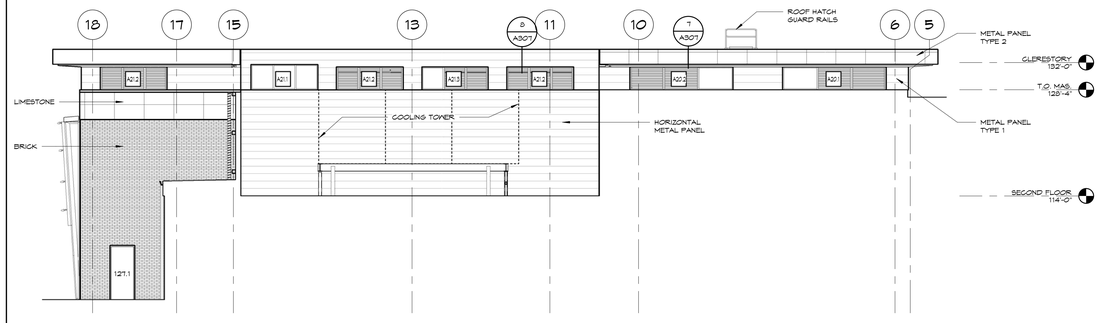

5 COOLING TOWER WEST
1/8" = 1'-0"

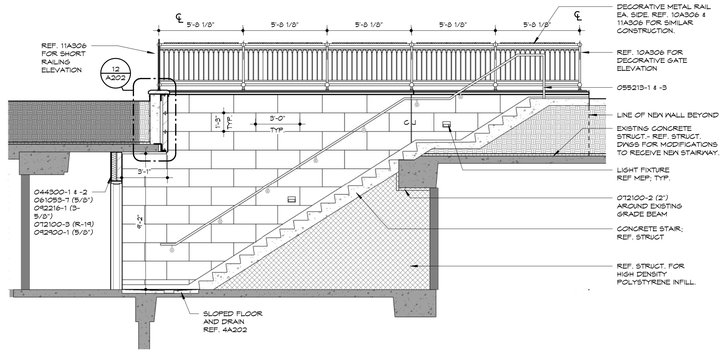

6 CAPITOL STAIR LONGITUDINAL
1/4" = 1'-0"

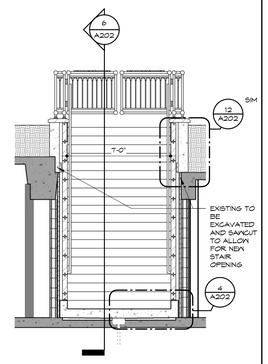

7 CAPITOL STAIR TRANSVERSE
1/4" = 1'-0"

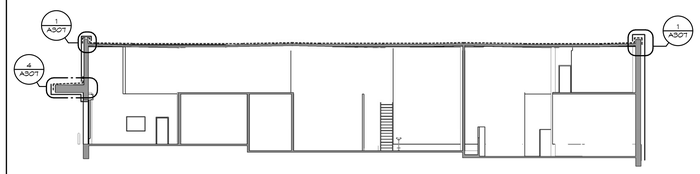

8 AIR BARRIER DIAGRAM 1 NORTH SOUTH
1/16" = 1'-0"

AIR BARRIER LEGEND
Wall Air Barrier
Roof Air Barrier

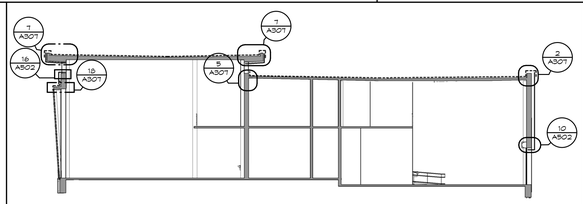

9 AIR BARRIER DIAGRAM 3 EAST WEST
1/16" = 1'-0"

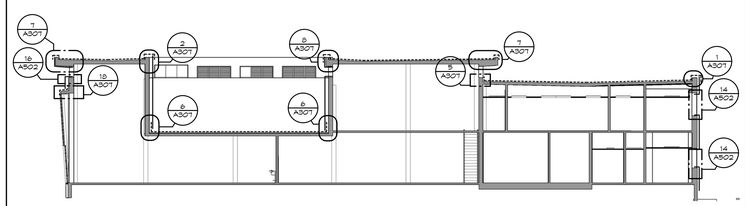

10 AIR BARRIER DIAGRAM 2 NORTH SOUTH
1/16" = 1'-0"

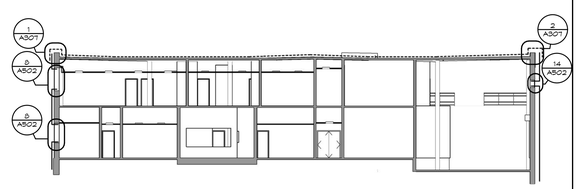

11 AIR BARRIER DIAGRAM 4 EAST WEST
1/16" = 1'-0"

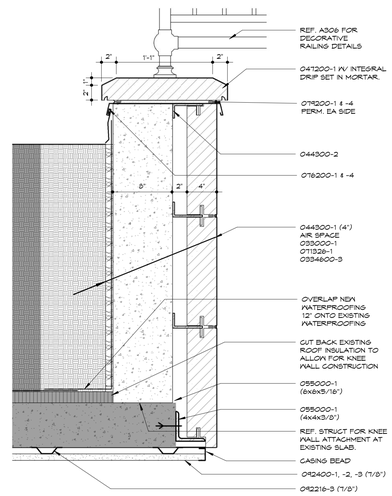

12 CAPTIAL STAIR ROOF CONNECTION
1 1/2" = 1'-0"

NOTE: REFER TO STRUCTURAL DRAWINGS FOR REINFORCING STEEL IN EXTERIOR WALLS AND CONCRETE NOT SHOWN

NOTE: REFER TO ALL DETAILS (DETAILS LOCATED ON THIS SHEET, PRECEEDING SHEETS AND FOLLOWING SHEETS) FOR APPLICABLE NOTES NOT SHOWN

NOTE: REFER TO ALL SECTIONS (SECTIONS LOCATED ON THIS SHEET, PRECEEDING SHEETS AND FOLLOWING SHEETS) FOR APPLICABLE NOTES NOT SHOWN

HTK ARCHITECTS PA
9300 W 110TH ST. STE. 150
OVERLAND PARK, KANSAS 66210
P 913.663.3373
900 S. KANSAS AVE., SUITE 200
TOPEKA KANSAS 66612
P 785.266.3373
www.htkarchitects.com

DENNIS A. HATCH LICENSED PROFESSIONAL ENGINEER 4-15-15 25621 KANSAS

DENNIS A. HATCH LICENSED PROFESSIONAL ENGINEER 4-15-15 25621 KANSAS

DATE:
- 4-15-15

REVISED DATE:
- 12-18-14
- 2-9-15
- 3-10-15

HTK PROJECT NUMBER:
- 1410.03

Department of Administration
Office of Facilities and
Procurement Management
800 SW Jackson, Suite 700
Topeka, Kansas 66612-1216
Phone: 785-296-2069
FAX: 785-296-3456

STATE OF KANSAS
STATE OF KANSAS ENERGY & SERVICE CENTER
221 SW 7th Street
BUILDING NUMBER 17300-0038

DATE: 4-15-15 DRAWN BY: Author CHECKED BY: Checker REV:

BUILDING ELEVATIONS AND SECTIONS

A-012651

A202

CONSTRUCTION DOCUMENTS

4/16/2015 11:09:37 AM C:\Users\jms\Documents\REVIT\State of Kansas Energy_Central_jms.rvt

JCSBC
2-2-2016
Att 9G--0034

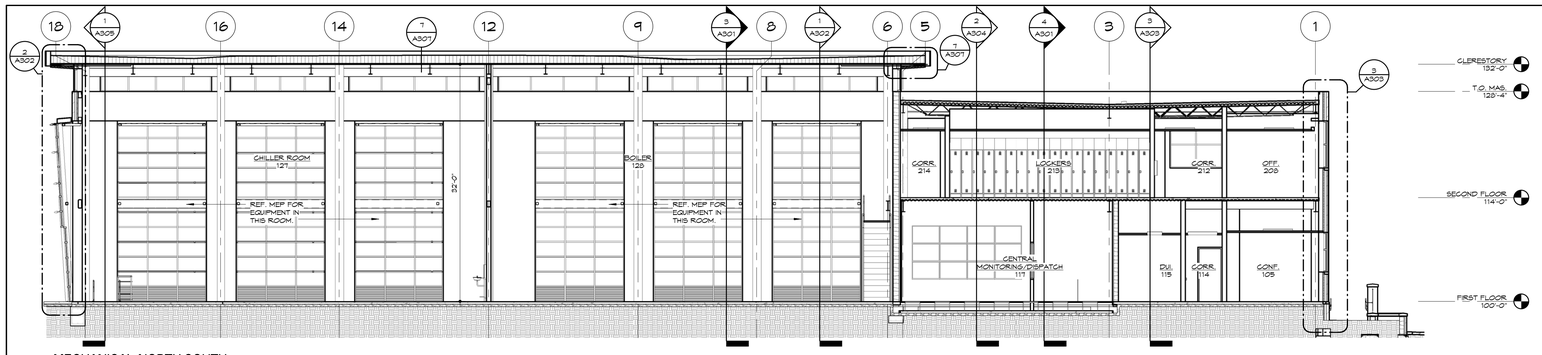

1 MECHANICAL NORTH-SOUTH

1/8" = 1'-0"

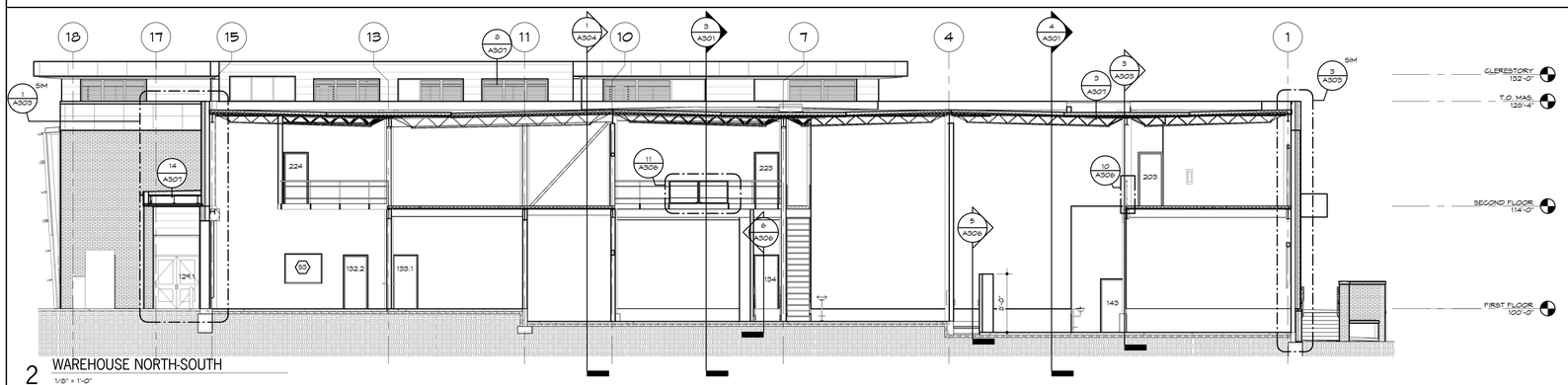

2 WAREHOUSE NORTH-SOUTH

1/8" = 1'-0"

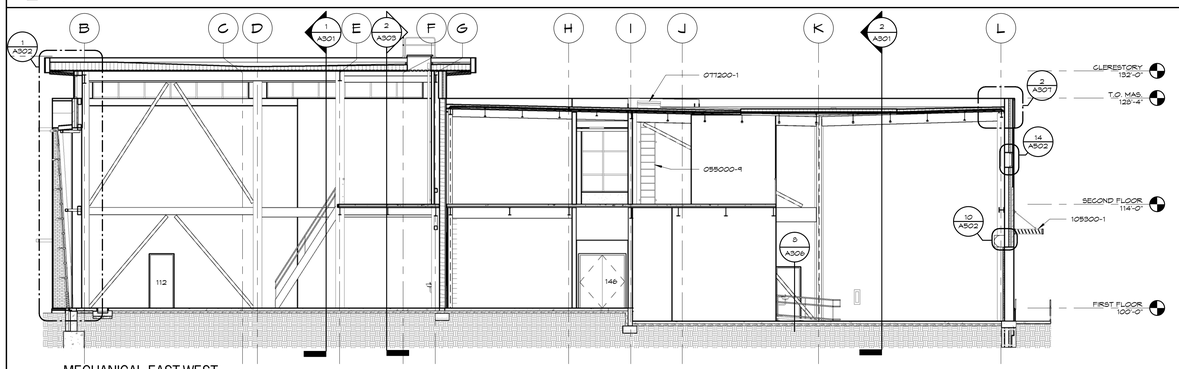

3 MECHANICAL EAST-WEST

1/8" = 1'-0"

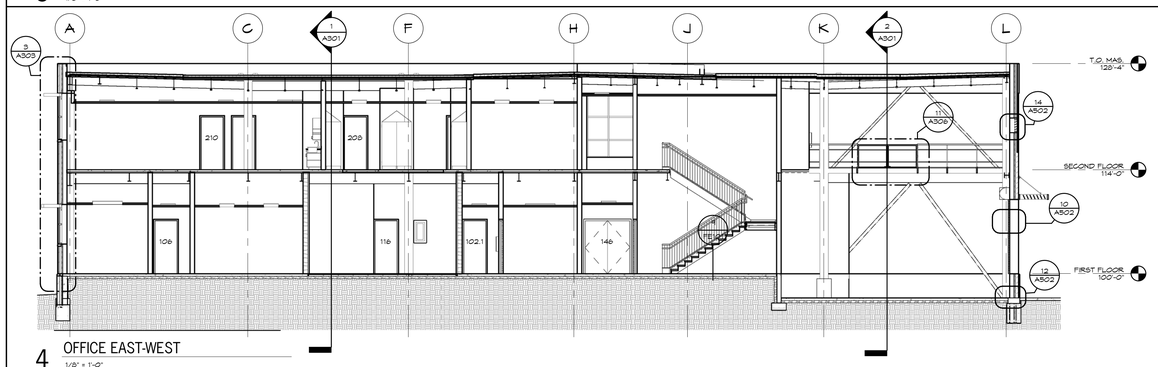

4 OFFICE EAST-WEST

1/8" = 1'-0"

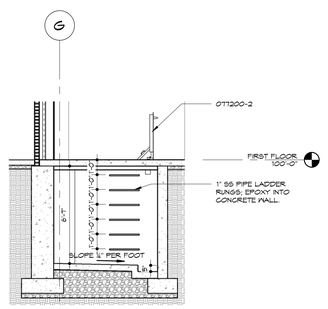

5 MECHANICAL PIT

1/4" = 1'-0"

KEYNOTES

Note: Keynotes are drawn from a master list & may not be sequentially numbered. Sizes (Ex. 2x4) or other info. following keynote on drawings indicates criteria for those materials/locations which may differ from std. material specified.

033000	-1 Concrete Structure	081113	-1 Steel Door
	-2 Concrete Floor Slab		-2 Steel Frame
	-3 Vapor Barrier		-3 Frame Anchor
	-4 Welded Wire Fabric		-4 Louver
	-5 Steel Reinforcing Bar		-5 Master Guard
	-6 Keyed Joint		-6 FIRE Door
	-7 Waterstop	081416	-1 Flush Wood Door
	-9 Dovetail Anchor	083113	-1 Access Door
	-A Sidewalk		-2 Access Door Frame
	-10 Premolded Joint Filler		-3 Floor Access Door
035300	-1 Concrete Topping	083323	-1 Overhead Coiling Door
042000	-1 Face Brick		-2 Coiling Counter Door
	-2 Concrete Masonry Unit - Normal Weight (")	083613	-1 Sectional Overhead Door
			-2 Sectional Overhead Door Track
	-3 Concrete Masonry Unit - Lightweight (")		-3 Weatherstripping
	-4 Wire Reinforcing	084113	-1 Aluminum Entrance Door
	-5 Metal Tie/Anchor		-2 Aluminum Entrance Frame
	-6 Through Wall Flashing		-3 Sunshade
	-7 Control Joint Strip		-4 Aluminum Sunsill
	-8 Bond Beam (")	084413	-1 Glazed Aluminum Curtain Wall
	-9 Compressible Filler		-2 Threshold
	-10 Weep Hole		-3 Transom Louver
	-11 Cavity Drainage Material		-4 Aluminum Sunsill
	-12 Reinforcing Bar	087100	-1 Track Hardware
044300	-1 Stone Masonry	088000	-1 Glazing (as scheduled)
	-2 Anchor	088853	-1 Security Glazing (as scheduled)
	-3 Stone Jamb		
	-4 Stone Sill		
	-5 Belt Course	089419	-1 Louvers and Vents
047200	-1 Cast Stone	092216	-1 Metal Stud (")
051200	-1 Steel Beams		-2 Steel Stud Runner (")
	-2 Steel Column		-3 Furring Channel (")
	-3 Steel Tube	092400	-1 Portland Cement Plastering
	-4 Steel Channel		-2 Metal Lath
052100	-1 Steel Joist		-3 Casing Bead
	-2 Joist - Extended End	092900	-1 Gypsum Board (")
	-3 Joist - Ceiling Extension		-2 Fire Rated Gypsum Board (")
053100	-1 Metal Decking		-3 Cementitious Tile Backer Panel
	-3 Steel Composite Decking		
	-7 Flexible Closure Strips		-4 Metal Suspension System
054000	-1 Structural Steel Studs		-5 Acoustical Sealant
	-2 Structural Steel Joists		-6 Acoustical Insulation (")
	-3 "C" Closure		-7 Metal Edge Trim
055000	-1 Steel Angle		-8 Auxiliary Support Framing
	-4 Steel Channel		-9 Metal Control Joint
	-5 Steel Lintel		-10 High Impact Gypsum Board
	-6 Steel Pipe		-11 Cementitious Exterior Finishing Composite
	-7 Steel Tube		
	-8 Steel Plate		-12 Stiffener
	-A Steel Ladder	093000	-1 Porcelain Wall Tile (" x ")
	-10 Steel Bollard		
055100	-1 Steel Stairs		-2 Shower Pan
	-2 Steel Stair Stringer		-3 Shower Pan Flashing
	-3 Steel Embed Plate		-4 Porcelain Floor Tile (" x ")
055213	-1 Steel Railings		
	-2 Steel Pipe Rail/Post		-5 Tile Base
	-3 Steel Handrail Wall Bracket		-6 Tile Cap
	-4 Steel Rod		-7 Setting Bed
055300	-1 Steel Grating		-8 Uncoupling water-proof membrane
	-2 Steel Frame		
057100	-1 Decorative Metal Railings		-9 Shower Splashguard
057500	-1 Ornamental Metal Stamped Grille		-10 Shower Niche
061053	-1 2x Wood Nailer (")	095113	-1 Acoustical Panel ("x ") (F = Fire Rated)
	-2 2x Wood Blocking (")		
	-3 1x Wood Continuous (")		-2 Ceiling Suspension System
	-4 Plywood (")		-3 Edge Wood Trim
	-5 930 Felt		-4 Auxiliary Support Framing
	-6 #15 Felt	096513	-1 Resilient Tile Flooring
	-7 Sheathing (")		-2 Resilient Wall Base
064116	-1 Interior Architectural Wood Panel		-3 Edge Strip
			-4 Resilient Matching Surface
	-2 High Pressure Laminate		-5 Resilient Stair Tread
	-3 Cabinet Liner Laminate		-6 Resilient Stair Riser
	-4 Particle Board		-7 Resilient Stringer Skirt
	-5 Plywood		-8 Resilient Stair Nose
	-6 3mm Edge Molding	096813	-1 Carpet Tile
	-7 Solid Wood Blocking	099300	-1 Access Flooring
	-8 Hardwood	099113	-1 Exterior Painting
	-9 Steel Tube/Leg Frame	099123	-1 Interior Painting
	-10 Door Hinge	099659	-1 Secondary Containment Coating System
	-11 Door/Drawer Pull		
	-12 Magnetic Catch	101400	-1 Signage
	-13 Drawer	102113	-1 Toilet Partition
	-14 Shelf Supports		-2 Urinal Screen
	-15 Countertop	102213	-1 Wire Mesh Partitions
	-16 Solid-Surfacing Material	102800	-1 Impact-Resistant Corner-guard
071113	-1 Bituminous Dampproofing	102900	-1 Tissue Dispenser
071326	-1 Self-Adhering Sheet Waterproofing		-2 Framed Mirror
			-3 Sanitary Napkin Disposer
072100	-1 Foundation Wall or Under Slab Insulation (R-)		-4 Grab Bar
			-5 Shower Seat
	-2 Cavity Wall Insulation (R-)		-6 Shower Curtain Rod
	-3 Building Insulation - Unfaced		-7 Coat/Robe Hook
			-8 Mop/Broom Holder
	-4 Building Insulation - Faced (R-)	104413	-1 Fire Extinguisher Cabinet
		104416	-1 Fire Extinguisher
	-5 Sill Sealer	105113	-1 Personnel Locker
	-6 Batting Insulation		-2 Locker
072129	-1 Fluid Applied Membrane Air Barrier		-3 Bench
		105500	-1 Pre-Manufactured Canopies
	-2 Flashing Tape		
074213	-1 Metal Wall Panel (Type 1)	107500	-1 Flagpole
	-2 Trim	108113	-1 Deterrent Spikes
	-3 Z-Furring (")	122413	-1 Roller Window Shades
	-4 Metal Wall Panel (Type 2)	135600	-1 Spray Painting Booth
	-5 Metal Soffit Panel	142400	-1 Hydraulic Elevator
075423	-1 Thermoplastic Polyolefin (TPO) Roofing	311000	-1 Site Clearing
		312000	-1 Earth Moving
	-2 Roof Insulation Flat		-2 Interior Fill
	-3 Roof Insulation Tapered		-3 Exterior Fill
	-4 Roof Expansion Joint		-4 Granular Drainage Course
	-5 Coverboard		-5 Subbase Course
	-6 Walkway Protection Board	321313	-1 Concrete Paving
076200	-1 Sheet Metal Flashing and Counterflashing	334600	-1 Perforated Wall Pipe & Fittings
	-2 Pre-Finished Roof Edge		-2 Geotextile Filter Fabric (Flat Rock)
	-3 Pre-Finished Coping		-3 Drainage Panel
	-4 Sheet Metal Reglet		
	-5 Sheet Metal Gutter		
	-6 Sheet Metal Downspout		
	-7 Sheet Metal Scupper		
077129	-1 Roof Expansion Joint		
077200	-1 Roof Hatch/Ladder		
078413	-1 Penetration Firestopping		
078443	-1 Joint Firestopping		
079200	-1 Sealant - Rake where required		
	-2 Joint Filler		
	-3 Gasket		
	-4 Backer Rod		
079500	-1 Expansion Control		

NOTE: REFER TO STRUCTURAL DRAWINGS FOR REINFORCING STEEL IN EXTERIOR WALLS AND CONCRETE NOT SHOWN

NOTE: REFER TO ALL DETAILS (DETAILS LOCATED ON THIS SHEET, PRECEEDING SHEETS AND FOLLOWING SHEETS) FOR APPLICABLE NOTES NOT SHOWN

NOTE: REFER TO ALL SECTIONS (SECTIONS LOCATED ON THIS SHEET, PRECEEDING SHEETS AND FOLLOWING SHEETS) FOR APPLICABLE NOTES NOT SHOWN

HTK ARCHITECTS PA
9300 W 110TH ST. STE. 150
OVERLAND PARK, KANSAS 66210
T 913.663.3373
F 913.663.3379
900 S. KANSAS AVE., SUITE 200
TOPEKA, KANSAS 66612
T 785.266.3373
www.htkarchitects.com

DANIEL A. HAUGHTON BLACKBURN — LICENSED ARCHITECT — 4-15-15 — 25672 — KANSAS — PROFESSIONAL ARCHITECT

DENNIS A. HAUGHTON — LICENSED ARCHITECT — 4-15-15 — 3435 — KANSAS — PROFESSIONAL ARCHITECT

DATE:
- 4-15-15

REVISED DATE:
- 12-18-14
- 2-9-15
- 3-10-15
-

HTK PROJECT NUMBER:
- 1410.03

Department of Administration
Office of Facilities and Procurement Management
800 SW Jackson, Suite 700
Topeka, Kansas 66612-1216
Phone: 785-296-0669
FAX 785-296-3456

STATE OF KANSAS
STATE OF KANSAS ENERGY & SERVICE CENTER
221 SW 7th Street
BUILDING NUMBER 17300-0038

DATE: 4-15-15 DRAWN BY: Author CHECKED BY: Checker REV:

BUILDING SECTIONS

A-012651

A301

CONSTRUCTION DOCUMENTS

4/16/2015 11:10:11 AM C:\Users\jms\Documents\REVIT\State of Kansas Energy_Central_jms.rvt

JCSBC
2-2-2016
AIL9G.--0035

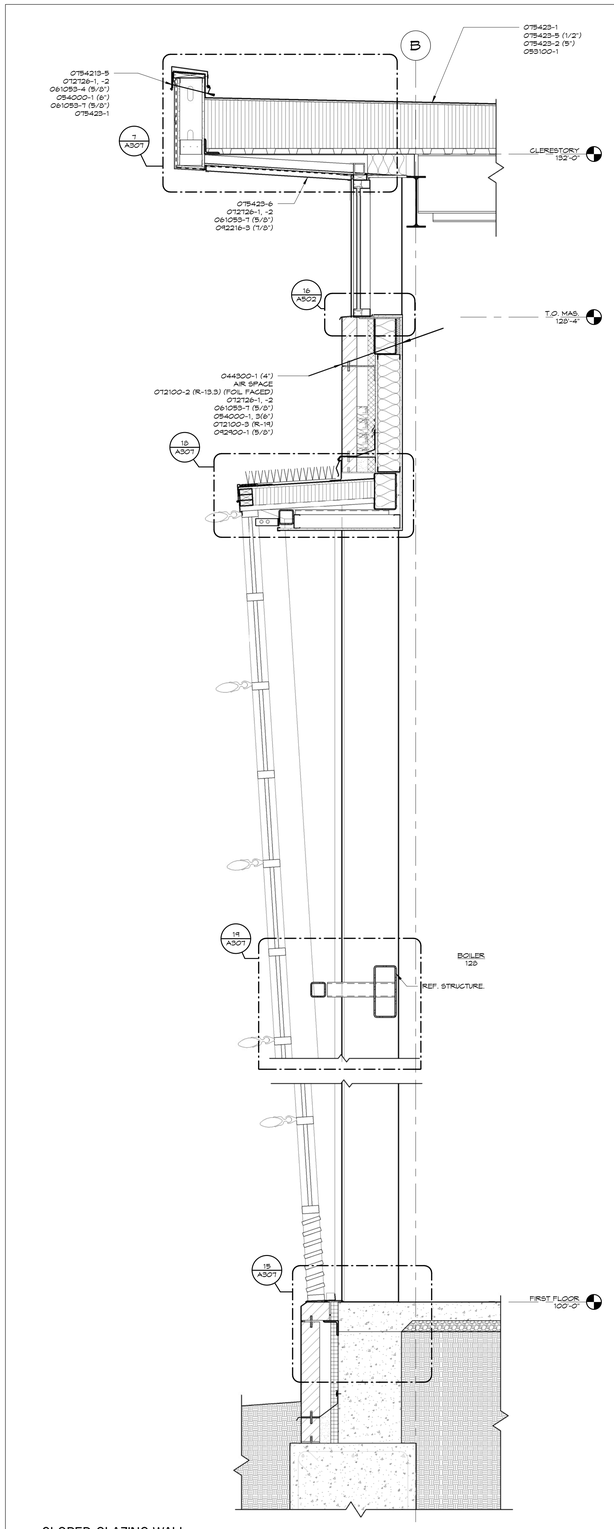

1 SLOPED GLAZING WALL

3/4" = 1'-0"

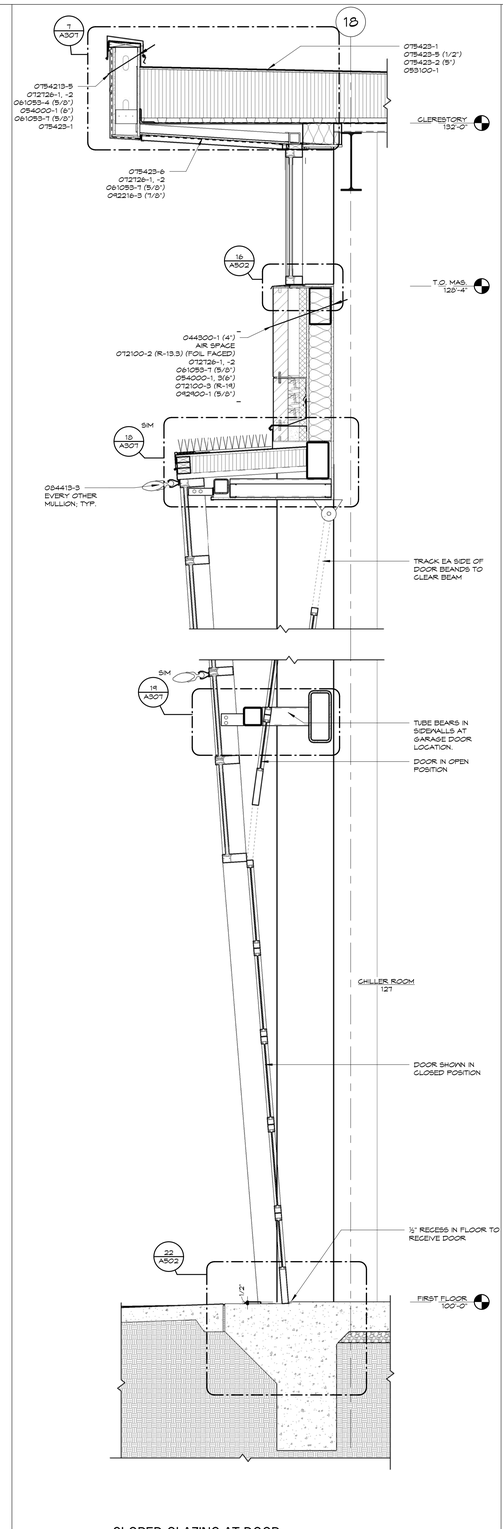

2 SLOPED GLAZING AT DOOR

3/4" = 1'-0"

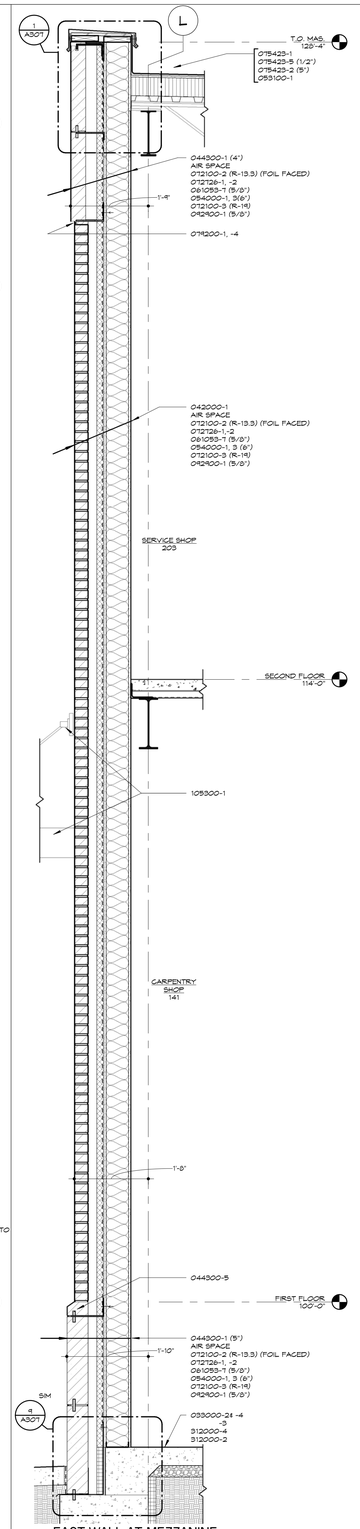

3 EAST WALL AT MEZZANINE

3/4" = 1'-0"

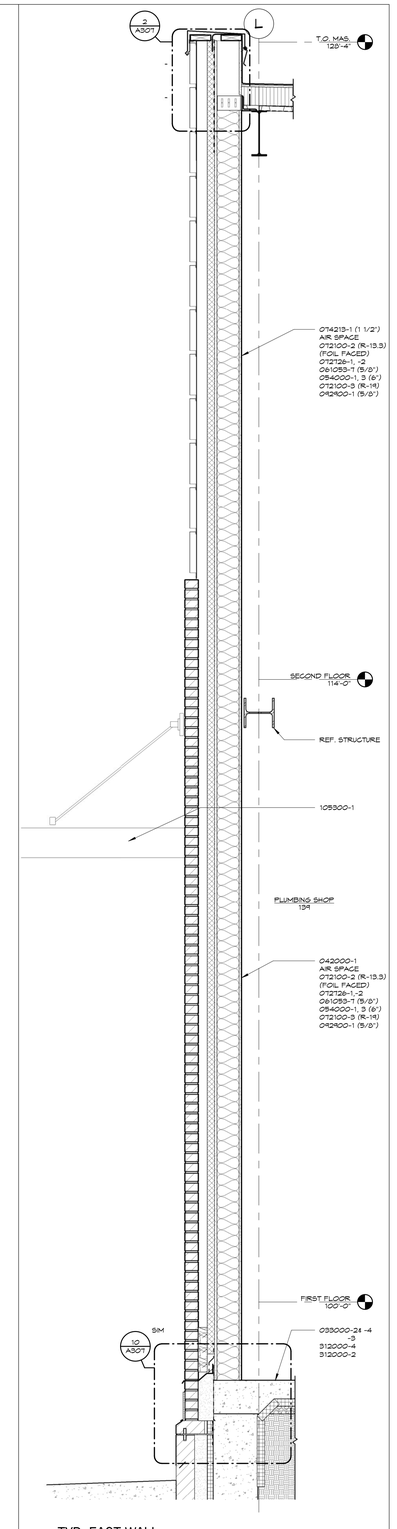

4 TYP. EAST WALL

3/4" = 1'-0"

KEYNOTES

Note: Keynotes are drawn from a master list & may not be sequentially numbered. Sizes (8x, 2x4) or other info. following keynote on drawings indicates criteria for those materials/locations which may differ from std. material specified.

033000 -1 Concrete Structure
-2 Concrete Floor Slab
-3 Vapor Barrier
-4 Welded Wire Fabric
-5 Steel Reinforcing Bar
-6 Rustication Joint
-7 Waterstop
-8 Dovetail Anchor
-9 Sidewalk
-10 Premolded Joint Filler
033500 -1 Concrete Topping
042000 -1 Face Brick
-2 Concrete Masonry Unit - Normal Height (")
-3 Concrete Masonry Unit - Lightweight (")
-4 Wire Reinforcing
-5 Metal Tie/Anchor
-6 Through Wall Flashing
-7 Control Joint Strip
-8 Bond Beam (")
-9 Compressible Filler
-10 Grout Fill
-11 Cavity Drainage Material
-12 Termination Bar
-13 Stone Masonry
044300 -1 Anchor
-2 Stone Jamb
-3 Stone Sill
-4 Belt Course
-5 Cast Stone
047200 -1 Steel Beams
051200 -1 Steel Column
-2 Steel Tube
-3 Steel Channel
-4 Steel Joist
052100 -1 Joist - Extended End
-2 Joist - Ceiling Extension
-3 Metal Decking
053100 -1 Steel Composite Decking
-2 Flexible Closure Strips
-3 Structural Steel Studs
-4 Structural Steel Joists
054000 -1 "C" Closure
-2 Steel Angle
-3 Steel Channel
-4 Steel Lintel
-5 Steel Pipe
-6 Steel Tube
-7 Steel Plate
-8 Steel Ladder
-9 Steel Bollard
-10 Steel Stairs
055100 -1 Steel Stair Stringer
-2 Steel Embed Plate
-3 Steel Pipe Handrail
-4 Steel Pipe Rail/Post
-5 Steel Handrail Wall Bracket
-6 Steel Rod
-7 Steel Grating
-8 Steel Frame
055300 -1 Decorative Metal Railings
057500 -1 Ornamental Metal Stamped Grille
061053 -1 2x Wood Nailer (")
-2 2x Wood Blocking (")
-3 1x Wood Continuous (")
-4 Plywood (")
-5 930 Felt
-6 #15 Felt
-7 Sheathing (")
-8 Miscellaneous Architectural Millwork
-9 High Pressure Laminate
-10 Cabinet Liner Laminate
-11 Particle Board
-12 Plywood
-13 3mm Edge Molding
-14 Solid Wood Blocking
-15 Hardwood
-16 Steel Tube/Leg Frame
-17 Door Hinge
-18 Door/Drawer Pull
-19 Magnetic Catch
-20 Drawer
-21 Shelf Supports
-22 Countertop
-23 Solid-Surfacing Material
071113 -1 Bituminous Dampproofing
071326 -1 Self-Adhering Sheet Waterproofing
072100 -1 Foundation Wall or Under Slab Insulation (R-)
-2 Cavity Wall Insulation (R-)
-3 Building Insulation - Unfaced (R-)
-4 Building Insulation - Faced (R-)
-5 Sill Sealer
-6 Batting Insulation
072126 -1 Fluid Applied Membrane Air Barrier
-2 Flashing Tape
074213 -1 Metal Wall Panel (Type 1)
-2 Trim
-3 Z-Furring (")
-4 Metal Wall Panel (Type 2)
-5 Metal Soffit Panel
074233 -1 Thermoplastic Polyolefin (TPO) Roofing
-2 Roof Insulation Tapered
-3 Roof Insulation Tapered
-4 Roof Expansion Joint
-5 Coverboard
-6 Walkway Protection Board
076200 -1 Sheet Metal Flashing and Counterflashing
-2 Pre-Finished Roof Edge
-3 Pre-Finished Coping
-4 Sheet Metal Reglet
-5 Sheet Metal Gutter
-6 Sheet Metal Downspout
-7 Sheet Metal Scupper
077126 -1 Roof Expansion Joint
077200 -1 Roof Hatch-Ladder
078413 -1 Penetration Firestopping
078443 -1 Joint Firestopping
079200 -1 Sealant - Rake where required
-2 Joint Filler
-3 Backer
-4 Backer Rod
079500 -1 Expansion Control
081113 -1 Steel Door
-2 Steel Frame
-3 Frame Anchor
-4 Louver
-5 Master Guard
-6 FRP Door
081416 -1 Flush Wood Door
083113 -1 Access Door
-2 Access Door Frame
-3 Floor Access Door
083323 -1 Overhead Coiling Door
-2 Coiling Counter Door
083613 -1 Sectional Overhead Door
-2 Sectional Overhead Door Track
-3 Weatherstripping
084113 -1 Aluminum Entrance Door
-2 Aluminum Entrance Frame
-3 Sunshade
-4 Aluminum Sunsill
084413 -1 Glazed Aluminum Curtain Wall
-2 Thru-Wall
-3 Sunshade Louver
-4 Aluminum Sunsill
087100 -1 Track Hardware
088000 -1 Glazing (as scheduled)
088889 -1 Security Glazing (as scheduled)
089116 -1 Louvers and Vents
092216 -1 Steel Stud (")
-2 Steel Stud Runner (")
-3 Furring Channel (")
092400 -1 Portland Cement Plastering
-2 Metal Lath
-3 Casing Bead
092900 -1 Gypsum Board (")
-2 Fire Rated Gypsum Board (")
-3 Cementitious Tile Backer Panel
-4 Metal Suspension System
-5 Acoustical Sealant
-6 Acoustical Insulation (")
-7 Metal Edge Trim
-8 Auxiliary Support Framing
-9 Metal Control Joint
-10 High Impact Gypsum Board
-11 Non-Loadbearing Interior Framing
-12 Stiffener
093000 -1 Porcelain Wall Tile (" x ")
-2 Shower Pan
-3 Shower Pan Flashing
-4 Porcelain Floor Tile (" x ")
-5 Tile Base
-6 Tile Cap
-7 Setting Bed
-8 Uncoupling water-proof membrane
-9 Shower Splashguard
-10 Shower Niche
095113 -1 Acoustical Panel (x ") (F + Fire Rated)
-2 Ceiling Suspension System
-3 Edge Mold Trim
-4 Auxiliary Support Framing
096513 -1 Resilient Tile Flooring
-2 Resilient Wall Base
-3 Tack Strip
-4 Tapered Feathering Surface
-5 Resilient Stair Tread
-6 Resilient Stair Riser
-7 Resilient Stringer Skirt
-8 Resilient Stair Nose
096813 -1 Carpet Tile
096900 -1 Access Flooring
099113 -1 Exterior Painting
099123 -1 Interior Painting
099605 -1 Secondary Containment Coating System
101400 -1 Signage
102113 -1 Toilet Partition
-2 Urinal Screen
102213 -1 Wire Mesh Partitions
102600 -1 Impact-Resistant Cornerguard
102800 -1 Tissue Dispenser
-2 Framed Mirror
-3 Sanitary Napkin Disposer
-4 Grab Bar
-5 Shower Seat
-6 Shower Curtain Rod
-7 Soap Holder/Dish
-8 Toilet Accessories
104413 -1 Fire Extinguisher Cabinet
104416 -1 Fire Extinguisher
105113 -1 Personnel Locker
-2 Locker
-3 Bench
105500 -1 Pre-Manufactured Canopies
107500 -1 Flagpole
108113 -1 Deterrent Spikes
122413 -1 Roller Window Shades
139600 -1 Spray Painting Booth
142400 -1 Hydraulic Elevator
312000 -1 Site Clearing
-2 Earth Moving
-3 Interior Fill
-4 Exterior Fill
-5 Granular Drainage Course
-6 Subbase Course
321313 -1 Concrete Paving
334600 -1 Perforated Wall Pipe 4 Fittings
-2 Geotextile Filter Fabric (Flat Stock)
-3 Drainage Panel

NOTE: REFER TO STRUCTURAL DRAWINGS FOR REINFORCING STEEL IN EXTERIOR WALLS AND CONCRETE NOT SHOWN

NOTE: REFER TO ALL DETAILS (DETAILS LOCATED ON THIS SHEET, PRECEEDING SHEETS AND FOLLOWING SHEETS) FOR APPLICABLE NOTES NOT SHOWN

NOTE: REFER TO ALL SECTIONS (SECTIONS LOCATED ON THIS SHEET, PRECEEDING SHEETS AND FOLLOWING SHEETS) FOR APPLICABLE NOTES NOT SHOWN

HTK ARCHITECTS PA
9300 W 110TH ST. STE. 150
OVERLAND PARK, KANSAS 66210
T 913.663.3373
900 S. KANSAS AVE., SUITE 200
TOPEKA, KANSAS 66612
T 785.266.3373
www.htkarchitects.com

DATE:
- 4-15-15

REVISED DATE:
- 12-18-14
- 2-9-15
- 3-10-15
-

HTK PROJECT NUMBER:
- 1410.03

Department of Administration
Office of Facilities and
Procurement Management
800 SW Jackson, Suite 700
Topeka, Kansas 66612-1216
Phone: 785-296-0369
FAX 785-296-3456

STATE OF KANSAS
STATE OF KANSAS ENERGY & SERVICE CENTER
221 SW 7th Street
BUILDING NUMBER 173000038

DATE: 4-15-15 DRAWN BY: Author CHECKED BY: Checker REV:

WALL SECTIONS

A-012651

A302

CONSTRUCTION DOCUMENTS

4/16/2015 11:10:17 AM C:\Users\jms\Documents\REVIT\State of Kansas Energy_Central_jms.rvt

JCSBC
2-2-2016
AttL9G.--0036

4/16/2015 11:10:22 AM C:\Users\jms\Documents\REVIT\State of Kansas Energy_Central_jms.rvt

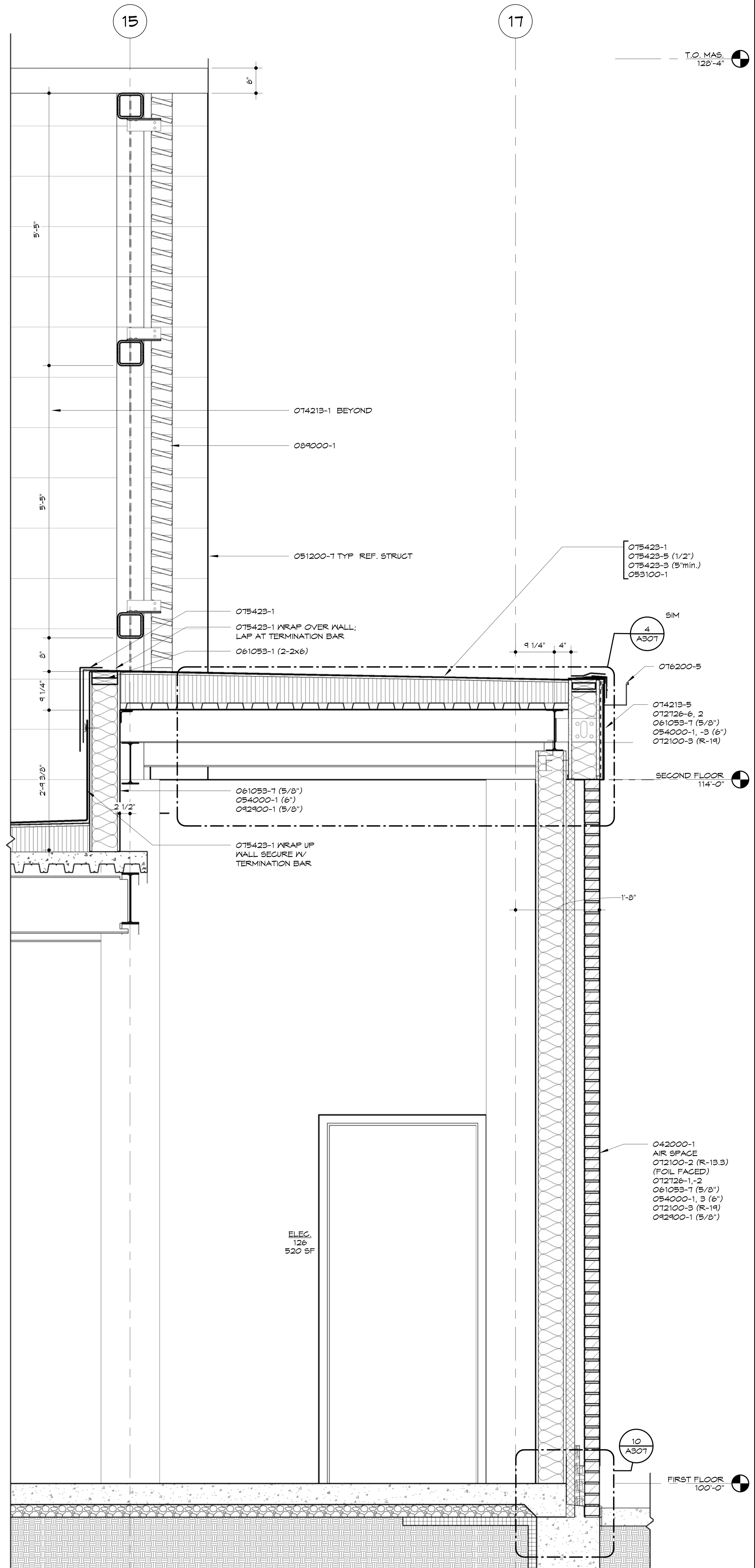

1 WALL AT MECHANICAL ROOF
3/4" = 1'-0"

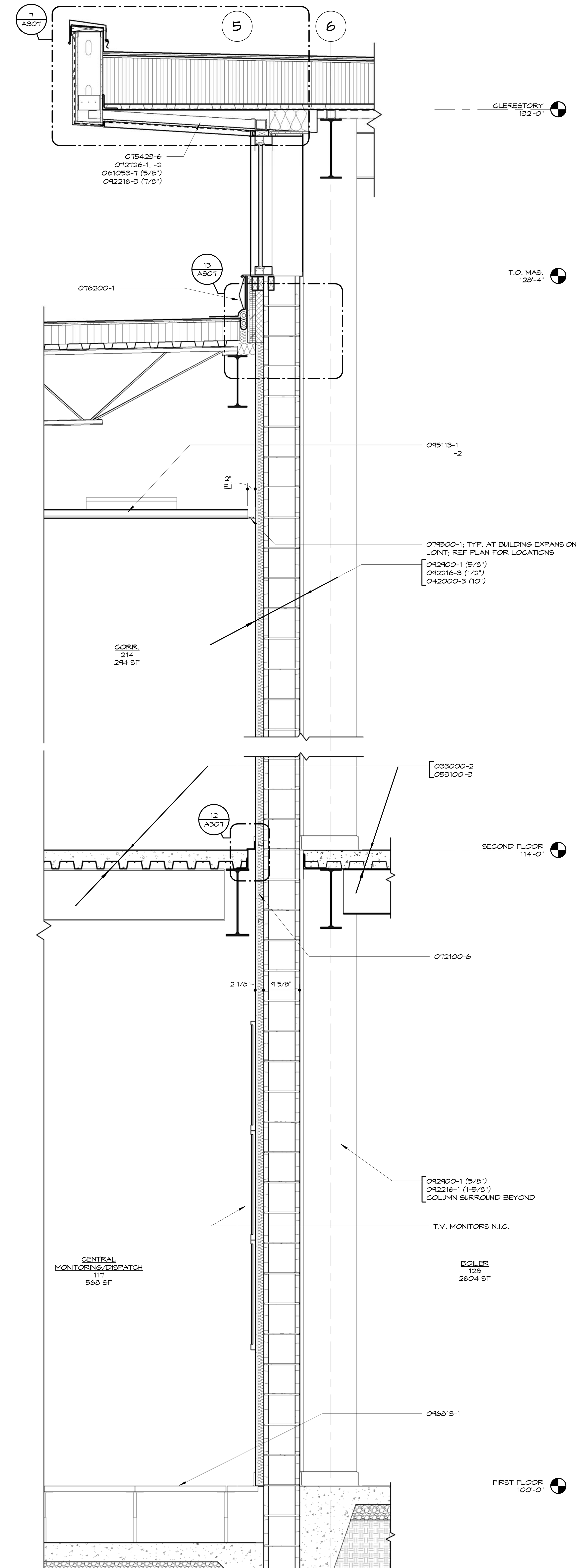

2 MEZZANINE AT MECHANICAL ROOMS
3/4" = 1'-0"

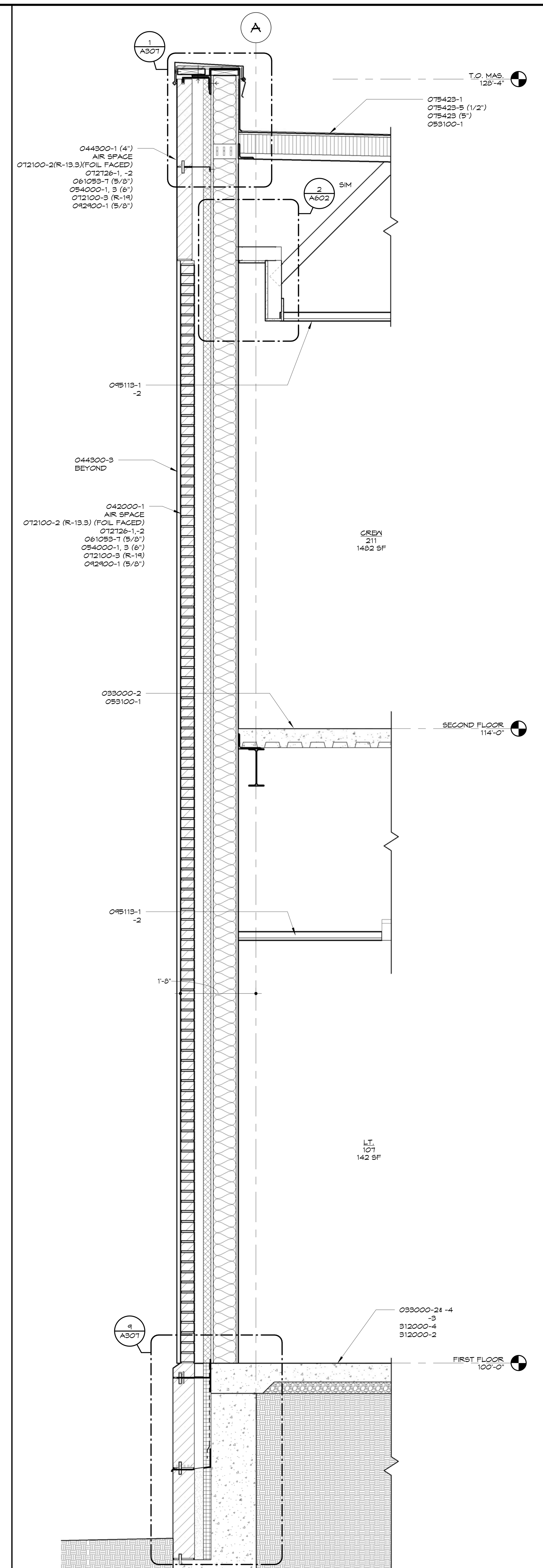

3 TYP. WEST AND NORTH WALL
3/4" = 1'-0"

KEYNOTES

Note: Keynotes are drawn from a master list & may not be sequentially numbered. Sizes (Ex: 2x4) or other info. following keynote on drawings indicates criteria for those materials/locations which may differ from std. material specified.

033000 -1 Concrete Structure
-2 Concrete Floor Slab
-3 Vapor Barrier
-4 Welded Wire Fabric
-5 Steel Reinforcing Bar
-6 Rustication Joint
-7 Waterstop
-8 Dovetail Anchor
-9 Sidewalk
-10 Premolded Joint Filler
035300 -1 Concrete Topping
042000 -1 Face Brick
-2 Concrete Masonry Unit - Normal Weight (")
-3 Concrete Masonry Unit - Lightweight (")
-4 Wire Reinforcing
-5 Metal Tie/Anchor
-6 Through Wall Flashing
-7 Control Joint Strip
-8 Bond Beam (")
-9 Compressible Filler
-10 Weep Hole
-11 Cavity Drainage Material
-12 Termination Bar
044300 -1 Stone Masonry
-2 Anchor
-3 Stone Jamb
-4 Stone Sill
-5 Belt Course
047200 -1 Cast Stone
051200 -1 Steel Beams
-2 Steel Column
-3 Steel Tube
-4 Steel Channel
052100 -1 Steel Joist
-2 Joist - Extended End
-3 Joist - Ceiling Extension
053100 -1 Metal Decking
-3 Steel Composite Decking
-2 Flexible Closure Strips
054000 -1 Structural Steel Studs
-2 Structural Steel Joists
-3 "C" Closure
055000 -1 Steel Angle
-4 Steel Channel
-5 Steel Lintel
-6 Steel Pipe
-7 Steel Tube
-8 Steel Plate
-9 Steel Ladder
-10 Steel Bollard
055100 -1 Steel Stairs
-2 Steel Stair Stringer
-3 Steel Embed Plate
055213 -1 Steel Pipe Handrail
-2 Steel Pipe Rail/Post
-3 Steel Handrail Wall Bracket
-4 Steel Rod
055300 -1 Steel Grating
-2 Steel Frame
057300 -1 Decorative Metal Railings
057500 -1 Ornamental Metal Stamped Grille
061053 -1 2x Wood Nailer (")
-2 2x Wood Blocking (")
-3 1x Wood Continuous (")
-4 Plywood (")
-5 #30 Felt
-6 #15 Felt
-7 Sheathing (")
064116 -1 Interior Architectural Woodwork
-2 High Pressure Laminate
-3 Cabinet Liner Laminate
-4 Particle Board
-5 Plywood
-6 3mm Edge Molding
-7 Solid Wood Blocking
-8 Hardwood
-9 Steel Tube/Leg Frame
-10 Door Hinge
-11 Door/Drawer Pull
-12 Magnetic Catch
-13 Drawer
-14 Shelf Supports
-15 Countertop
-16 Solid-Surfacing Material
071113 -1 Bituminous Dampproofing
071326 -1 Self-Adhering Sheet Waterproofing
072100 -1 Foundation Wall or Under Slab Insulation (R-)
-2 Cavity Wall Insulation (R-)
-3 Building Insulation - Unfaced (R-)
-4 Building Insulation - Faced (R-)
-5 Sill Sealer
-6 Safing Insulation
072726 -1 Fluid Applied Membrane Air Barrier
-2 Flashing Tape
074213 -1 Metal Wall Panel (Type 1)
-2 Trim
-3 Z-Furring (")
-4 Metal Wall Panel (Type 2)
-5 Metal Soffit Panel
075423 -1 Thermoplastic Polyolefin (TPO) Roofing
-2 Roof Insulation Flat
-3 Roof Insulation Tapered
-4 Roof Expansion Joint
-5 Coverboard
-6 Walkway Protection Board
076200 -1 Sheet Metal Flashing and Counterflashing
-2 Pre-finished Roof Edge
-3 Pre-finished Coping
-4 Sheet Metal Reglet
-5 Sheet Metal Gutter
-6 Sheet Metal Downspout
-7 Sheet Metal Scupper
077129 -1 Roof Expansion Joint
077200 -1 Roof Hatch/Ladder
078413 -1 Penetration Firestopping
078443 -1 Joint Firestopping
079200 -1 Sealant - Rake where required
-2 Joint Filler
-3 Gasket
-4 Backer Rod
079500 -1 Expansion Control
081113 -1 Steel Door
-2 Steel Frame
-3 Frame Anchor
-4 Louver
-5 Plaster Guard
-6 FPR Door
081416 -1 Flush Wood Door
083113 -1 Access Door
-2 Access Door Frame
-3 Floor Access Door
083323 -1 Overhead Coiling Door
-2 Coiling Counter Door
083613 -1 Sectional Overhead Door
-2 Sectional Overhead Door Track
-3 Weatherstripping
084113 -1 Aluminum Entrance Door
-2 Aluminum Entrance Frame
-3 Sunshade
-4 Aluminum Subsill
084413 -1 Glazed Aluminum Curtain Wall
-2 Threshold
-3 Sunshade Louver
-4 Aluminum Subsill
087100 -1 Track Hardware
088000 -1 Glazing (as scheduled)
088853 -1 Securtiy Glazing (as scheduled)
089119 -1 Louvers and Vents
092216 -1 Steel Stud (")
-2 Steel Stud Runner (")
-3 Furring Channel (")
092400 -1 Portland Cement Plastering
-2 Metal Lath
-3 Casing Bead
092900 -1 Gypsum Board (")
-2 Fire Rated Gypsum Board (")
-3 Cementitious Tile Backer Panel
-4 Metal Suspension System
-5 Acoustical Sealant
-6 Acoustical Insulation (")
-7 Metal Edge Trim
-8 Auxiliary Support Framing
-9 Metal Control Joint
-10 High Impact Gypsum Board
-11 Concrete Interior Finishing Compound
-12 Stiffener
093000 -1 Porcelain Wall Tile (" x ")
-2 Shower Pan
-3 Shower Pan Flashing
-4 Porcelain Floor Tile (" x ")
-5 Tile Base
-6 Tile Cap
-7 Setting Bed
-8 Uncoupling water-proof membrane
-9 Shower Splashguard
-10 Shower Niche
095113 -1 Acoustical Panel ('x ') (F = Fire Rated)
-2 Ceiling Suspension System
-3 Edge Mold Trim
-4 Auxiliary Support Framing
096513 -1 Resilient Tile Flooring
-2 Resilient Wall Base
-3 Edge Strip
-4 Tactile Warning Surface
-5 Resilient Stair Tread
-6 Resilient Stair Riser
-7 Resilient Stringer Skirt
-8 Resilient STair Nose
096813 -1 Carpet Tile
096900 -1 Access Flooring
099113 -1 Exterior Painting
099123 -1 Interior Painting
099635 -1 Secondary Containment Coating System
101400 -1 Signage
102113 -1 Toilet Partition
-2 Urinal Screen
102213 -1 Wire Mesh Partitions
102600 -1 Impact-Resistant Cornerguard
102800 -1 Tissue Dispenser
-2 Framed Mirror
-3 Sanitary Napkin Disposer
-4 Grab Bar
-5 Shower Seat
-6 Shower Curtain Rod
-7 Coat/Robe Hook
-8 Shower Curtain
104413 -1 Fire Extinguisher Cabinet
104416 -1 Fire Extinguisher
105113 -1 Personnel Locker
-2 Locker
-3 Bench
105300 -1 Pre- Manufactured Canopies
107500 -1 Flagpole
108113 -1 Deterrent Spikes
122413 -1 Roller Window Shades
133600 -1 Spray Painting Booth
142400 -1 Hydraulic Elevator
311000 -1 Site Clearing
312000 -1 Earth Moving
-2 Interior Fill
-3 Exterior Fill
-4 Granular Drainage Course
-5 Subbase Course
321313 -1 Concrete Paving
334600 -1 Perforated Wall Pipe & Fittings
-2 Geotextile Filter Fabric (Flat/Sock)
-3 Drainage Panel

NOTE: REFER TO STRUCTURAL DRAWINGS FOR REINFORCING STEEL IN EXTERIOR WALLS AND CONCRETE NOT SHOWN

NOTE: REFER TO ALL DETAILS (DETAILS LOCATED ON THIS SHEET, PRECEEDING SHEETS AND FOLLOWING SHEETS) FOR APPLICABLE NOTES NOT SHOWN

NOTE: REFER TO ALL SECTIONS (SECTIONS LOCATED ON THIS SHEET, PRECEEDING SHEETS AND FOLLOWING SHEETS) FOR APPLICABLE NOTES NOT SHOWN

HTK ARCHITECTS PA
900 S. KANSAS AVE., SUITE 200
TOPEKA KANSAS 66612
P 785.266.5373
9300 W 110TH ST. STE. 150
OVERLAND PARK, KANSAS 66210
P 913.663.5373
www.htkarchitects.com

R. KEITH BLACKBURN LICENSED 3435 4-15-15 KANSAS PROFESSIONAL ARCHITECT

DENNIS A. HAUGH LICENSED 4-15-15 2567 KANSAS PROFESSIONAL ARCHITECT

DATE:
- 4-15-15

REVISED DATE:
- 12-18-14
- 2-9-15
- 3-10-15
-

HTK PROJECT NUMBER:
- 1410.03

Department of Administration
Office of Facilities and Procurement Management
800 SW Jackson, Suite 700
Topeka, Kansas 66612-1216
Phone 785-296-8899
FAX 785-296-3456

STATE OF KANSAS
STATE OF KANSAS ENERGY & SERVICE CENTER
221 SW 7th Street
BUILDING NUMBER 17300-0038
DATE: 4-15-15 DRAWN BY: Author CHECKED BY: Checker REV:

WALL SECTIONS

A-012651

A303

CONSTRUCTION DOCUMENTS

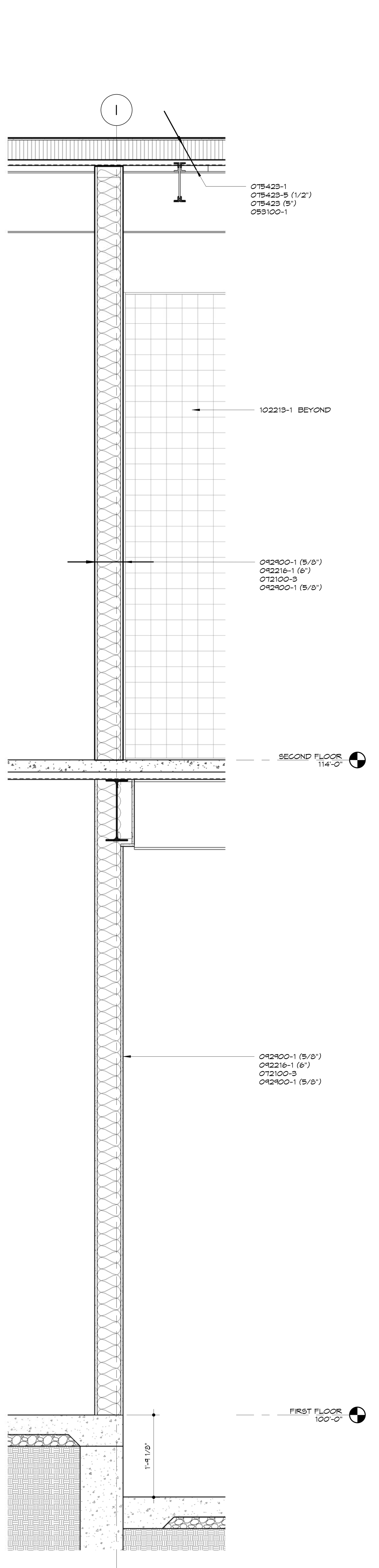

1 CORRIDOR WALL
3/4" = 1'-0"

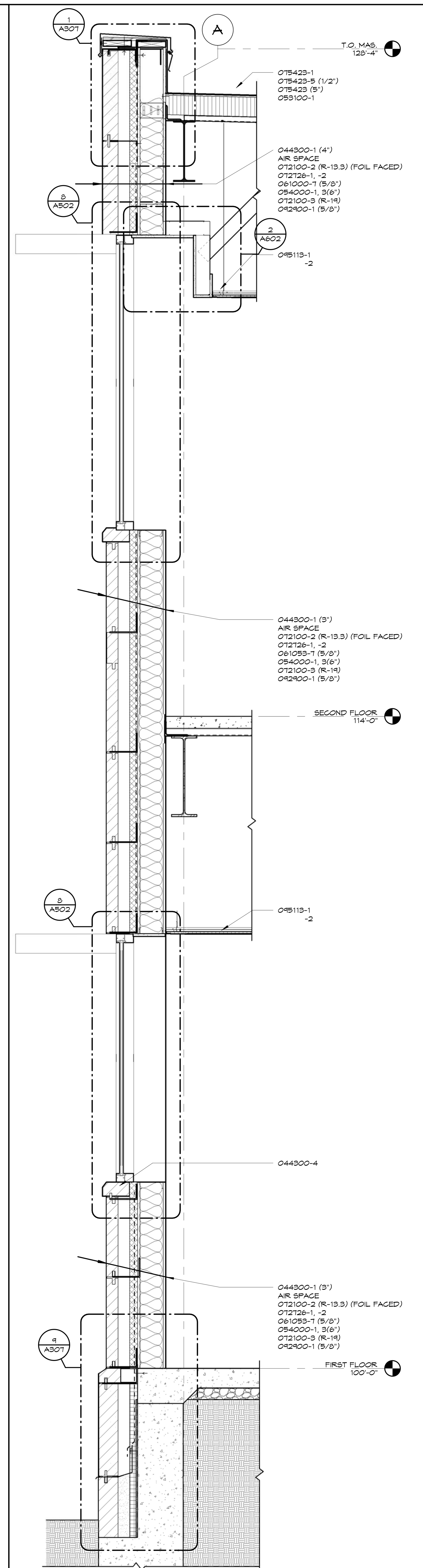

2 WINDOWS AT OFFICE AREA
3/4" = 1'-0"

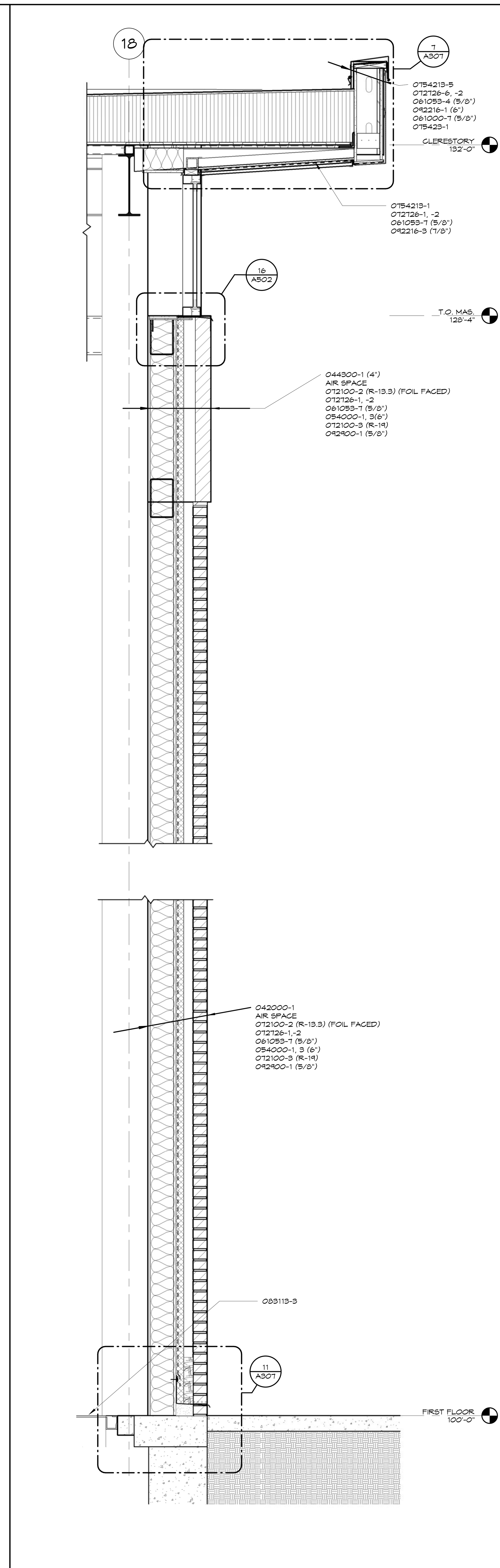

3 BRICK WALL AT CHILLER ROOM
3/4" = 1'-0"

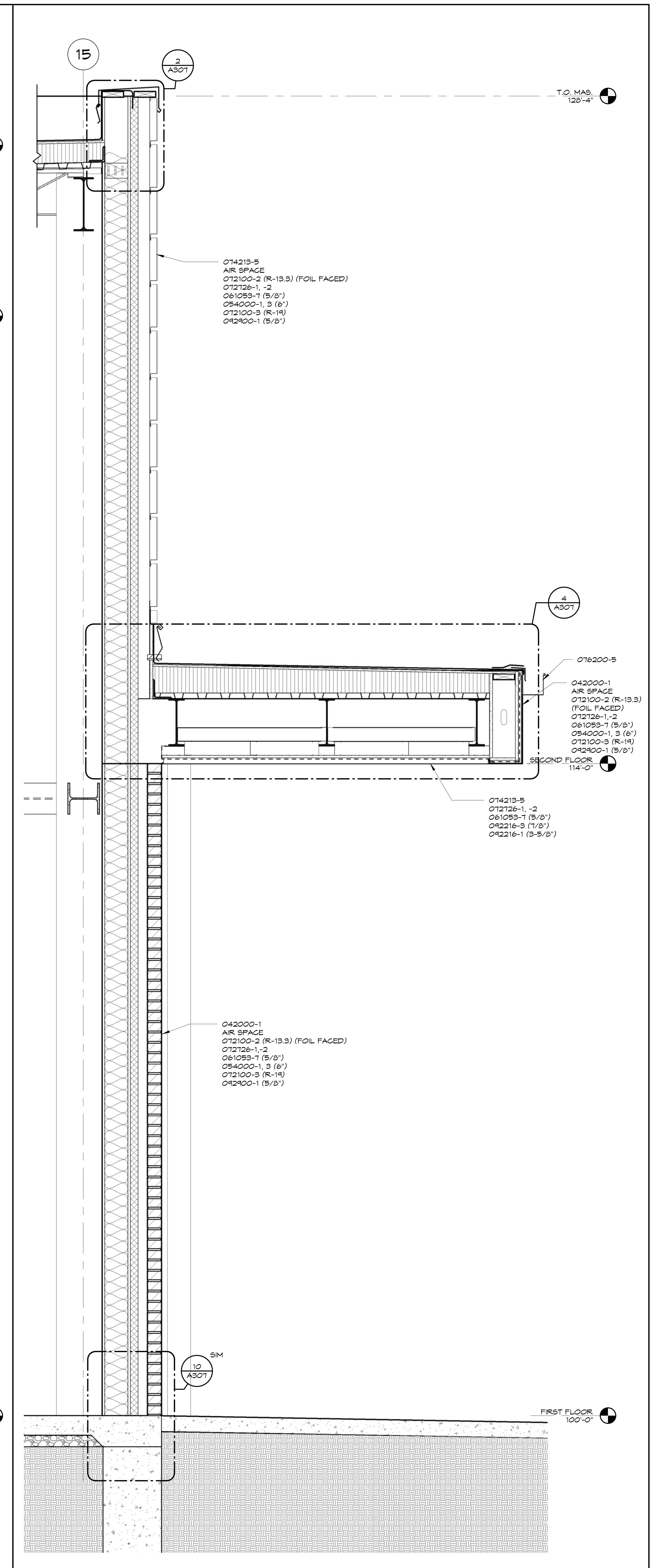

4 TYP. SOUTH WALL
3/4" = 1'-0"

KEYNOTES

Note: Keynotes are drawn from a master list & may not be sequentially numbered. Sizes (Ex: 2x4) or other info. following keynote on drawings indicates criteria for those materials/locations which may differ from std. material specified.

033000	-1	Concrete Structure
	-2	Concrete Floor Slab
	-3	Vapor Barrier
	-4	Welded Wire Fabric
	-5	Steel Reinforcing Bar
	-6	Rustication Joint
	-7	Waterstop
	-8	Dovetail Anchor
	-9	Sidewalk
	-10	Premolded Joint Filler
035300	-1	Concrete Topping
042000	-1	Face Brick
	-2	Concrete Masonry Unit - Normal Weight (")
	-3	Concrete Masonry Unit - Lightweight (")
	-4	Wire Reinforcing
	-5	Metal Tie/Anchor
	-6	Through Wall Flashing
	-7	Control Joint Strip
	-8	Bond Beam (")
	-9	Compressible Filler
	-10	Weep Hole
	-11	Cavity Drainage Material
	-12	Termination Bar
044300	-1	Stone Masonry
	-2	Anchor
	-3	Stone Jamb
	-4	Stone Sill
	-5	Belt Course
047200	-1	Cast Stone
051200	-1	Steel Beams
	-2	Steel Column
	-3	Steel Tube
	-4	Steel Channel
052100	-1	Steel Joist
	-2	Joist - Extended End
	-3	Joist - Ceiling Extension
053100	-1	Metal Decking
	-3	Steel Composite Decking
	-2	Flexible Closure Strips
054000	-1	Structural Steel Studs
	-2	Structural Steel Joists
	-3	"C" Closure
055000	-1	Steel Angle
	-4	Steel Channel
	-5	Steel Lintel
	-6	Steel Pipe
	-7	Steel Tube
	-8	Steel Plate
	-9	Steel Ladder
	-10	Steel Bollard
055100	-1	Steel Stairs
	-2	Steel Stair Stringer
	-3	Steel Embed Plate
055213	-1	Steel Pipe Handrail
	-2	Steel Pipe Rail/Post
	-3	Steel Handrail Wall Bracket
	-4	Steel Rod
055300	-1	Steel Grating
	-2	Steel Frame
057300	-1	Decorative Metal Railings
057500	-1	Ornamental Metal Stamped Grille
061053	-1	2x Wood Nailer (")
	-2	2x Wood Blocking (")
	-3	1x Wood Continuous (")
	-4	Plywood (")
	-5	#30 Felt
	-6	#15 Felt
	-7	Sheathing (")
064116	-1	Interior Architectural Woodwork
	-2	High Pressure Laminate
	-3	Cabinet Liner Laminate
	-4	Particle Board
	-5	Plywood
	-6	3mm Edge Molding
	-7	Solid Wood Blocking
	-8	Hardwood
	-9	Steel Tube/Leg Frame
	-10	Door Hinge
	-11	Door/Drawer Pull
	-12	Magnetic Catch
	-13	Drawer
	-14	Shelf Supports
	-15	Countertop
	-16	Solid-Surfacing Material
071113	-1	Bituminous Dampproofing
071326	-1	Self-Adhering Sheet Waterproofing
072100	-1	Foundation Wall or Under Slab Insulation (R-)
	-2	Cavity Wall Insulation (R-)
	-3	Building Insulation - Unfaced (R-)
	-4	Building Insulation - Faced (R-)
	-5	Sill Sealer
	-6	Safing Insulation
072726	-1	Fluid Applied Membrane Air Barrier
	-2	Flashing Tape
074213	-1	Metal Wall Panel (Type 1)
	-2	Trim
	-3	Z-Furring (")
	-4	Metal Wall Panel (Type 2)
	-5	Metal Soffit Panel
075423	-1	Thermoplastic Polyolefin (TPO) Roofing
	-2	Roof Insulation Flat
	-3	Roof Insulation Tapered
	-4	Roof Expansion Joint
	-5	Coverboard
	-6	Walkway Protection Board
076200	-1	Sheet Metal Flashing and Counterflashing
	-2	Pre-Finished Roof Edge
	-3	Pre-Finished Coping
	-4	Sheet Metal Reglet
	-5	Sheet Metal Gutter
	-6	Sheet Metal Downspout
	-7	Sheet Metal Scupper
077129	-1	Roof Expansion Joint
077200	-1	Roof Hatch/Ladder
078413	-1	Penetration Firestopping
078443	-1	Joint Firestopping
079200	-1	Sealant - Rake where required
	-2	Joint Filler
	-3	Gasket
	-4	Backer Rod
079500	-1	Expansion Control

081113	-1	Steel Door
	-2	Steel Frame
	-3	Frame Anchor
	-4	Louver
	-5	Plaster Guard
	-6	FPR Door
081416	-1	Flush Wood Door
083113	-1	Access Door
	-2	Access Door Frame
	-3	Floor Access Door
083323	-1	Overhead Coiling Door
	-2	Coiling Counter Door
083613	-1	Sectional Overhead Door
	-2	Sectional Overhead Door Track
	-3	Weatherstripping
084113	-1	Aluminum Entrance Door
	-2	Aluminum Entrance Frame
	-3	Sunshade
	-4	Aluminum Subsill
084413	-1	Glazed Aluminum Curtain Wall
	-2	Threshold
	-3	Sunshade Louver
	-4	Aluminum Subsill
087100	-1	Track Hardware
088000	-1	Glazing (as scheduled)
088853	-1	Securtiy Glazing (as scheduled)
089119	-1	Louvers and Vents
092216	-1	Steel Stud (")
	-2	Steel Stud Runner (")
	-3	Furring Channel (")
092400	-1	Portland Cement Plastering
	-2	Metal Lath
	-3	Casing Bead
092900	-1	Gypsum Board (")
	-2	Fire Rated Gypsum Board (")
	-3	Cementitious Tile Backer Panel
	-4	Metal Suspension System
	-5	Acoustical Sealant
	-6	Acoustical Insulation (")
	-7	Metal Edge Trim
	-8	Auxiliary Support Framing
	-9	Metal Control Joint
	-10	High Impact Gypsum Board
	-11	Concrete Interior Finishing Compound
	-12	Stiffener
093000	-1	Porcelain Wall Tile (" x ")
	-2	Shower Pan
	-3	Shower Pan Flashing
	-4	Porcelain Floor Tile (" x ")
	-5	Tile Base
	-6	Tile Cap
	-7	Setting Bed
	-8	Uncoupling water-proof membrane
	-9	Shower Splashguard
	-10	Shower Niche
095113	-1	Acoustical Panel ('x ') (F = Fire Rated)
	-2	Ceiling Suspension System
	-3	Edge Mold Trim
	-4	Auxiliary Support Framing
096513	-1	Resilient Tile Flooring
	-2	Resilient Wall Base
	-3	Edge Strip
	-4	Tactile Warning Surface
	-5	Resilient Stair Tread
	-6	Resilient Stair Riser
	-7	Resilient Stringer Skirt
	-8	Resilient STair Nose
096813	-1	Carpet Tile
096900	-1	Access Flooring
099113	-1	Exterior Painting
099123	-1	Interior Painting
099635	-1	Secondary Containment Coating System
101400	-1	Signage
102113	-1	Toilet Partition
	-2	Urinal Screen
102213	-1	Wire Mesh Partitions
102600	-1	Impact-Resistant Cornerguard
102800	-1	Tissue Dispenser
	-2	Framed Mirror
	-3	Sanitary Napkin Disposer
	-4	Grab Bar
	-5	Shower Seat
	-6	Shower Curtain Rod
	-7	Coat/Robe Hook
	-8	Shower Curtain
104413	-1	Fire Extinguisher Cabinet
104416	-1	Fire Extinguisher
105113	-1	Personnel Locker
	-2	Locker
	-3	Bench
105300	-1	Pre- Manufactured Canopies
107500	-1	Flagpole
108113	-1	Deterrent Spikes
122413	-1	Roller Window Shades
133600	-1	Spray Painting Booth
142400	-1	Hydraulic Elevator
311000	-1	Site Clearing
312000	-1	Earth Moving
	-2	Interior Fill
	-3	Exterior Fill
	-4	Granular Drainage Course
	-5	Subbase Course
321313	-1	Concrete Paving
334600	-1	Perforated Wall Pipe & Fittings
	-2	Geotextile Filter Fabric (Flat/Sock)
	-3	Drainage Panel

NOTE: REFER TO STRUCTURAL DRAWINGS FOR REINFORCING STEEL IN EXTERIOR WALLS AND CONCRETE NOT SHOWN

NOTE: REFER TO ALL DETAILS (DETAILS LOCATED ON THIS SHEET, PRECEEDING SHEETS AND FOLLOWING SHEETS) FOR APPLICABLE NOTES NOT SHOWN

NOTE: REFER TO ALL SECTIONS (SECTIONS LOCATED ON THIS SHEET, PRECEEDING SHEETS AND FOLLOWING SHEETS) FOR APPLICABLE NOTES NOT SHOWN

HTK ARCHITECTS PA
900 S. KANSAS AVE., SUITE 200
TOPEKA KANSAS 66612
P 785.266.5373
9300 W 110TH ST. STE. 150
OVERLAND PARK, KANSAS 66210
P 913.663.5373
www.htkarchitects.com

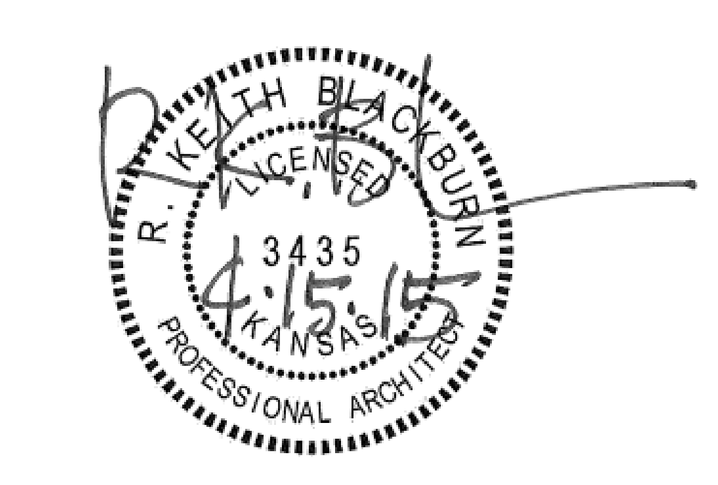



DATE:
- 4-15-15

REVISED DATE:
- 12-18-14
- 2-9-15
- 3-10-15
-

HTK PROJECT NUMBER:
- 1410.03

Department of Administration
Office of Facilities and
Procurement Management
800 SW Jackson, Suite 700
Topeka, Kansas 66612-1216
Phone 785-296-8899
FAX 785-296-3456

STATE OF KANSAS
STATE OF KANSAS ENERGY & SERVICE CENTER
221 SW 7th Street
BUILDING NUMBER 17300-0038

DATE: 4-15-15 DRAWN BY: Author CHECKED BY: Checker REV:

WALL SECTIONS

A-012651

A304

CONSTRUCTION DOCUMENTS

4/16/2015 11:10:27 AM C:\Users\jms\Documents\REVIT\State of Kansas Energy_Central_jms.rvt

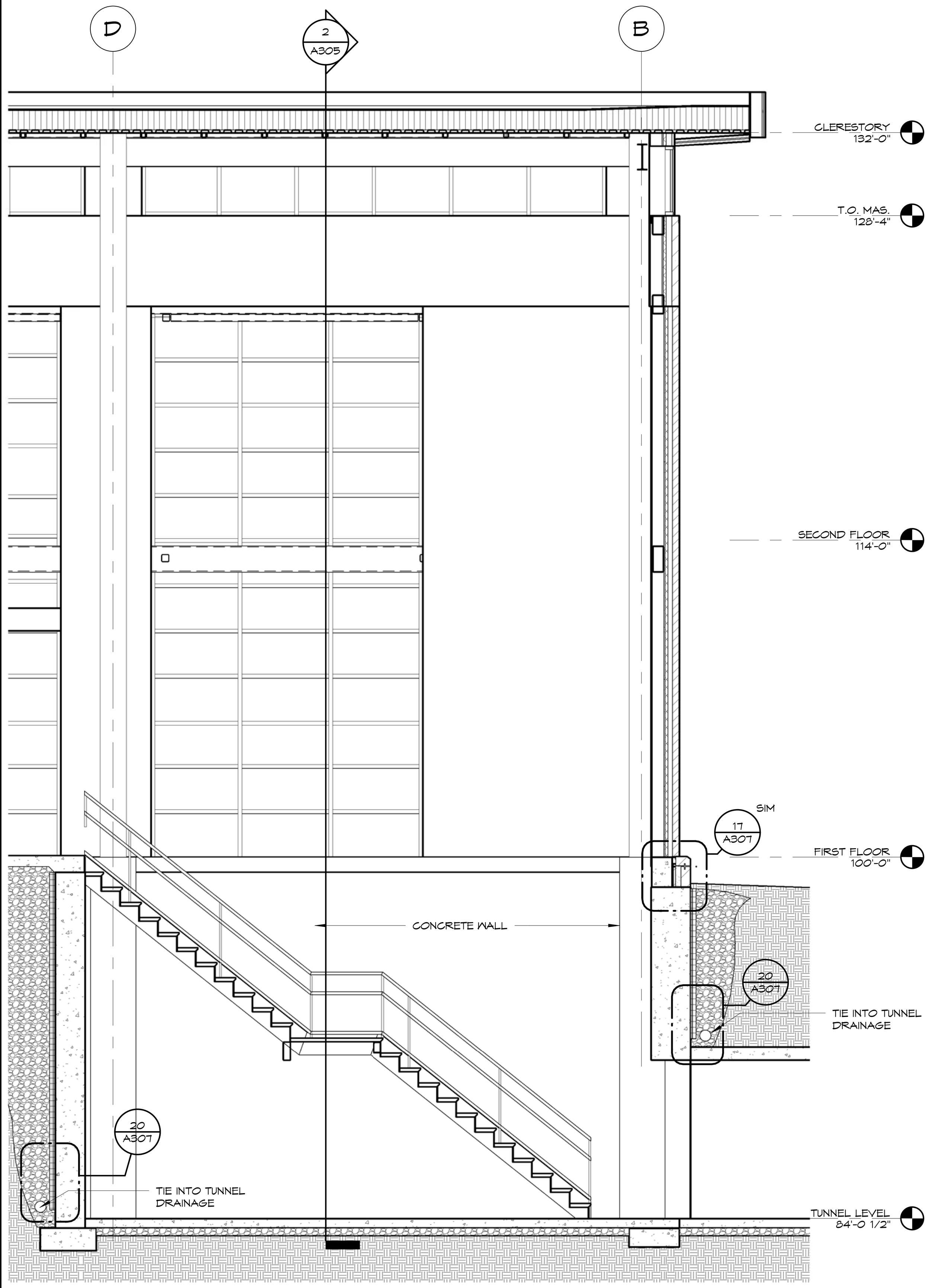

1 TUNNEL ACCESS 1
1/4" = 1'-0"

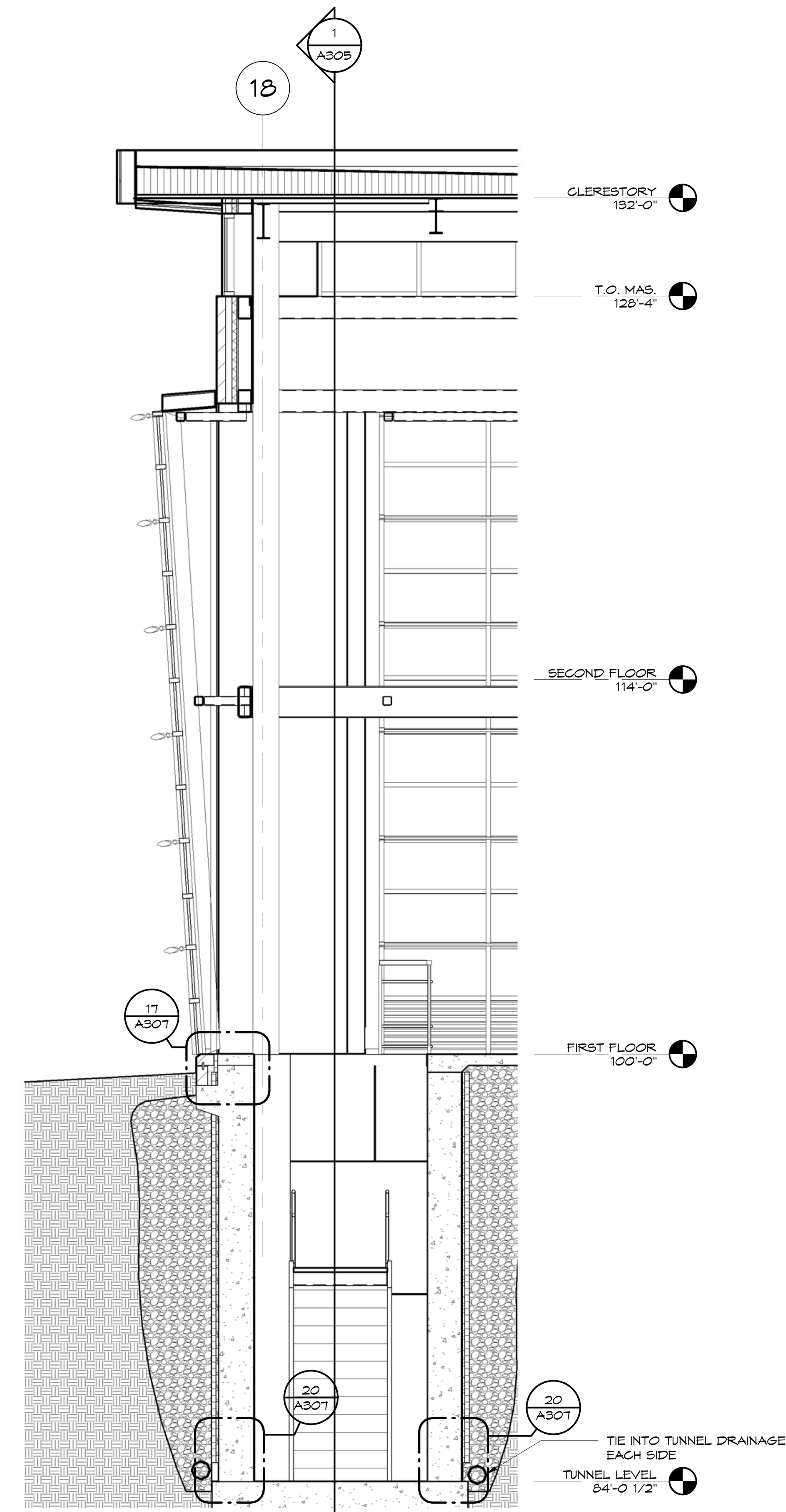

2 TUNNEL ACCESS 2
1/4" = 1'-0"

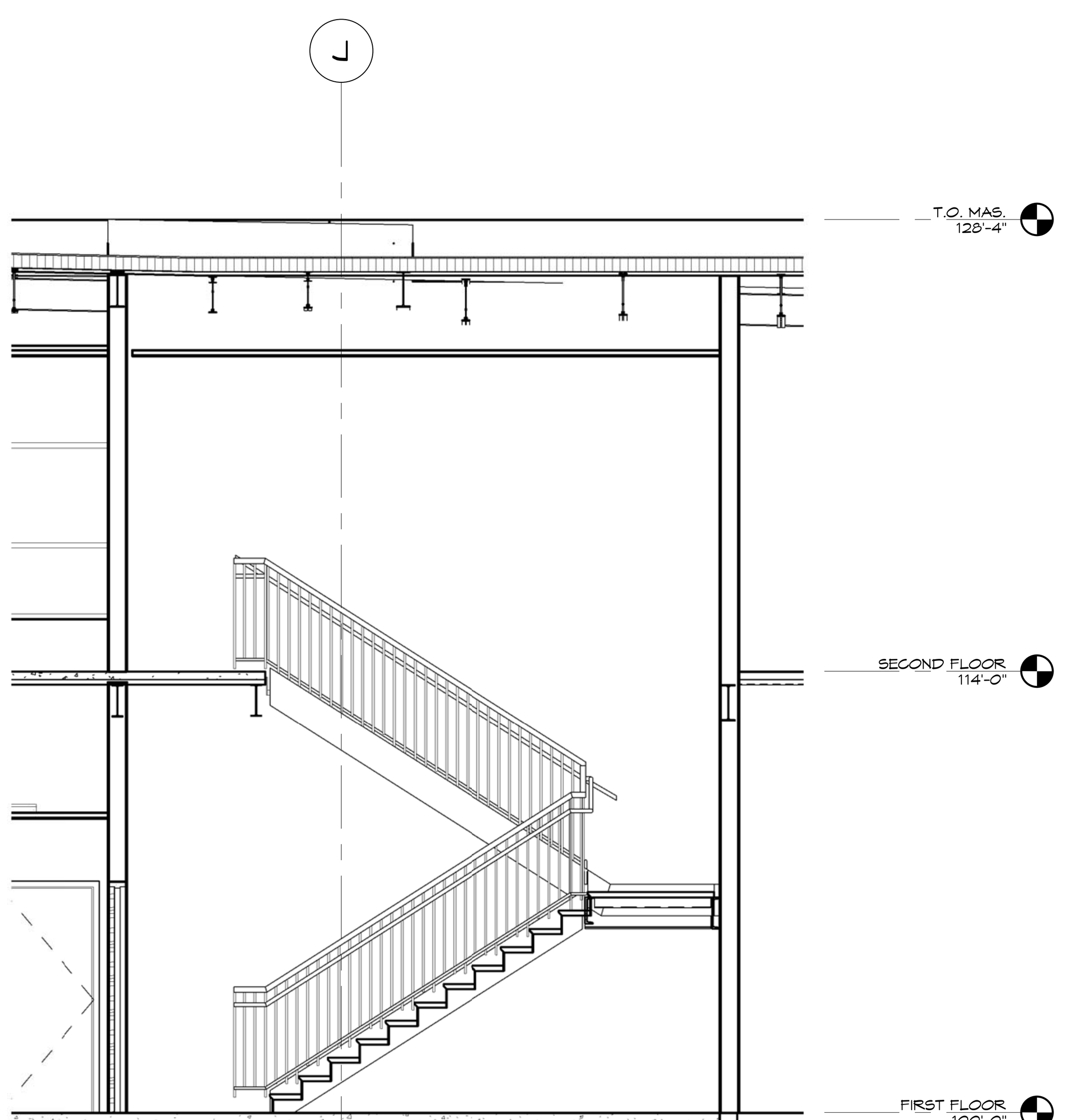

3 STAIR
1/4" = 1'-0"

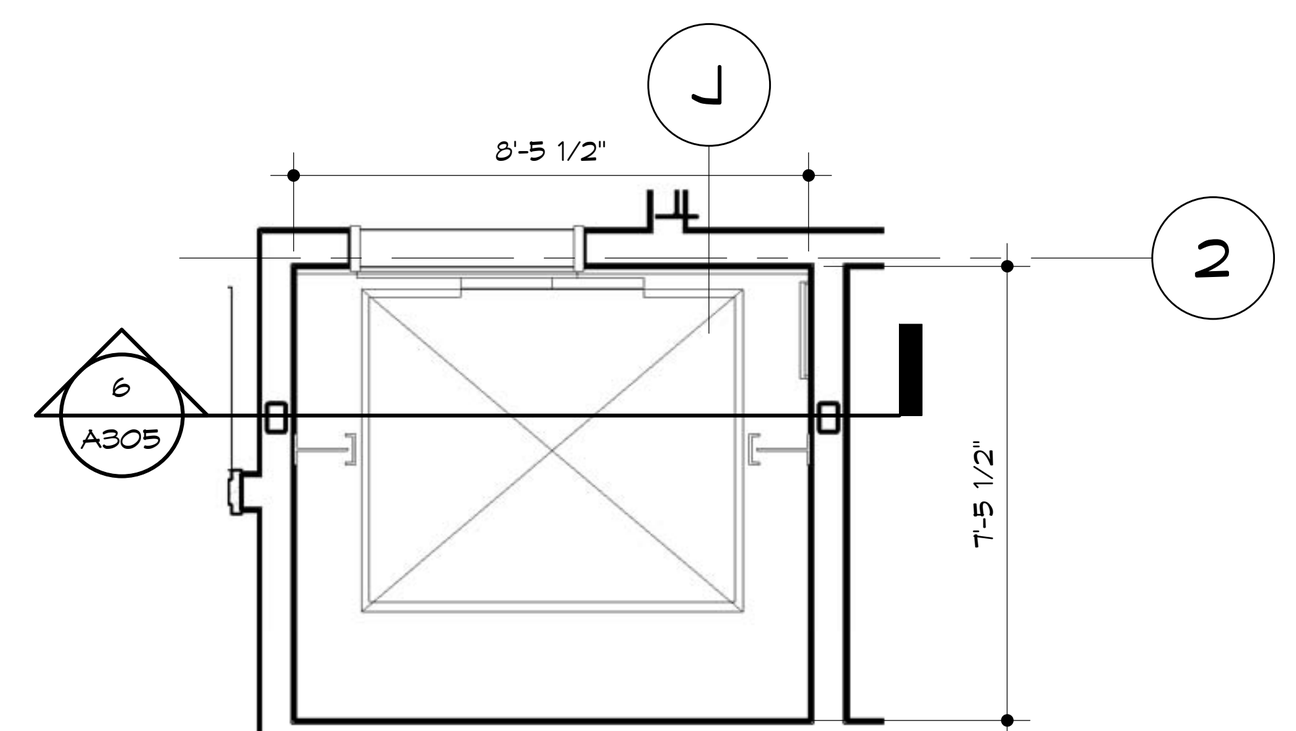

7 ENLARGED ELEVATOR PLAN
1/4" = 1'-0"

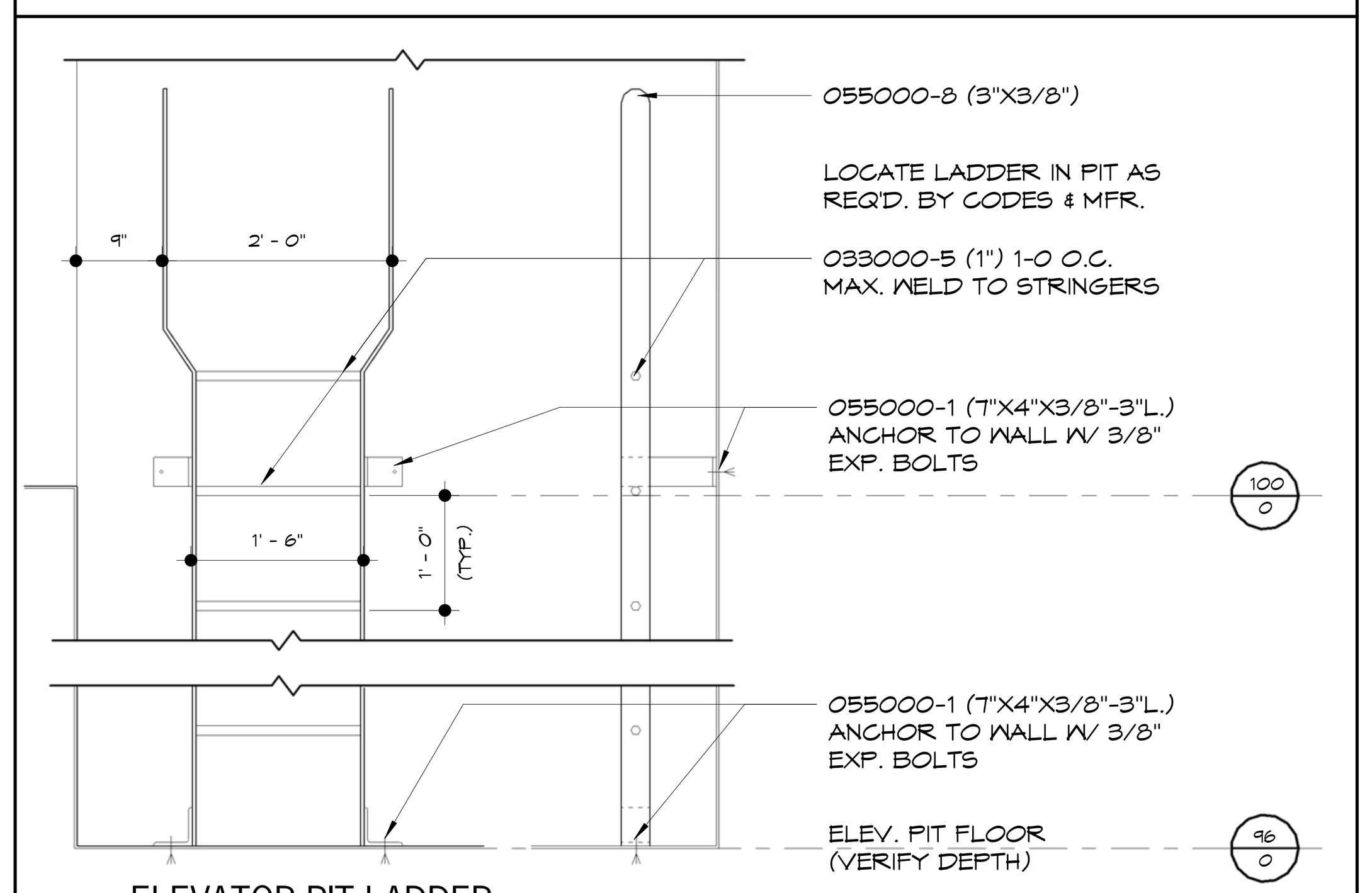

8 ELEVATOR PIT LADDER
3/4" = 1'-0"

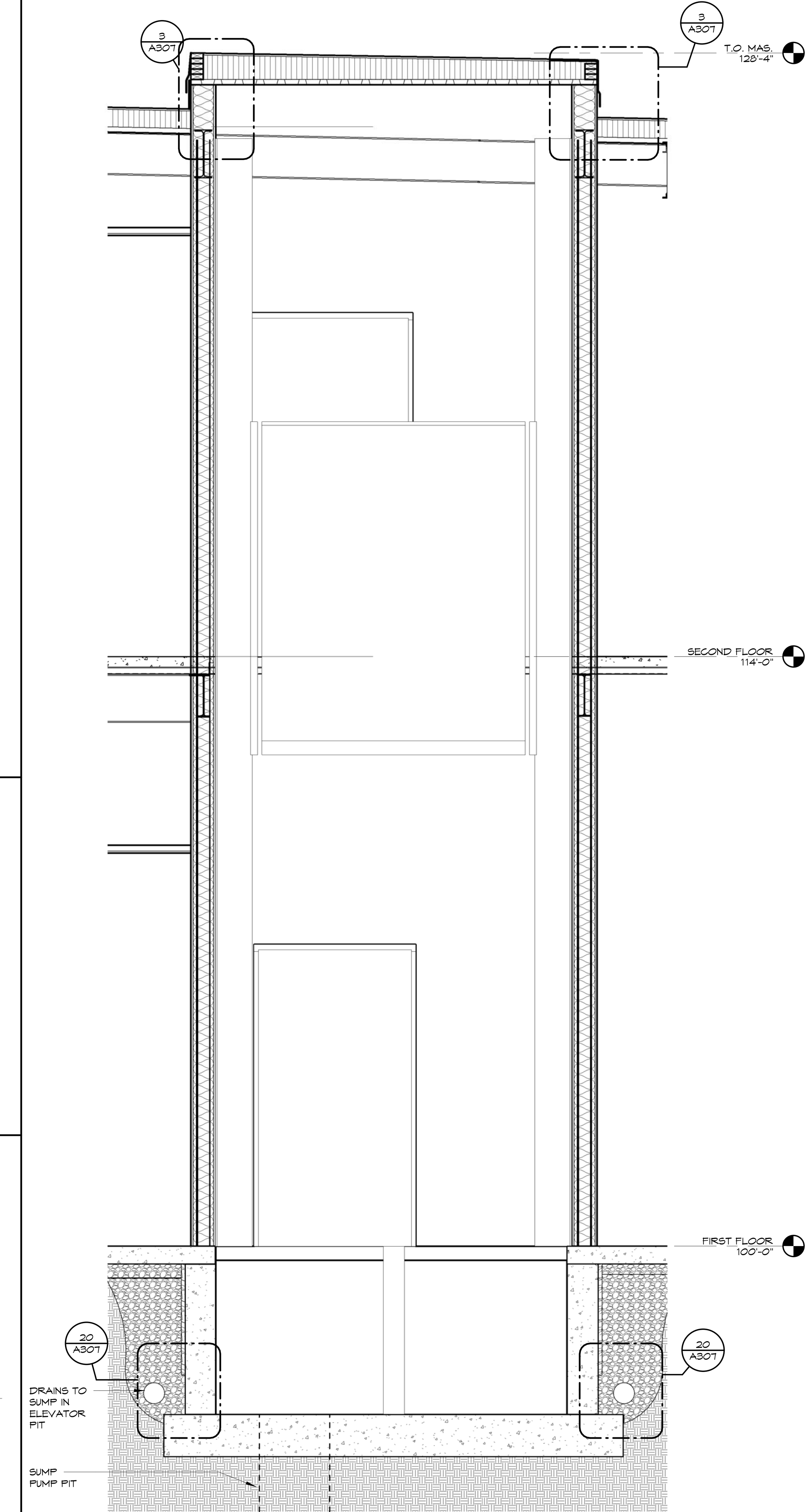

6 ELEVATOR
1/2" = 1'-0"

KEYNOTES

Note: Keynotes are drawn from a master list & may not be sequentially numbered. Sizes (Ex: 2x4) or other info. following keynote on drawings indicates criteria for those materials/locations which may differ from std. material specified.

033000	-1	Concrete Structure
	-2	Concrete Floor Slab
	-3	Vapor Barrier
	-4	Welded Wire Fabric
	-5	Steel Reinforcing Bar
	-6	Rustication Joint
	-7	Waterstop
	-8	Dovetail Anchor
	-9	Sidewalk
	-10	Premolded Joint Filler
035300	-1	Concrete Topping
042000	-1	Face Brick
	-2	Concrete Masonry Unit - Normal Weight (")
	-3	Concrete Masonry Unit - Lightweight (")
	-4	Wire Reinforcing
	-5	Metal Tie/Anchor
	-6	Through Wall Flashing
	-7	Control Joint Strip
	-8	Bond Beam (")
	-9	Compressible Filler
	-10	Weep Hole
	-11	Cavity Drainage Material
	-12	Termination Bar
044300	-1	Stone Masonry
	-2	Anchor
	-3	Stone Jamb
	-4	Stone Sill
	-5	Belt Course
047200	-1	Cast Stone
051200	-1	Steel Beams
	-2	Steel Column
	-3	Steel Tube
	-4	Steel Channel
052100	-1	Steel Joist
	-2	Joist - Extended End
	-3	Joist - Ceiling Extension
053100	-1	Metal Decking
	-3	Steel Composite Decking
	-2	Flexible Closure Strips
054000	-1	Structural Steel Studs
	-2	Structural Steel Joists
	-3	"C" Closure
055000	-1	Steel Angle
	-4	Steel Channel
	-5	Steel Lintel
	-6	Steel Pipe
	-7	Steel Tube
	-8	Steel Plate
	-9	Steel Ladder
	-10	Steel Bollard
055100	-1	Steel Stairs
	-2	Steel Stair Stringer
	-3	Steel Embed Plate
055213	-1	Steel Pipe Handrail
	-2	Steel Pipe Rail/Post
	-3	Steel Handrail Wall Bracket
	-4	Steel Rod
055300	-1	Steel Grating
	-2	Steel Frame
057300	-1	Decorative Metal Railings
057500	-1	Ornamental Metal Stamped Grille
061053	-1	2x Wood Nailer (")
	-2	2x Wood Blocking (")
	-3	1x Wood Continuous (")
	-4	Plywood (")
	-5	#30 Felt
	-6	#15 Felt
	-7	Sheathing (")
064116	-1	Interior Architectural Woodwork
	-2	High Pressure Laminate
	-3	Cabinet Liner Laminate
	-4	Particle Board
	-5	Plywood
	-6	3mm Edge Molding
	-7	Solid Wood Blocking
	-8	Hardwood
	-9	Steel Tube/Leg Frame
	-10	Door Hinge
	-11	Door/Drawer Pull
	-12	Magnetic Catch
	-13	Drawer
	-14	Shelf Supports
	-15	Countertop
	-16	Solid-Surfacing Material
071113	-1	Bituminous Dampproofing
071326	-1	Self-Adhering Sheet Waterproofing
072100	-1	Foundation Wall or Under Slab Insulation (R-)
	-2	Cavity Wall Insulation (R-)
	-3	Building Insulation - Unfaced (R-)
	-4	Building Insulation - Faced (R-)
	-5	Sill Sealer
	-6	Safing Insulation
072726	-1	Fluid Applied Membrane Air Barrier
	-2	Flashing Tape
074213	-1	Metal Wall Panel (Type 1)
	-2	Trim
	-3	Z-Furring (")
	-4	Metal Wall Panel (Type 2)
	-5	Metal Soffit Panel
075423	-1	Thermoplastic Polyolefin (TPO) Roofing
	-2	Roof Insulation Flat
	-3	Roof Insulation Tapered
	-4	Roof Expansion Joint
	-5	Coverboard
	-6	Walkway Protection Board
076200	-1	Sheet Metal Flashing and Counterflashing
	-2	Pre-finished Roof Edge
	-3	Pre-finished Coping
	-4	Sheet Metal Reglet
	-5	Sheet Metal Gutter
	-6	Sheet Metal Downspout
	-7	Sheet Metal Scupper
077129	-1	Roof Expansion Joint
077200	-1	Roof Hatch/Ladder
078413	-1	Penetration Firestopping
078443	-1	Joint Firestopping
079200	-1	Sealant - Rake where required
	-2	Joint Filler
	-3	Gasket
	-4	Backer Rod
079500	-1	Expansion Control

081113	-1	Steel Door
	-2	Steel Frame
	-3	Frame Anchor
	-4	Louver
	-5	Plaster Guard
	-6	FPR Door
081416	-1	Flush Wood Door
083113	-1	Access Door
	-2	Access Door Frame
	-3	Floor Access Door
083323	-1	Overhead Coiling Door
	-2	Coiling Counter Door
083613	-1	Sectional Overhead Door
	-2	Sectional Overhead Door Track
	-3	Weatherstripping
084113	-1	Aluminum Entrance Door
	-2	Aluminum Entrance Frame
	-3	Sunshade
	-4	Aluminum Subsill
084413	-1	Glazed Aluminum Curtain Wall
	-2	Threshold
	-3	Sunshade Louver
	-4	Aluminum Subsill
087100	-1	Track Hardware
088000	-1	Glazing (as scheduled)
088853	-1	Securtiy Glazing (as scheduled)
089119	-1	Louvers and Vents
092216	-1	Steel Stud (")
	-2	Steel Stud Runner (")
	-3	Furring Channel (")
092400	-1	Portland Cement Plastering
	-2	Metal Lath
	-3	Casing Bead
092900	-1	Gypsum Board (")
	-2	Fire Rated Gypsum Board (")
	-3	Cementitious Tile Backer Panel
	-4	Metal Suspension System
	-5	Acoustical Sealant
	-6	Acoustical Insulation (")
	-7	Metal Edge Trim
	-8	Auxiliary Support Framing
	-9	Metal Control Joint
	-10	High Impact Gypsum Board
	-11	Concrete Interior Finishing Compound
	-12	Stiffener
093000	-1	Porcelain Wall Tile (" x ")
	-2	Shower Pan
	-3	Shower Pan Flashing
	-4	Porcelain Floor Tile (" x ")
	-5	Tile Base
	-6	Tile Cap
	-7	Setting Bed
	-8	Uncoupling water-proof membrane
	-9	Shower Splashguard
	-10	Shower Niche
095113	-1	Acoustical Panel ('x ') (F = Fire Rated)
	-2	Ceiling Suspension System
	-3	Edge Mold Trim
	-4	Auxiliary Support Framing
096513	-1	Resilient Tile Flooring
	-2	Resilient Wall Base
	-3	Edge Strip
	-4	Tactile Warning Surface
	-5	Resilient Stair Tread
	-6	Resilient Stair Riser
	-7	Resilient Stringer Skirt
	-8	Resilient STair Nose
096813	-1	Carpet Tile
096900	-1	Access Flooring
099113	-1	Exterior Painting
099123	-1	Interior Painting
099635	-1	Secondary Containment Coating System
101400	-1	Signage
102113	-1	Toilet Partition
	-2	Urinal Screen
102213	-1	Wire Mesh Partitions
102600	-1	Impact-Resistant Cornerguard
102800	-1	Tissue Dispenser
	-2	Framed Mirror
	-3	Sanitary Napkin Disposer
	-4	Grab Bar
	-5	Shower Seat
	-6	Shower Curtain Rod
	-7	Coat/Robe Hook
	-8	Shower Curtain
104413	-1	Fire Extinguisher Cabinet
104416	-1	Fire Extinguisher
105113	-1	Personnel Locker
	-2	Locker
	-3	Bench
105300	-1	Pre- Manufactured Canopies
107500	-1	Flagpole
108113	-1	Deterrent Spikes
122413	-1	Roller Window Shades
133600	-1	Spray Painting Booth
142400	-1	Hydraulic Elevator
311000	-1	Site Clearing
312000	-1	Earth Moving
	-2	Interior Fill
	-3	Exterior Fill
	-4	Granular Drainage Course
	-5	Subbase Course
321313	-1	Concrete Paving
334600	-1	Perforated Wall Pipe & Fittings
	-2	Geotextile Filter Fabric (Flat/Sock)
	-3	Drainage Panel

NOTE: REFER TO STRUCTURAL DRAWINGS FOR REINFORCING STEEL IN EXTERIOR WALLS AND CONCRETE NOT SHOWN

NOTE: REFER TO ALL DETAILS (DETAILS LOCATED ON THIS SHEET, PRECEEDING SHEETS AND FOLLOWING SHEETS) FOR APPLICABLE NOTES NOT SHOWN

NOTE: REFER TO ALL SECTIONS (SECTIONS LOCATED ON THIS SHEET, PRECEEDING SHEETS AND FOLLOWING SHEETS) FOR APPLICABLE NOTES NOT SHOWN

HTK ARCHITECTS PA
900 S. KANSAS AVE., SUITE 200
TOPEKA KANSAS 66112
P 785.266.5373
9300 W 110TH ST. STE. 150
OVERLAND PARK, KANSAS 66210
P 913.663.5373
www.htkarchitects.com

R. KEITH BLACKBURN LICENSED 3435 4-15-15 KANSAS PROFESSIONAL ARCHITECT

DENNIS A. HAUG LICENSED 4-15-15 2567 KANSAS PROFESSIONAL ARCHITECT

DATE:
- 4-15-15

REVISED DATE:
- 12-18-14
- 2-9-15
- 3-10-15
-

HTK PROJECT NUMBER:
- 1410.03

Department of Administration
Office of Facilities and
Procurement Management
800 SW Jackson, Suite 700
Topeka, Kansas 66612-1216
Phone 785-296-8899
FAX 785-296-3456

STATE OF KANSAS
STATE OF KANSAS ENERGY & SERVICE CENTER
221 SW 7th Street
BUILDING NUMBER 17300-0038

DATE: 4-15-15 DRAWN BY: Author CHECKED BY: Checker REV:

STAIRS AND ELEVATORS

A-012651

A305

CONSTRUCTION DOCUMENTS

4/16/2015 11:10:36 AM C:\Users\jms\Documents\REVIT\State of Kansas Energy_Central_jms.rvt

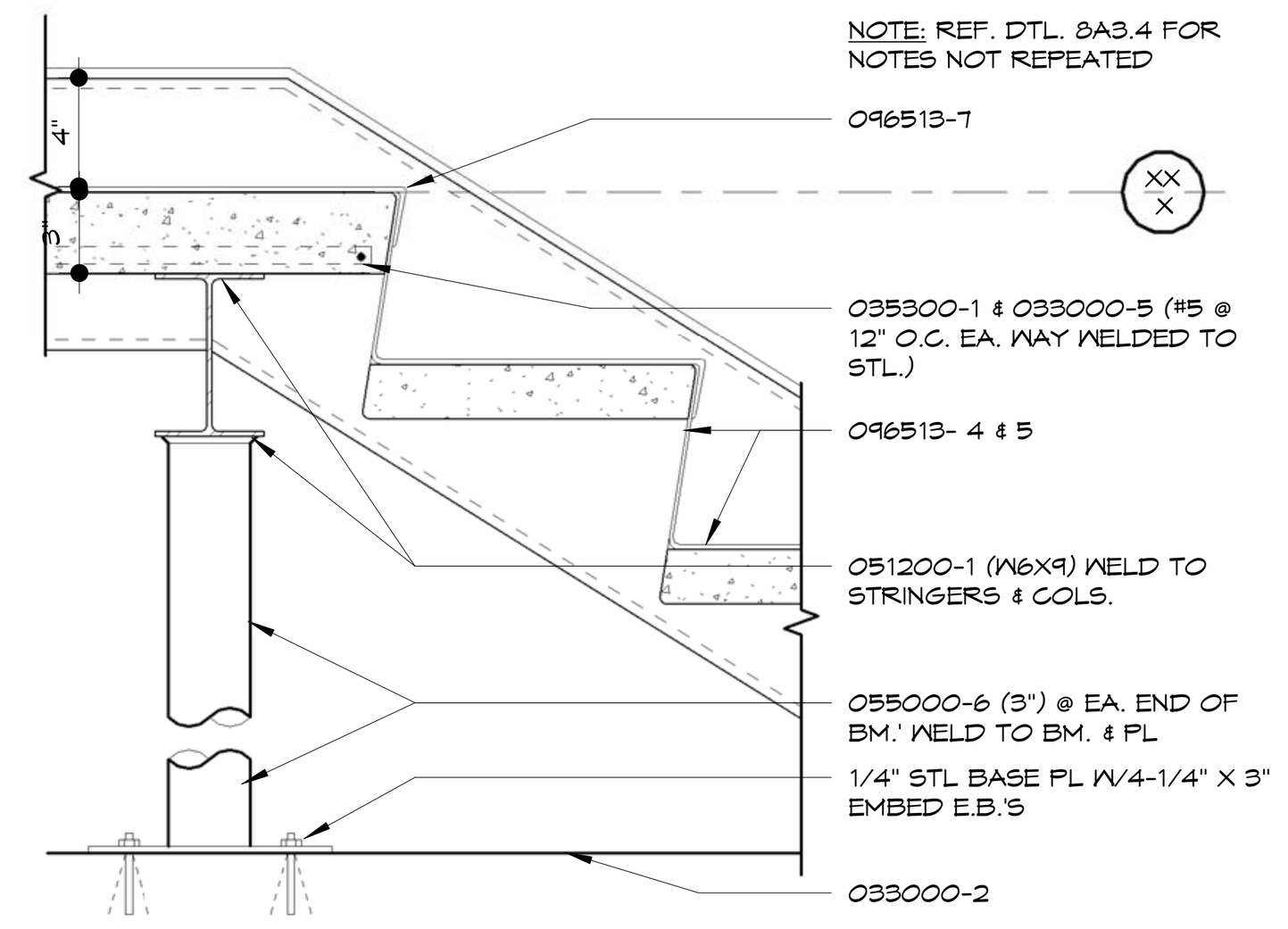

1 TYP. LANDING @ TREADS
1 1/2" = 1'-0"

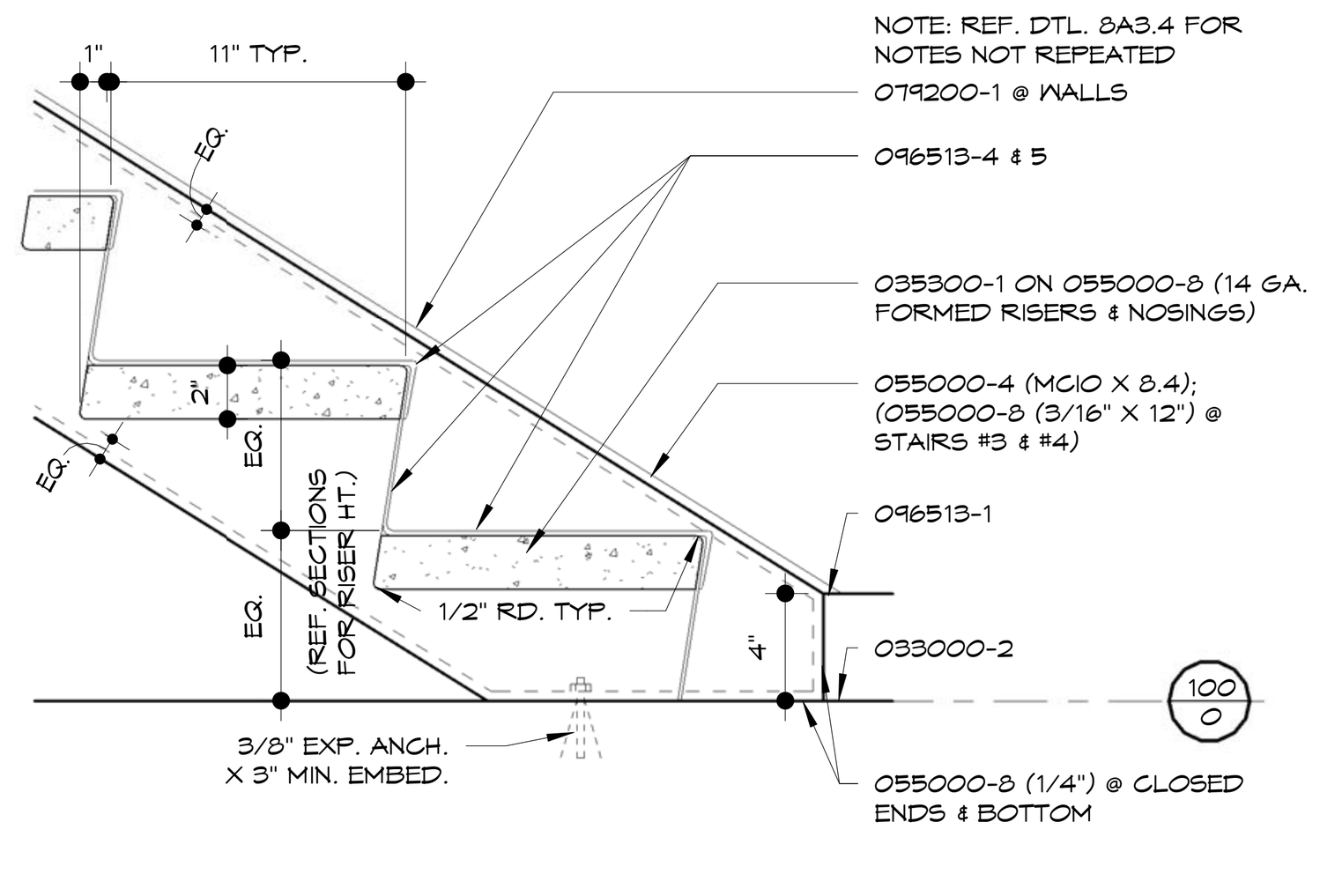

2 TYP. TREAD/STRINGER @ BOT. FLR
1 1/2" = 1'-0"

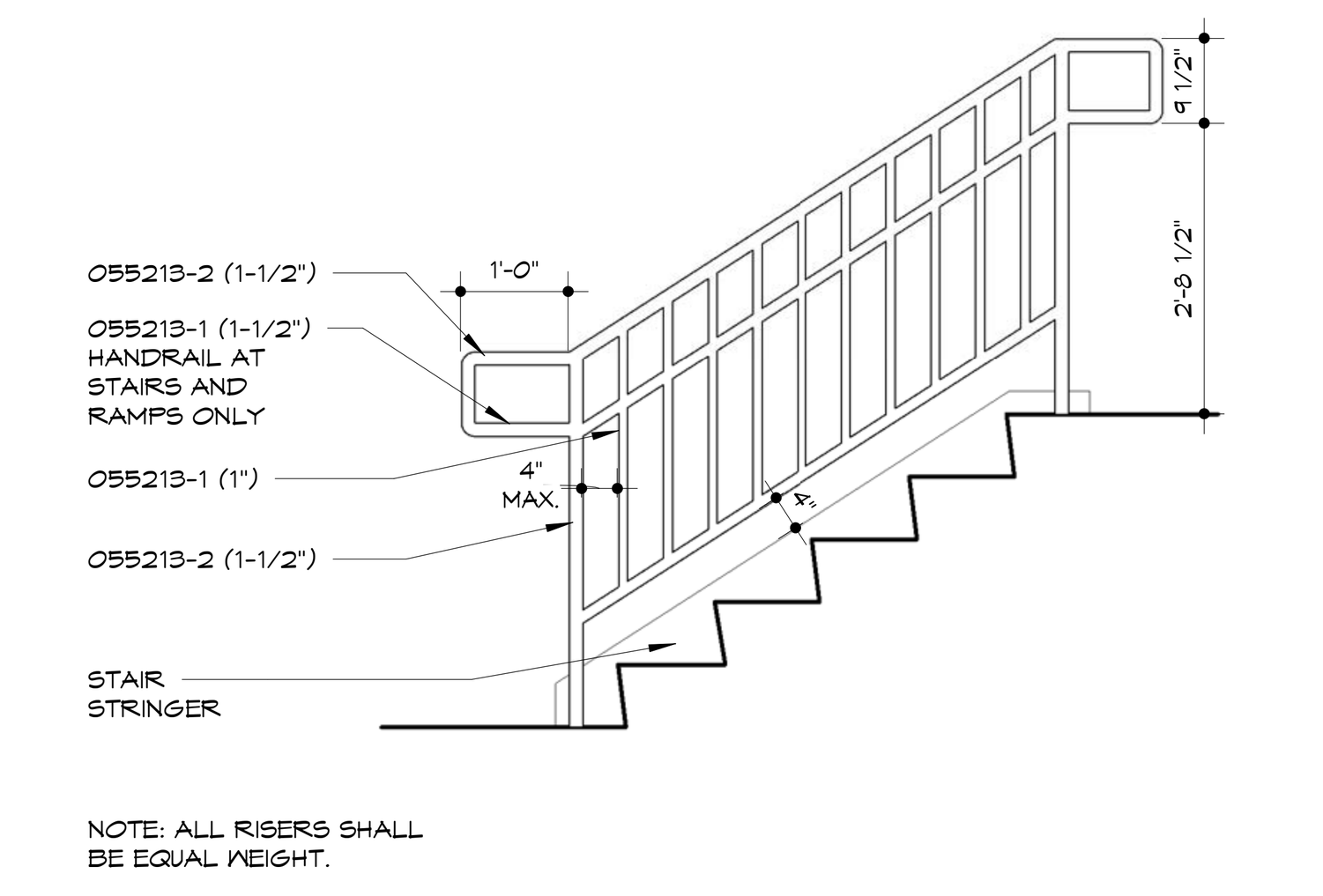

3 RAILING
1/2" = 1'-0"

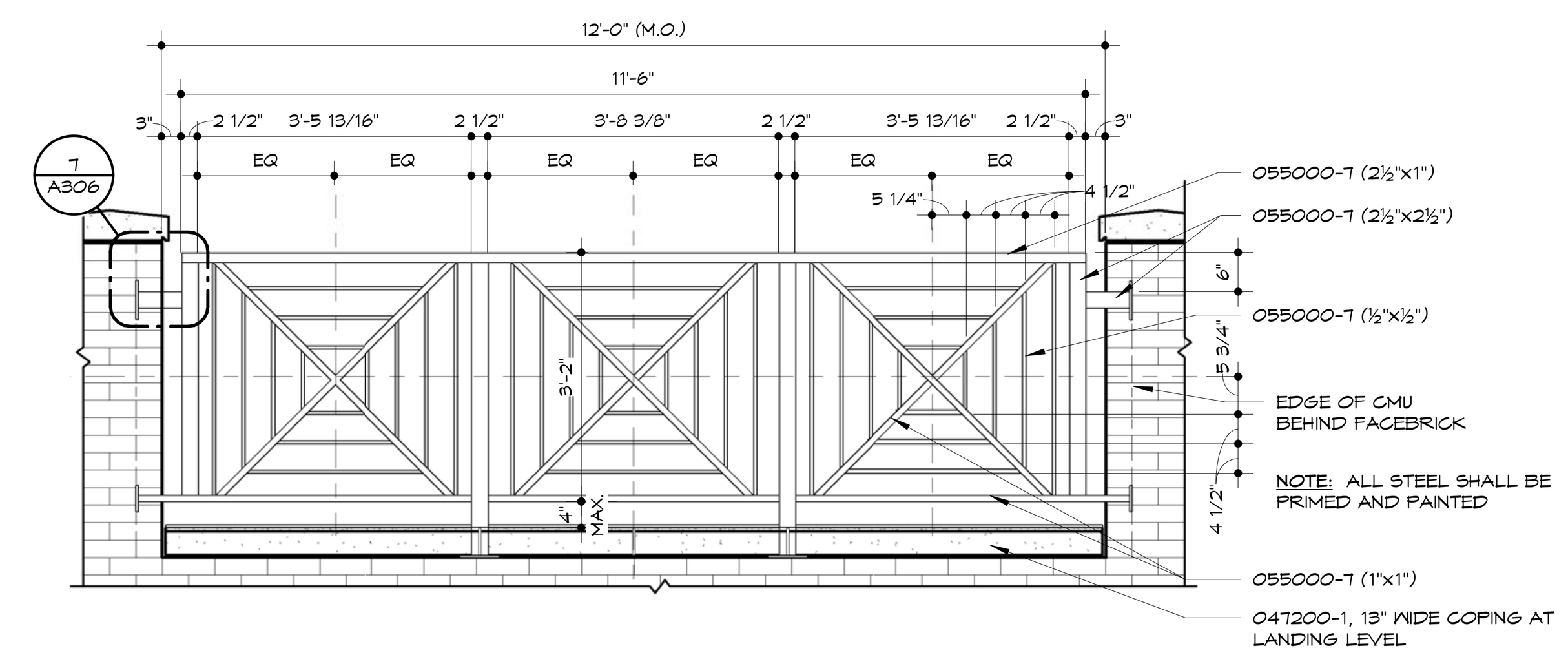

4 DECORATIVE RAILING ELEVATION
1/2" = 1'-0"

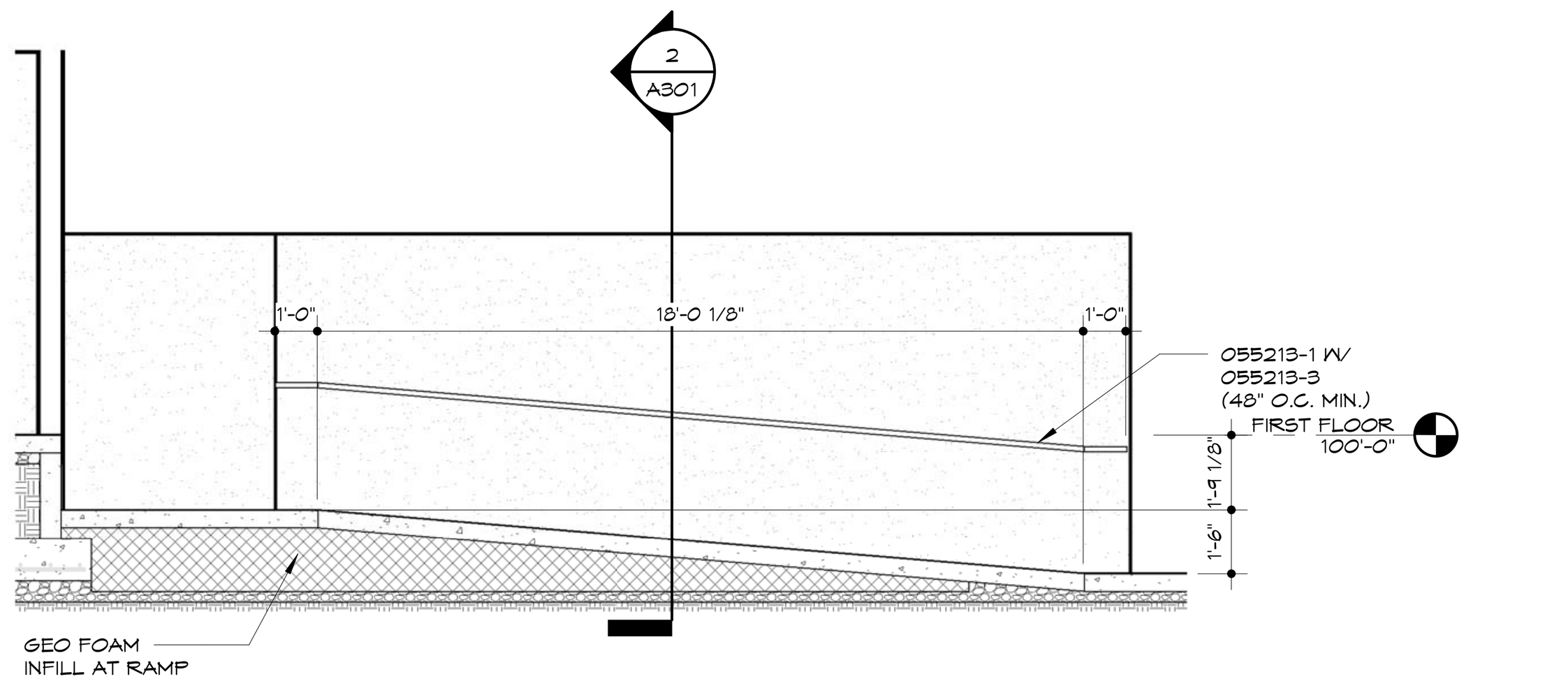

5 CARPENTRY 141 RAMP
1/4" = 1'-0"

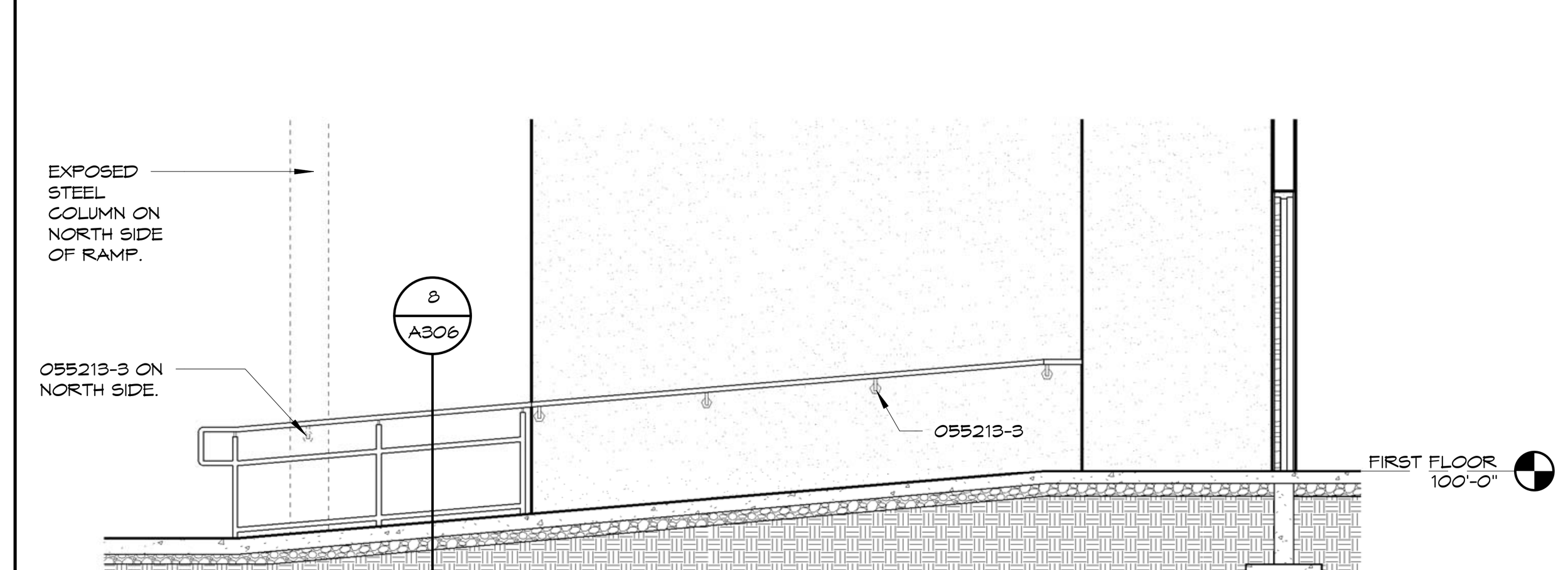

6 HVAC 134 RAMP
1/4" = 1'-0"

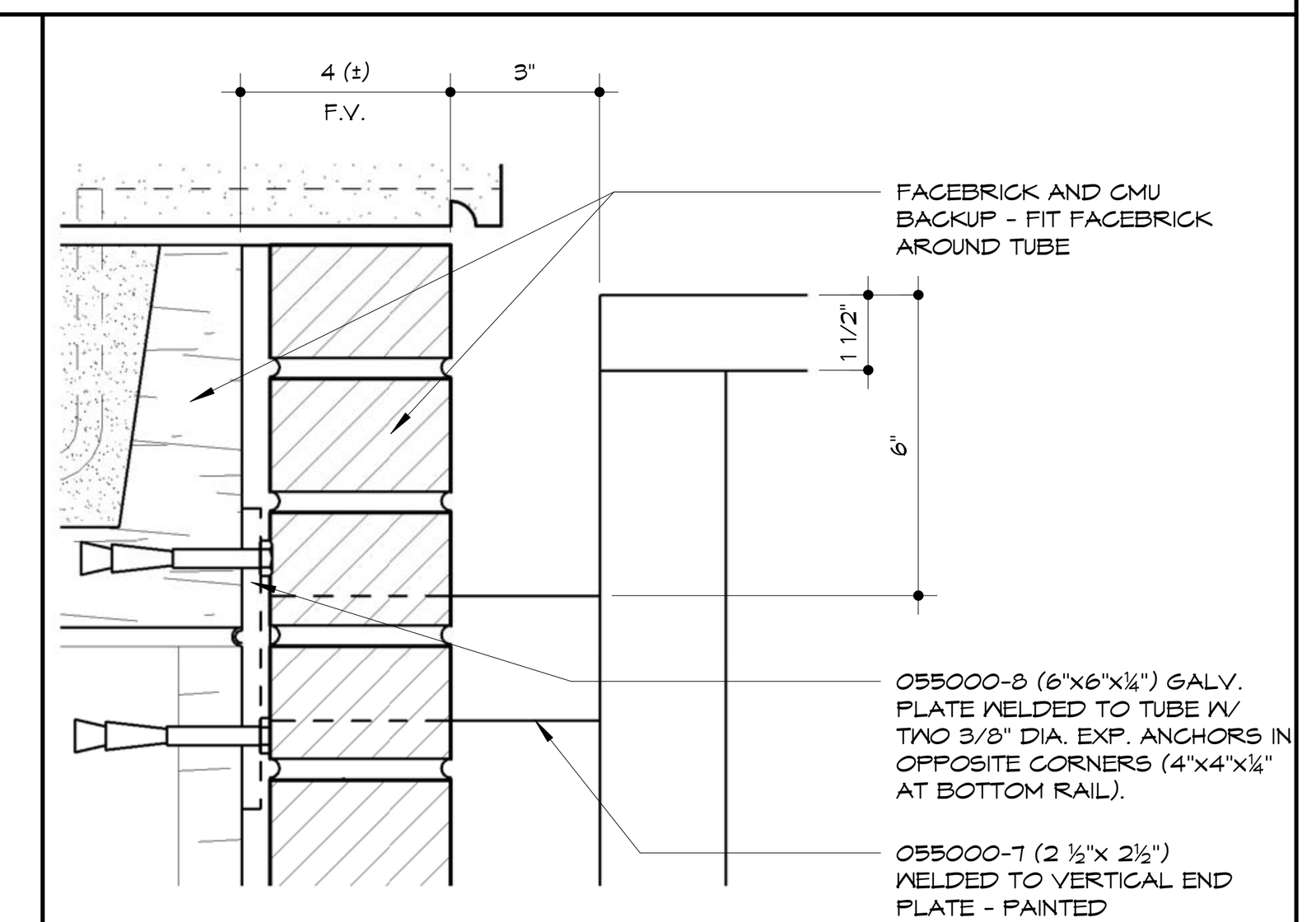

7 GUARDRAIL CONNECTION
3" = 1'-0"

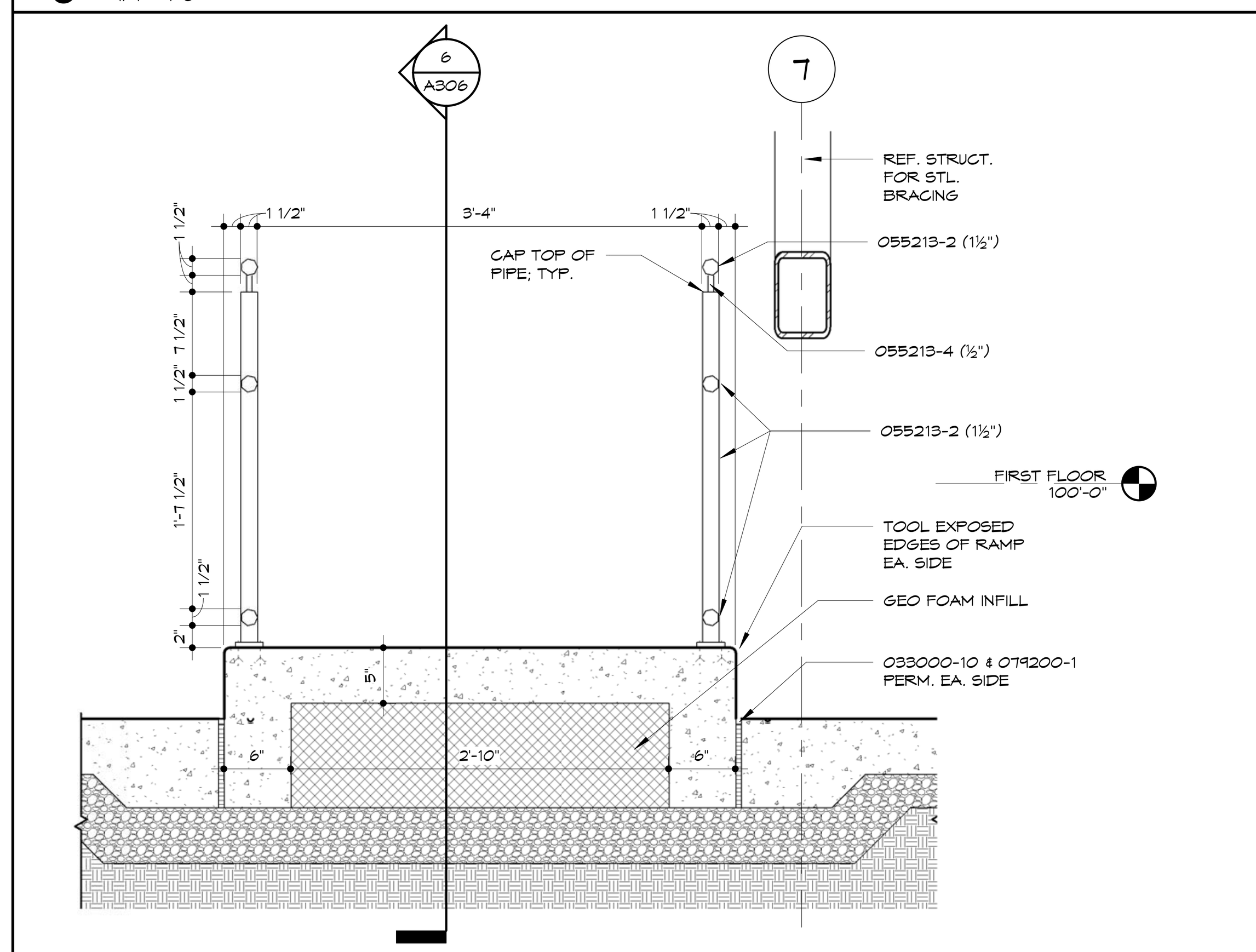

8 RAMP SECTION
1" = 1'-0"

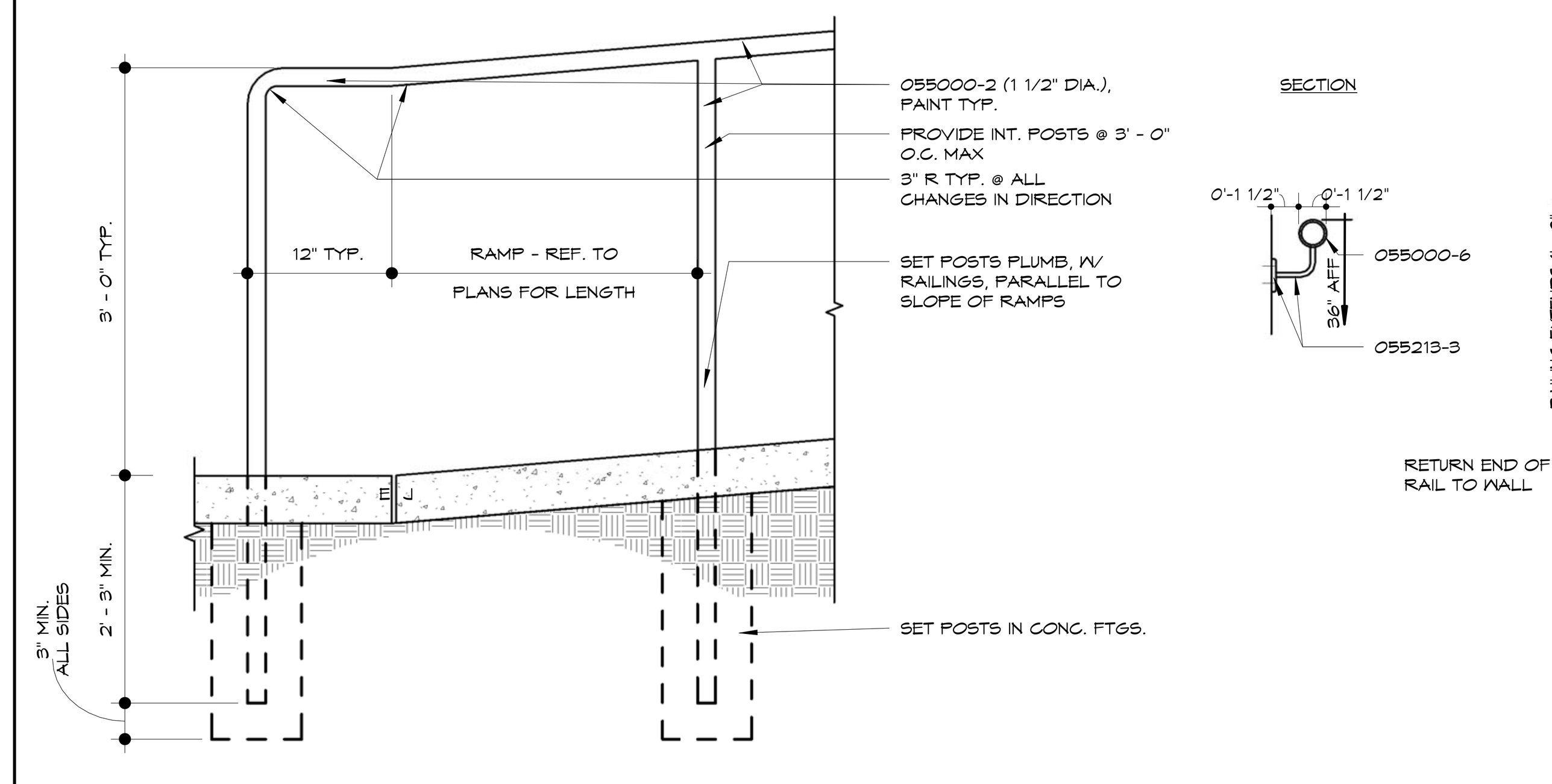

9 HANDRAIL
1 1/2" = 1'-0"

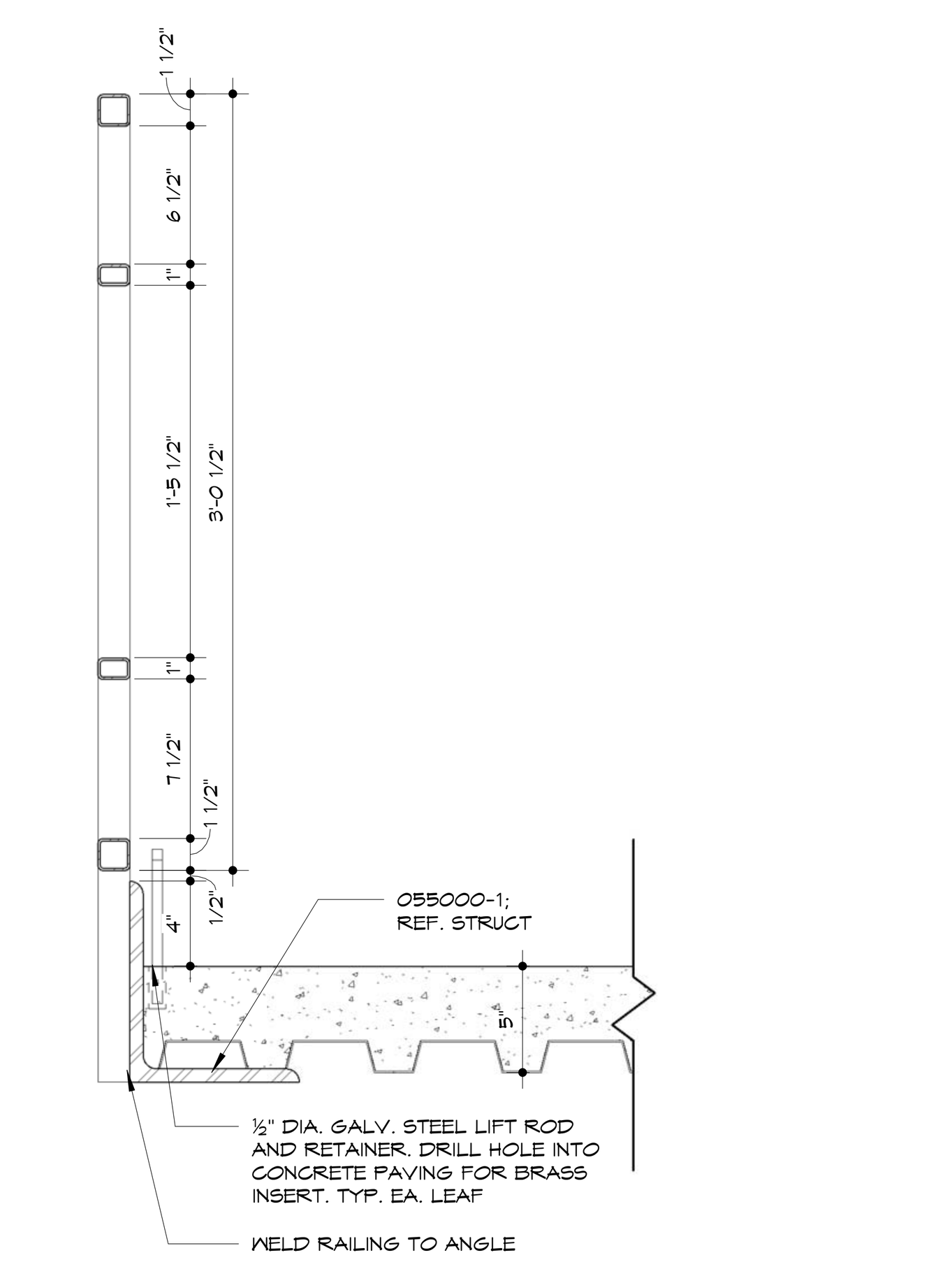

10 MEZZANINE RAILING CONNECTION
1 1/2" = 1'-0"

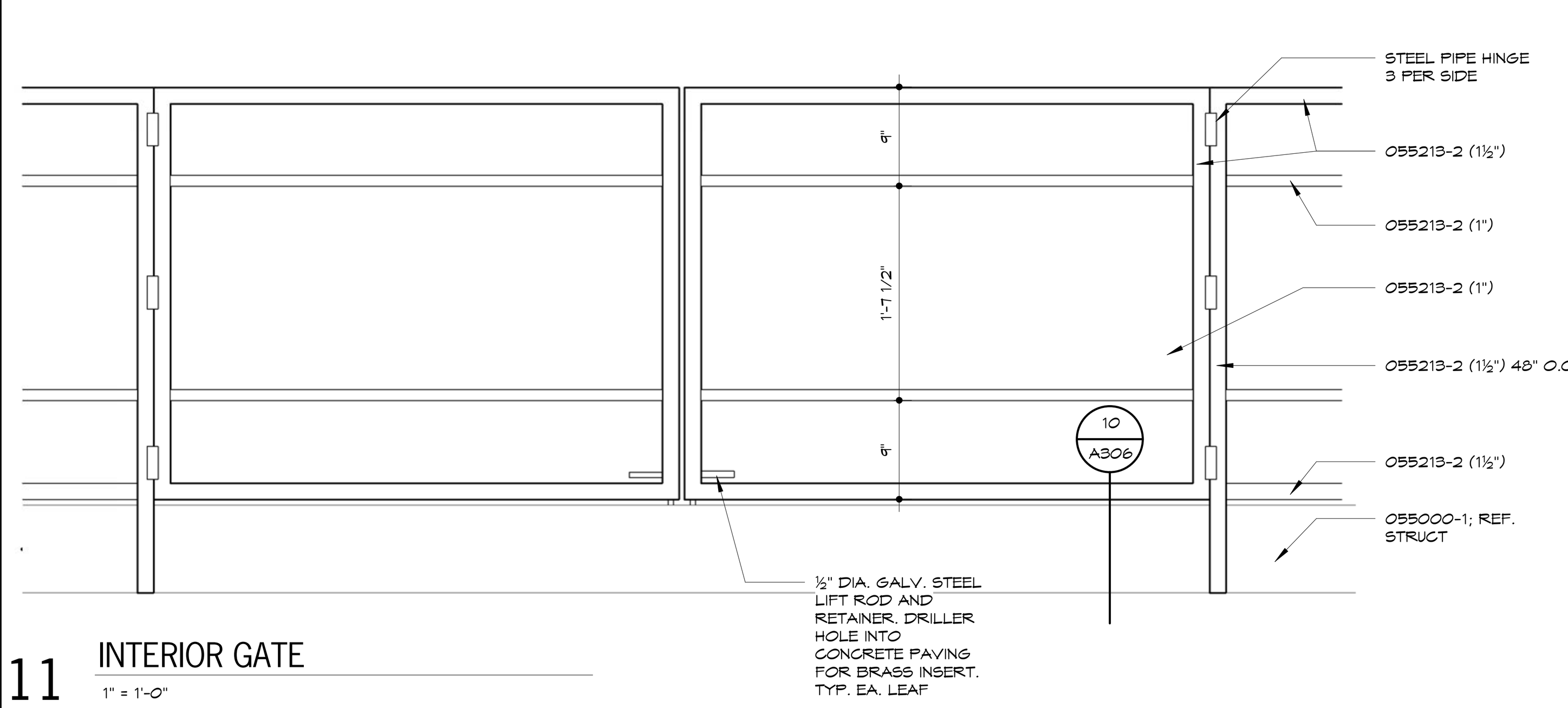

11 INTERIOR GATE
1" = 1'-0"

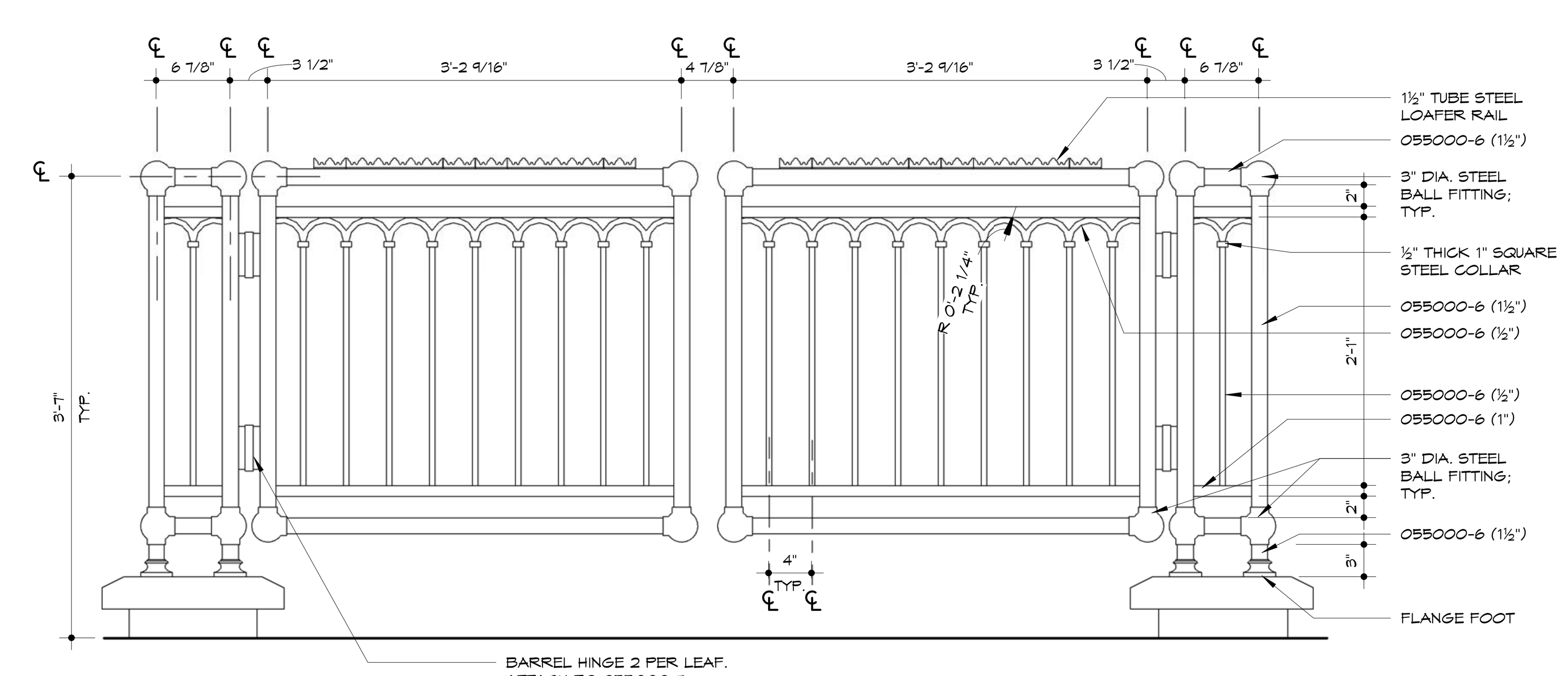

12 CAPITAL STAIRWAY GATE
1" = 1'-0"

REF.10A306 FOR RAILING CONSTRUCTION.

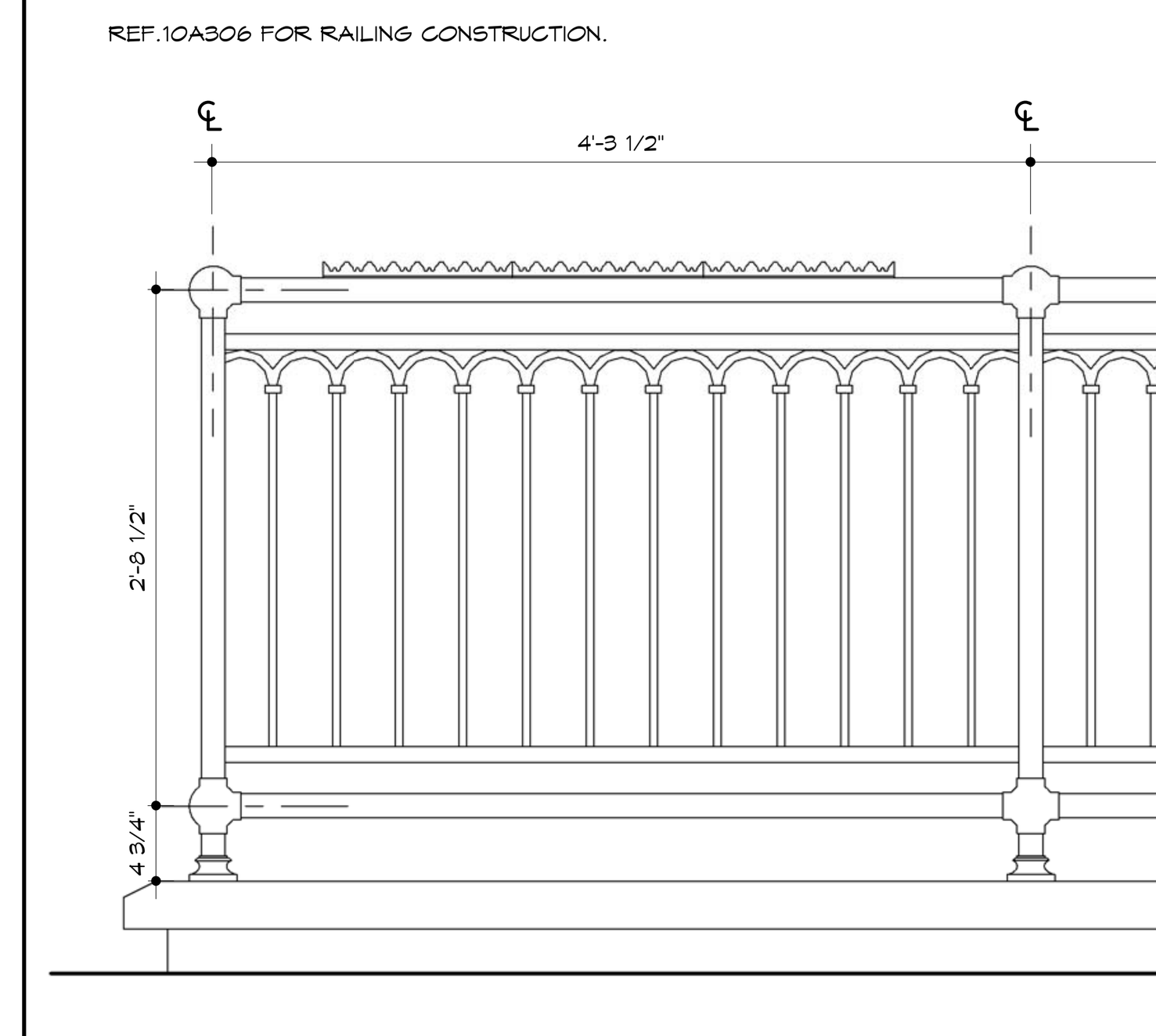

13 CAPITAL STAIRWAY SHORT GUARDRAIL
1" = 1'-0"

KEYNOTES

Note: Keynotes are drawn from a master list & may not be sequentially numbered. Sizes (Ex: 2x4) or other info. following keynote on drawings indicates criteria for those materials/locations which may differ from std. material specified.

033000	-1	Concrete Structure
	-2	Concrete Floor Slab
	-3	Vapor Barrier
	-4	Welded Wire Fabric
	-5	Steel Reinforcing Bar
	-6	Rustication Joint
	-7	Waterstop
	-8	Dovetail Anchor
	-9	Sidewalk
	-10	Premolded Joint Filler
035300	-1	Concrete Topping
042000	-1	Face Brick
	-2	Concrete Masonry Unit - Normal Weight (")
	-3	Concrete Masonry Unit - Lightweight (")
	-4	Wire Reinforcing
	-5	Metal Tie/Anchor
	-6	Through Wall Flashing
	-7	Control Joint Strip
	-8	Bond Beam (")
	-9	Compressible Filler
	-10	Weep Hole
	-11	Cavity Drainage Material
	-12	Termination Bar
044300	-1	Stone Masonry
	-2	Anchor
	-3	Stone Jamb
	-4	Stone Sill
	-5	Belt Course
047200	-1	Cast Stone
051200	-1	Steel Beams
	-2	Steel Column
	-3	Steel Tube
	-4	Steel Channel
052100	-1	Steel Joist
	-2	Joist - Extended End
	-3	Joist - Ceiling Extension
053100	-1	Metal Decking
	-3	Steel Composite Decking
	-2	Flexible Closure Strips
054000	-1	Structural Steel Studs
	-2	Structural Steel Joists
	-3	"C" Closure
055000	-1	Steel Angle
	-4	Steel Channel
	-5	Steel Lintel
	-6	Steel Pipe
	-7	Steel Tube
	-8	Steel Plate
	-9	Steel Ladder
	-10	Steel Bollard
055100	-1	Steel Stairs
	-2	Steel Stair Stringer
	-3	Steel Embed Plate
055213	-1	Steel Pipe Handrail
	-2	Steel Pipe Rail/Post
	-3	Steel Handrail Wall Bracket
	-4	Steel Rod
055300	-1	Steel Grating
	-2	Steel Frame
057300	-1	Decorative Metal Railings
057500	-1	Ornamental Metal Stamped Grille
061053	-1	2x Wood Nailer (")
	-2	2x Wood Blocking (")
	-3	1x Wood Continuous (")
	-4	Plywood (")
	-5	#30 Felt
	-6	#15 Felt
	-7	Sheathing (")
064116	-1	Interior Architectural Woodwork
	-2	High Pressure Laminate
	-3	Cabinet Liner Laminate
	-4	Particle Board
	-5	Plywood
	-6	3mm Edge Molding
	-7	Solid Wood Blocking
	-8	Hardwood
	-9	Steel Tube/Leg Frame
	-10	Door Hinge
	-11	Door/Drawer Pull
	-12	Magnetic Catch
	-13	Drawer
	-14	Shelf Supports
	-15	Countertop
	-16	Solid-Surfacing Material
071113	-1	Bituminous Dampproofing
071326	-1	Self-Adhering Sheet Waterproofing
072100	-1	Foundation Wall or Under Slab Insulation (R-)
	-2	Cavity Wall Insulation (R-)
	-3	Building Insulation - Unfaced (R-)
	-4	Building Insulation - Faced (R-)
	-5	Sill Sealer
	-6	Safing Insulation
072726	-1	Fluid Applied Membrane Air Barrier
	-2	Flashing Tape
074213	-1	Metal Wall Panel (Type 1)
	-2	Trim
	-3	Z-Furring (")
	-4	Metal Wall Panel (Type 2)
	-5	Metal Soffit Panel
075423	-1	Thermoplastic Polyolefin (TPO) Roofing
	-2	Roof Insulation Flat
	-3	Roof Insulation Tapered
	-4	Roof Expansion Joint
	-5	Coverboard
	-6	Walkway Protection Board
076200	-1	Sheet Metal Flashing and Counterflashing
	-2	Pre-Finished Roof Edge
	-3	Pre-Finished Coping
	-4	Sheet Metal Reglet
	-5	Sheet Metal Gutter
	-6	Sheet Metal Downspout
	-7	Sheet Metal Scupper
077129	-1	Roof Expansion Joint
077200	-1	Roof Hatch/Ladder
078413	-1	Penetration Firestopping
078443	-1	Joint Firestopping
079200	-1	Sealant - Rake where required
	-2	Joint Filler
	-3	Gasket
	-4	Backer Rod
079500	-1	Expansion Control
081113	-1	Steel Door
	-2	Steel Frame
	-3	Frame Anchor
	-4	Louver
	-5	Plaster Guard
	-6	FPR Door
081416	-1	Flush Wood Door
083113	-1	Access Door
	-2	Access Door Frame
	-3	Floor Access Door
083323	-1	Overhead Coiling Door
	-2	Coiling Counter Door
083613	-1	Sectional Overhead Door
	-2	Sectional Overhead Door Track
	-3	Weatherstripping
084113	-1	Aluminum Entrance Door
	-2	Aluminum Entrance Frame
	-3	Sunshade
	-4	Aluminum Subsill
084413	-1	Glazed Aluminum Curtain Wall
	-2	Threshold
	-3	Sunshade Louver
	-4	Aluminum Subsill
087100	-1	Track Hardware
088000	-1	Glazing (as scheduled)
088853	-1	Securtiy Glazing (as scheduled)
089119	-1	Louvers and Vents
092216	-1	Steel Stud (")
	-2	Steel Stud Runner (")
	-3	Furring Channel (")
092400	-1	Portland Cement Plastering
	-2	Metal Lath
	-3	Casing Bead
092900	-1	Gypsum Board (")
	-2	Fire Rated Gypsum Board (")
	-3	Cementitious Tile Backer Panel
	-4	Metal Suspension System
	-5	Acoustical Sealant
	-6	Acoustical Insulation (")
	-7	Metal Edge Trim
	-8	Auxiliary Support Framing
	-9	Metal Control Joint
	-10	High Impact Gypsum Board
	-11	Concrete Interior Finishing Compound
	-12	Stiffener
093000	-1	Porcelain Wall Tile (" x ")
	-2	Shower Pan
	-3	Shower Pan Flashing
	-4	Porcelain Floor Tile (" x ")
	-5	Tile Base
	-6	Tile Cap
	-7	Setting Bed
	-8	Uncoupling water-proof membrane
	-9	Shower Splashguard
	-10	Shower Niche
095113	-1	Acoustical Panel ('x ') (F = Fire Rated)
	-2	Ceiling Suspension System
	-3	Edge Mold Trim
	-4	Auxiliary Support Framing
096513	-1	Resilient Tile Flooring
	-2	Resilient Wall Base
	-3	Edge Strip
	-4	Tactile Warning Surface
	-5	Resilient Stair Tread
	-6	Resilient Stair Riser
	-7	Resilient Stringer Skirt
	-8	Resilient STair Nose
096813	-1	Carpet Tile
096900	-1	Access Flooring
099113	-1	Exterior Painting
099123	-1	Interior Painting
099635	-1	Secondary Containment Coating System
101400	-1	Signage
102113	-1	Toilet Partition
	-2	Urinal Screen
102213	-1	Wire Mesh Partitions
102600	-1	Impact-Resistant Cornerguard
102800	-1	Tissue Dispenser
	-2	Framed Mirror
	-3	Sanitary Napkin Disposer
	-4	Grab Bar
	-5	Shower Seat
	-6	Shower Curtain Rod
	-7	Coat/Robe Hook
	-8	Shower Curtain
104413	-1	Fire Extinguisher Cabinet
104416	-1	Fire Extinguisher
105113	-1	Personnel Locker
	-2	Locker
	-3	Bench
105300	-1	Pre- Manufactured Canopies
107500	-1	Flagpole
108113	-1	Deterrent Spikes
122413	-1	Roller Window Shades
133600	-1	Spray Painting Booth
142400	-1	Hydraulic Elevator
311000	-1	Site Clearing
312000	-1	Earth Moving
	-2	Interior Fill
	-3	Exterior Fill
	-4	Granular Drainage Course
	-5	Subbase Course
321313	-1	Concrete Paving
334600	-1	Perforated Wall Pipe & Fittings
	-2	Geotextile Filter Fabric (Flat/Sock)
	-3	Drainage Panel

NOTE: REFER TO STRUCTURAL DRAWINGS FOR REINFORCING STEEL IN EXTERIOR WALLS AND CONCRETE NOT SHOWN

NOTE: REFER TO ALL DETAILS (DETAILS LOCATED ON THIS SHEET, PRECEEDING SHEETS AND FOLLOWING SHEETS) FOR APPLICABLE NOTES NOT SHOWN

NOTE: REFER TO ALL SECTIONS (SECTIONS LOCATED ON THIS SHEET, PRECEEDING SHEETS AND FOLLOWING SHEETS) FOR APPLICABLE NOTES NOT SHOWN

HTK ARCHITECTS PA
900 S. KANSAS AVE., SUITE 200
TOPEKA KANSAS 66612
P 785.266.5373
9300 W 110TH ST. STE. 150
OVERLAND PARK, KANSAS 66210
P 913.663.5373
www.htkarchitects.com

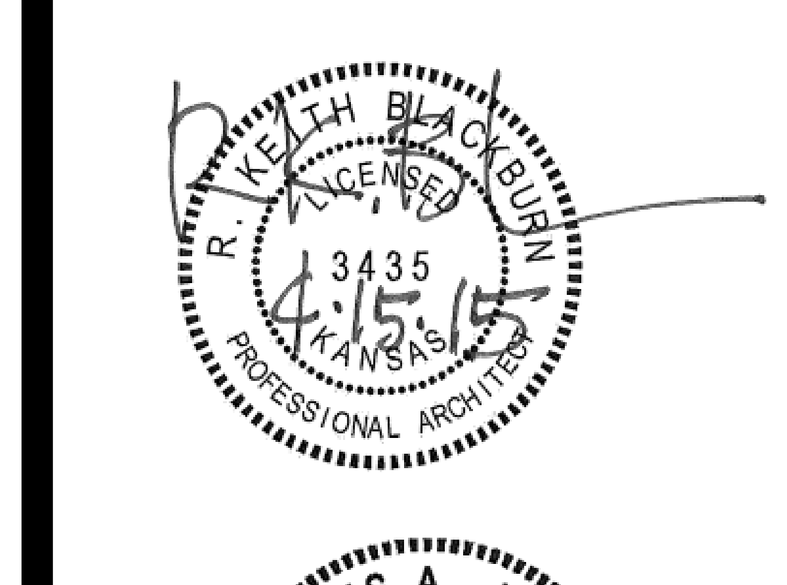



DATE:
- 4-15-15

REVISED DATE:
- 12-18-14
- 2-9-15
- 3-10-15
-

HTK PROJECT NUMBER:
- 1410.03

Department of Administration
Office of Facilities and Procurement Management
800 SW Jackson, Suite 700
Topeka, Kansas 66612-1216
Phone 785-296-8899
FAX 785-296-3456

STATE OF KANSAS
STATE OF KANSAS ENERGY & SERVICE CENTER
221 SW 7th Street
BUILDING NUMBER 17300-0038

DATE: 4-15-15 DRAWN BY: Author CHECKED BY: Checker REV:

STAIR DETAILS

A-012651

A306

CONSTRUCTION DOCUMENTS

4/16/2015 11:10:42 AM C:\Users\jms\Documents\REVIT\State of Kansas Energy_Central_jms.rvt

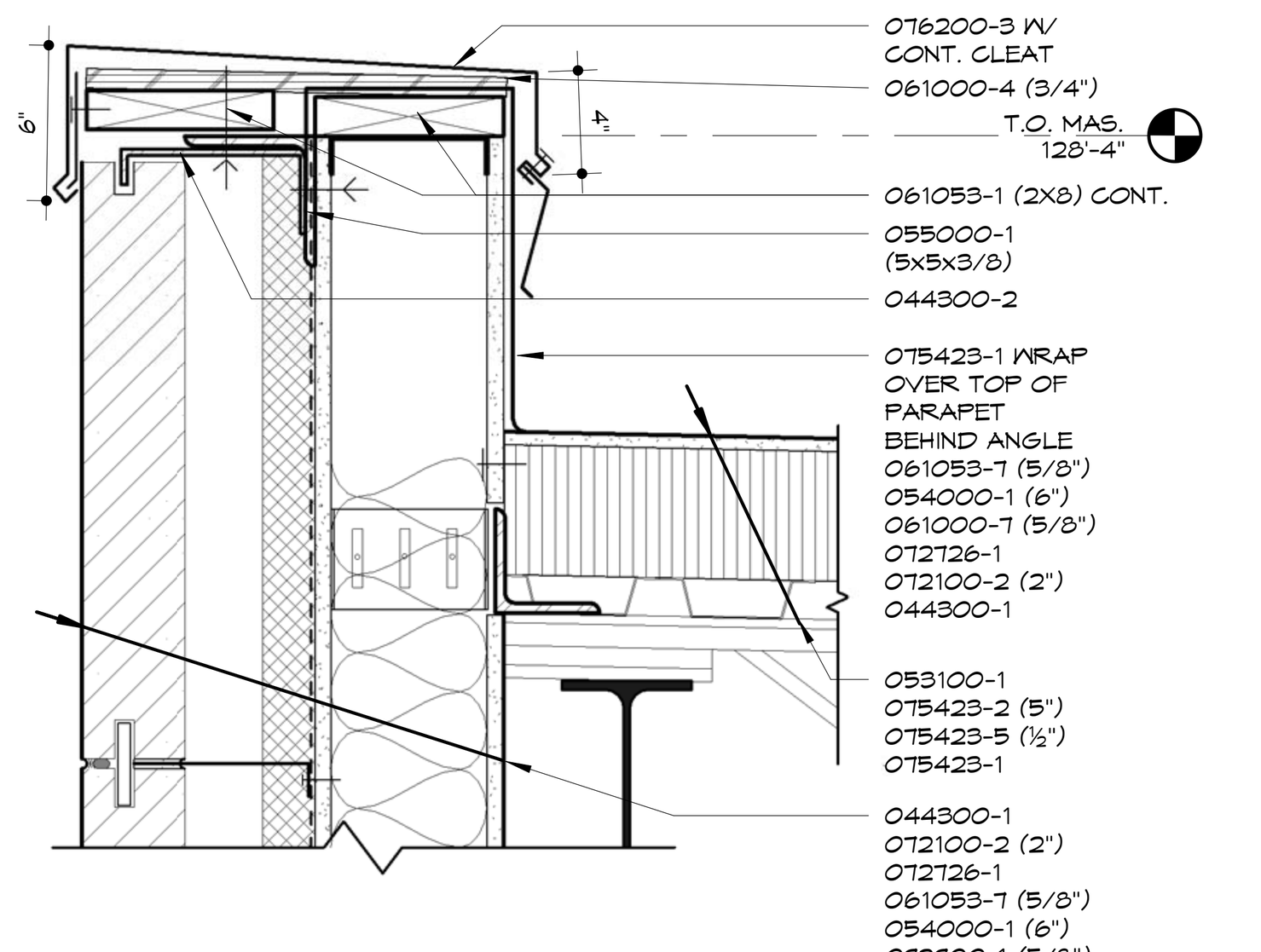

1 T.O. MASONRY WALL
1 1/2" = 1'-0"

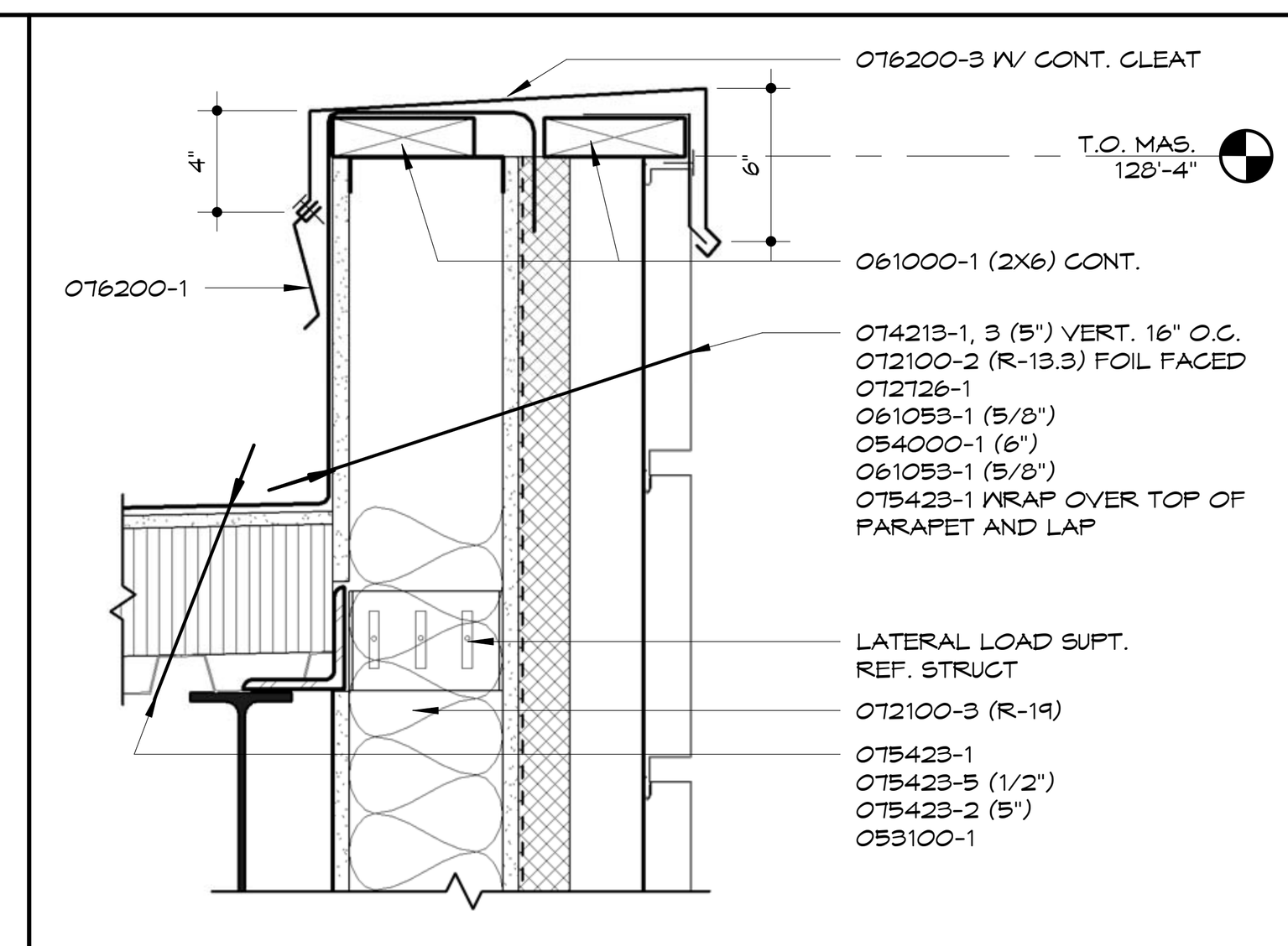

2 T.O. METAL WALL
1 1/2" = 1'-0"

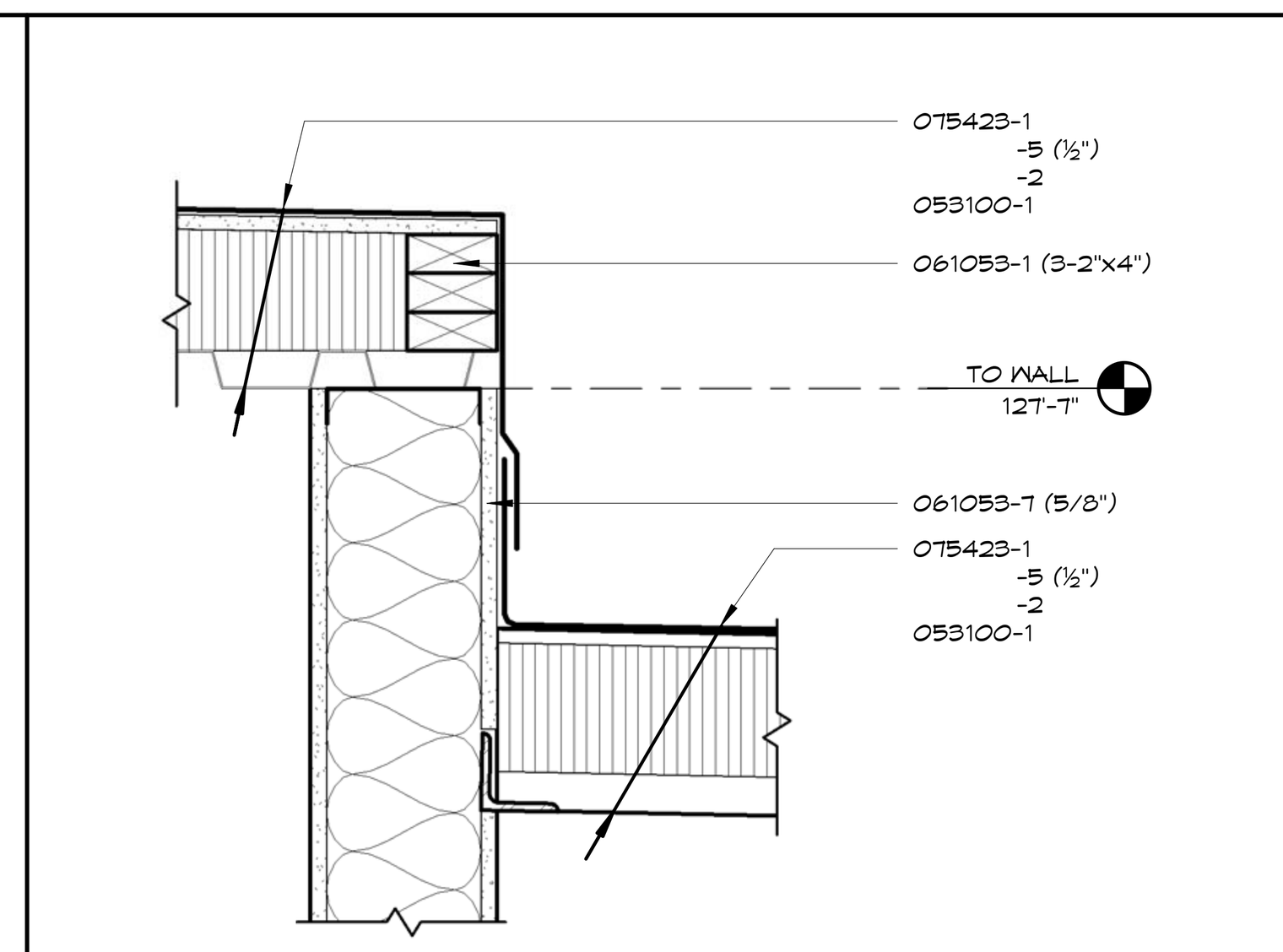

3 ELEVATOR ROOF
1 1/2" = 1'-0"

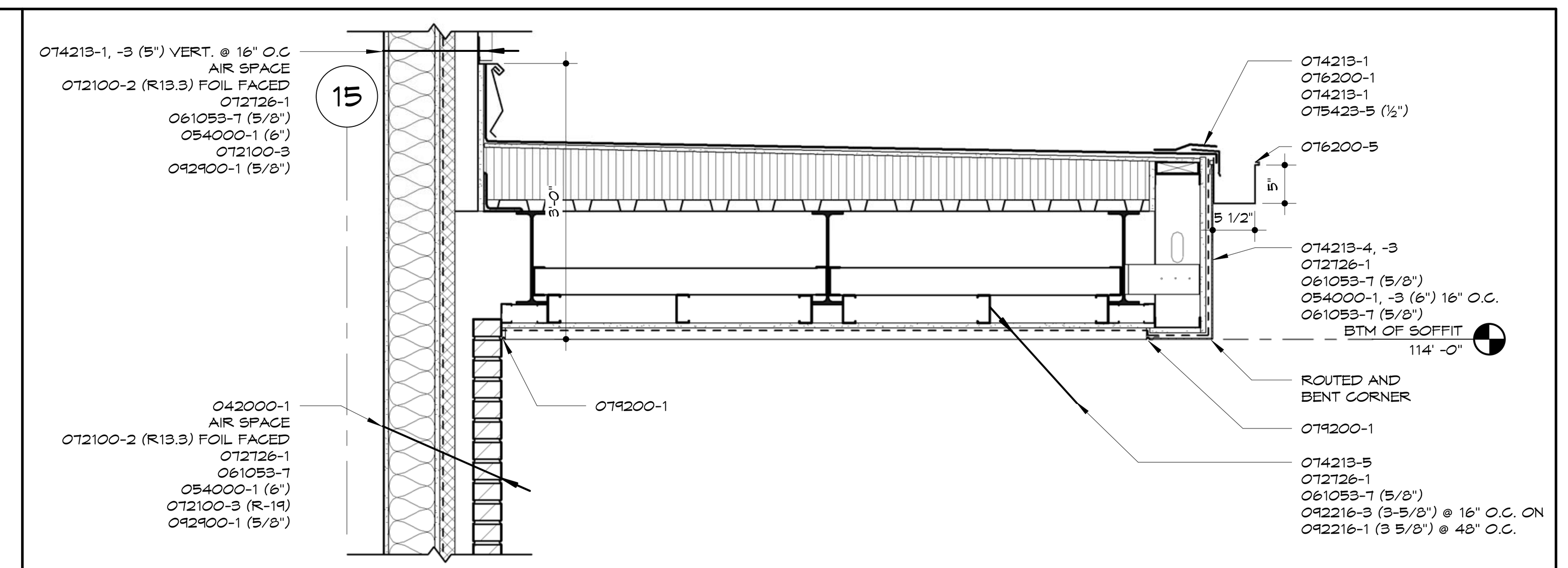

4 SOUTH CANOPY
3/4" = 1'-0"

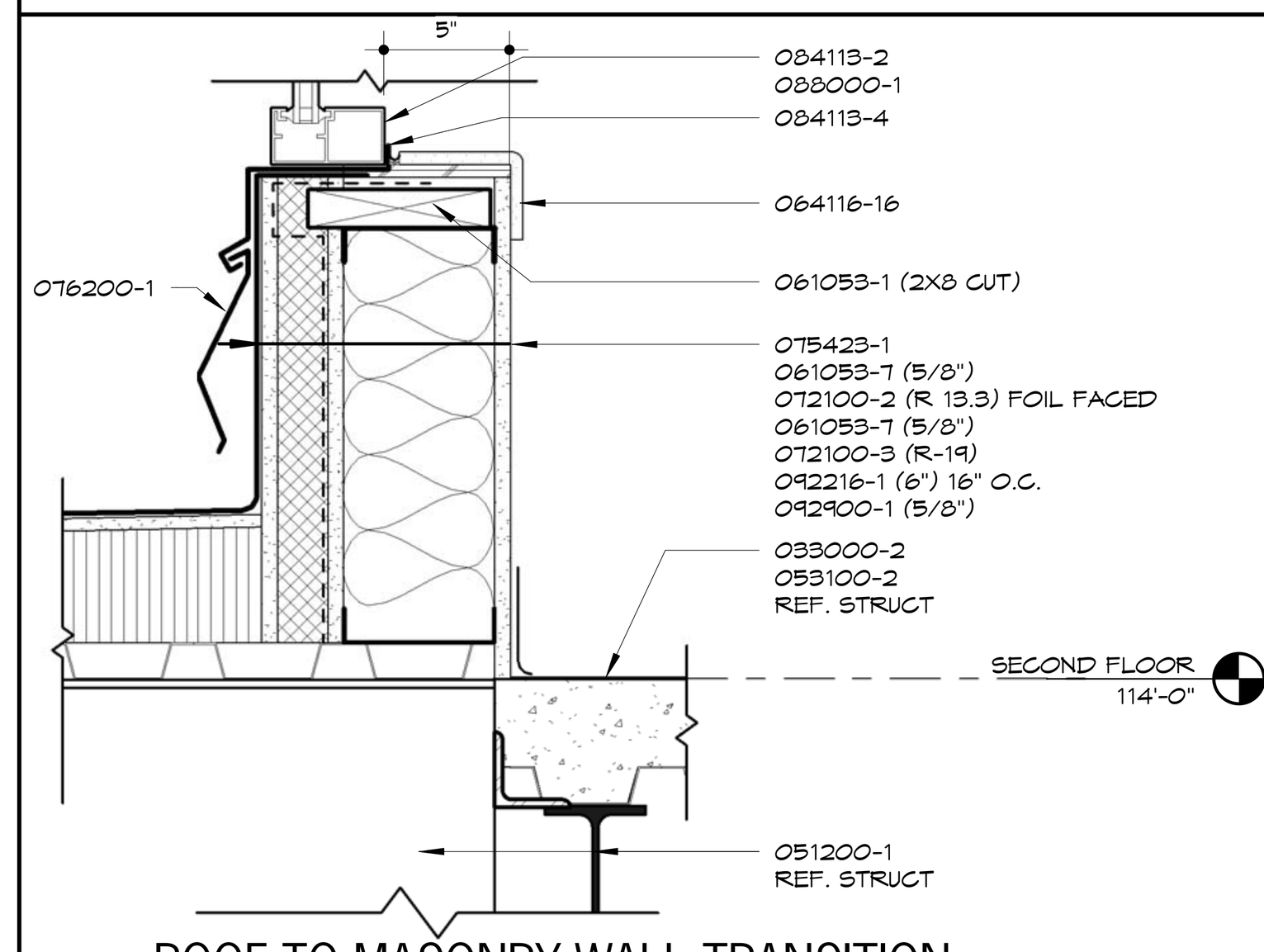

5 ROOF TO MASONRY WALL TRANSITION
1 1/2" = 1'-0"

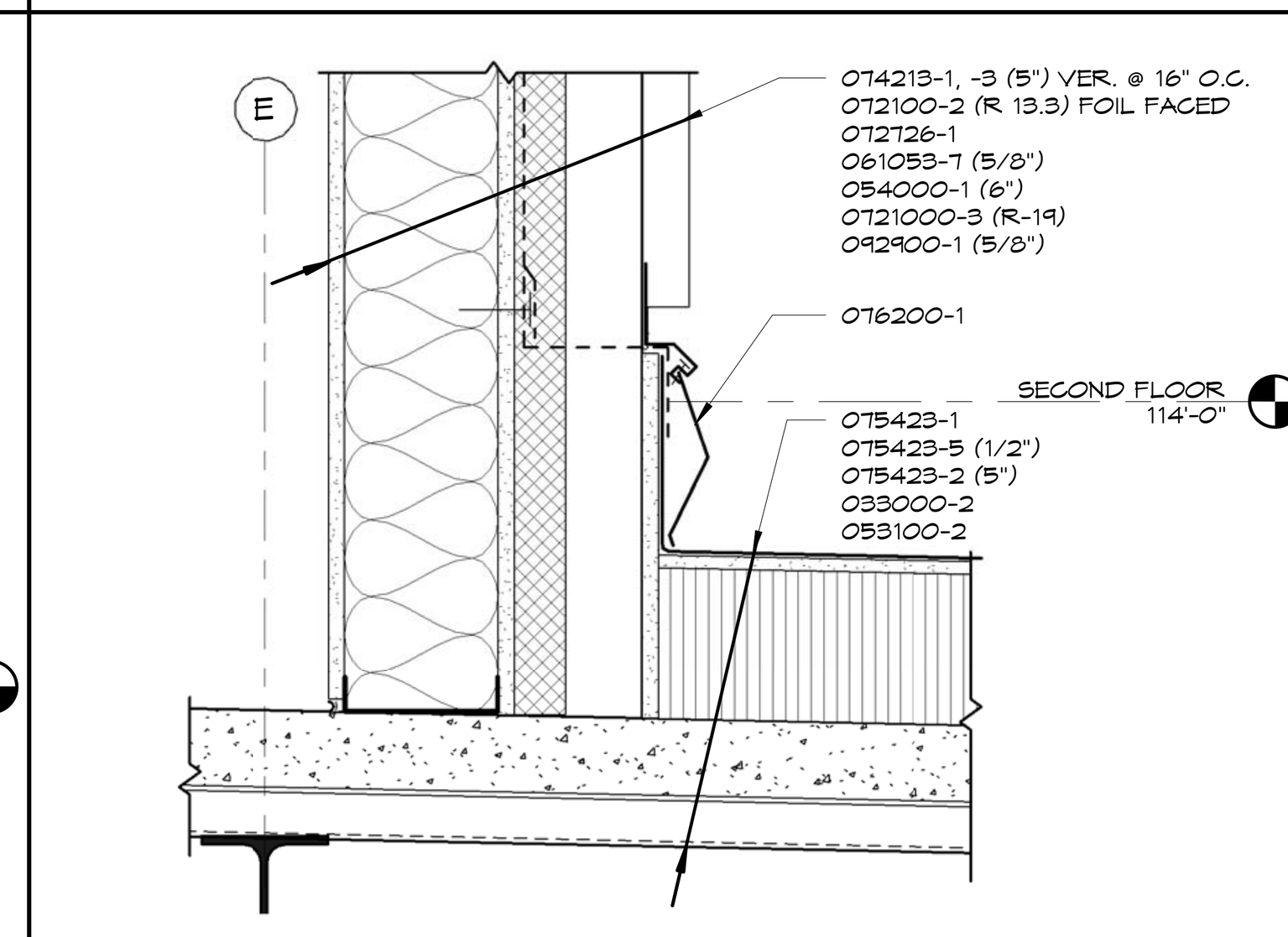

6 ROOF TRANSITION AT METAL WALL
1 1/2" = 1'-0"

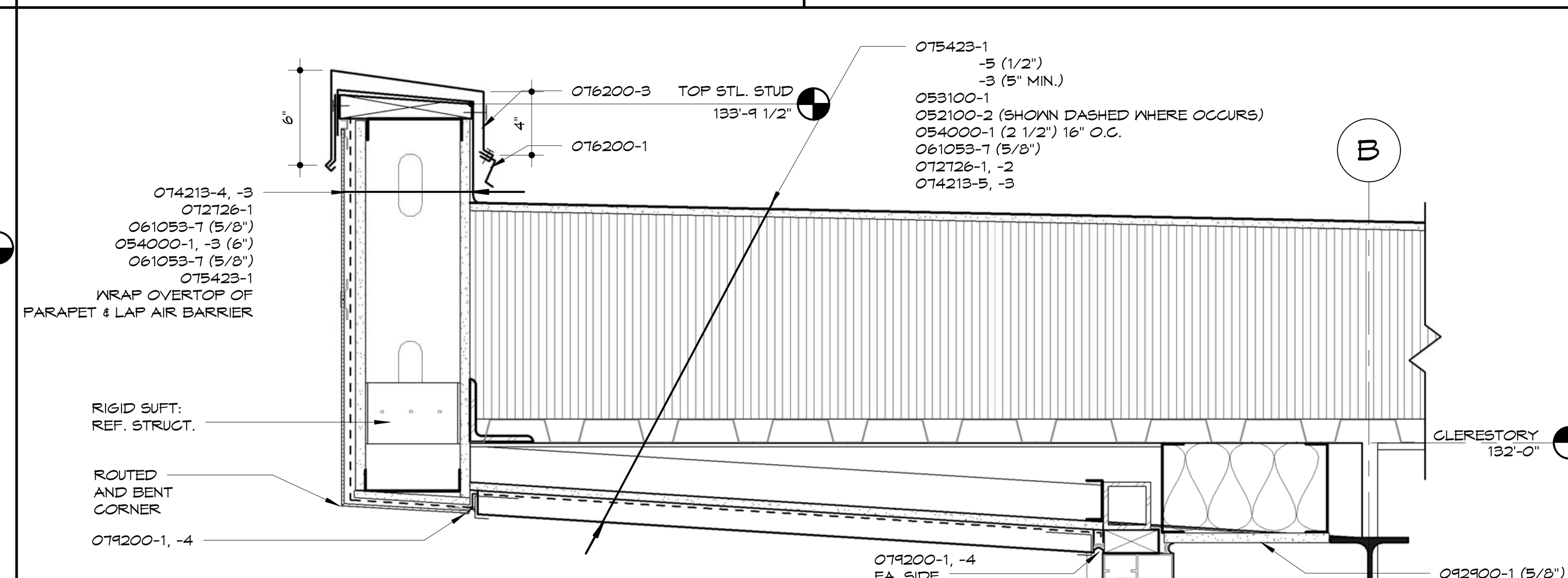

7 CLERESTORY OVERHANG EDGE
1 1/2" = 1'-0"

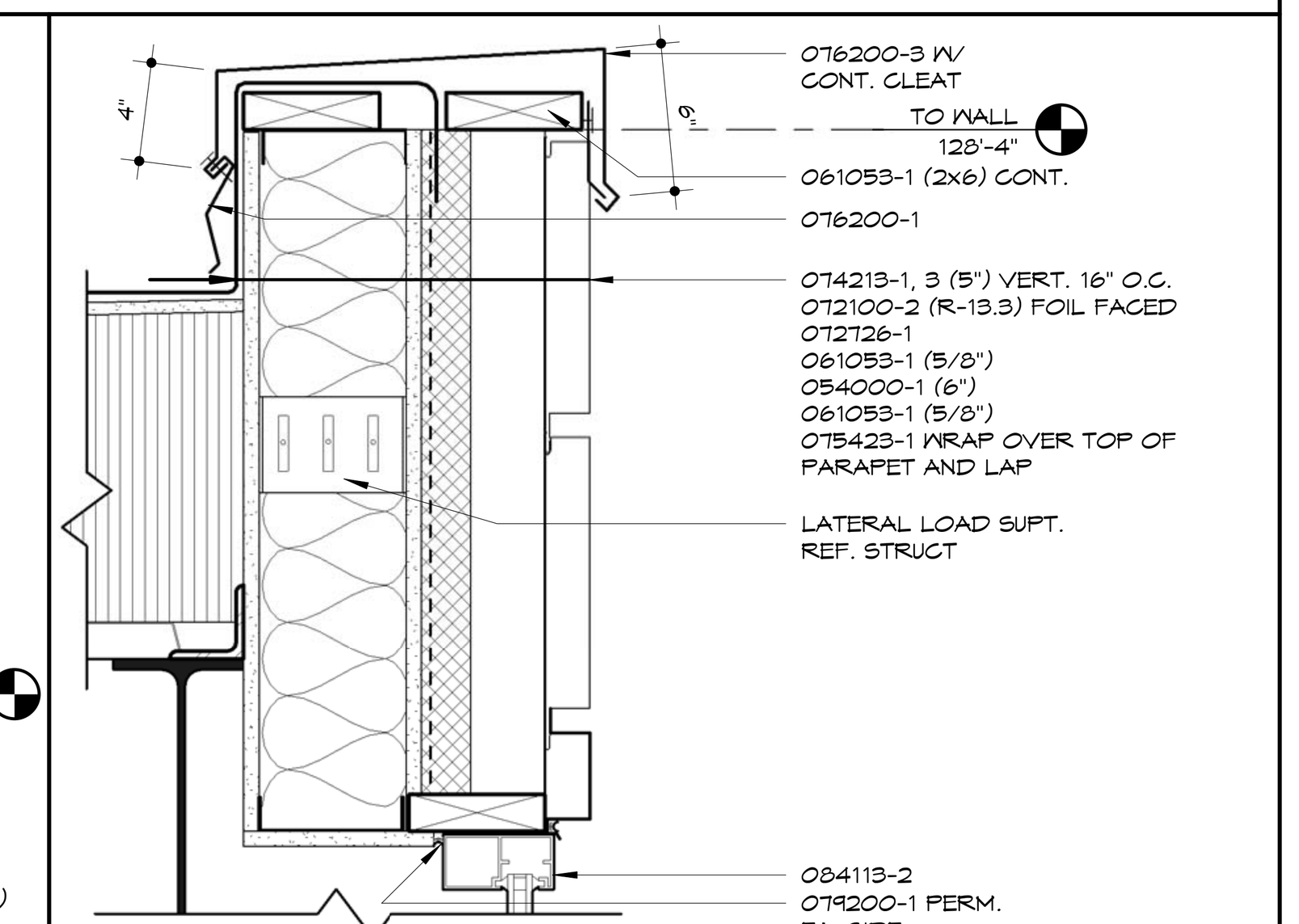

8 CLERESTORY EDGE
1 1/2" = 1'-0"

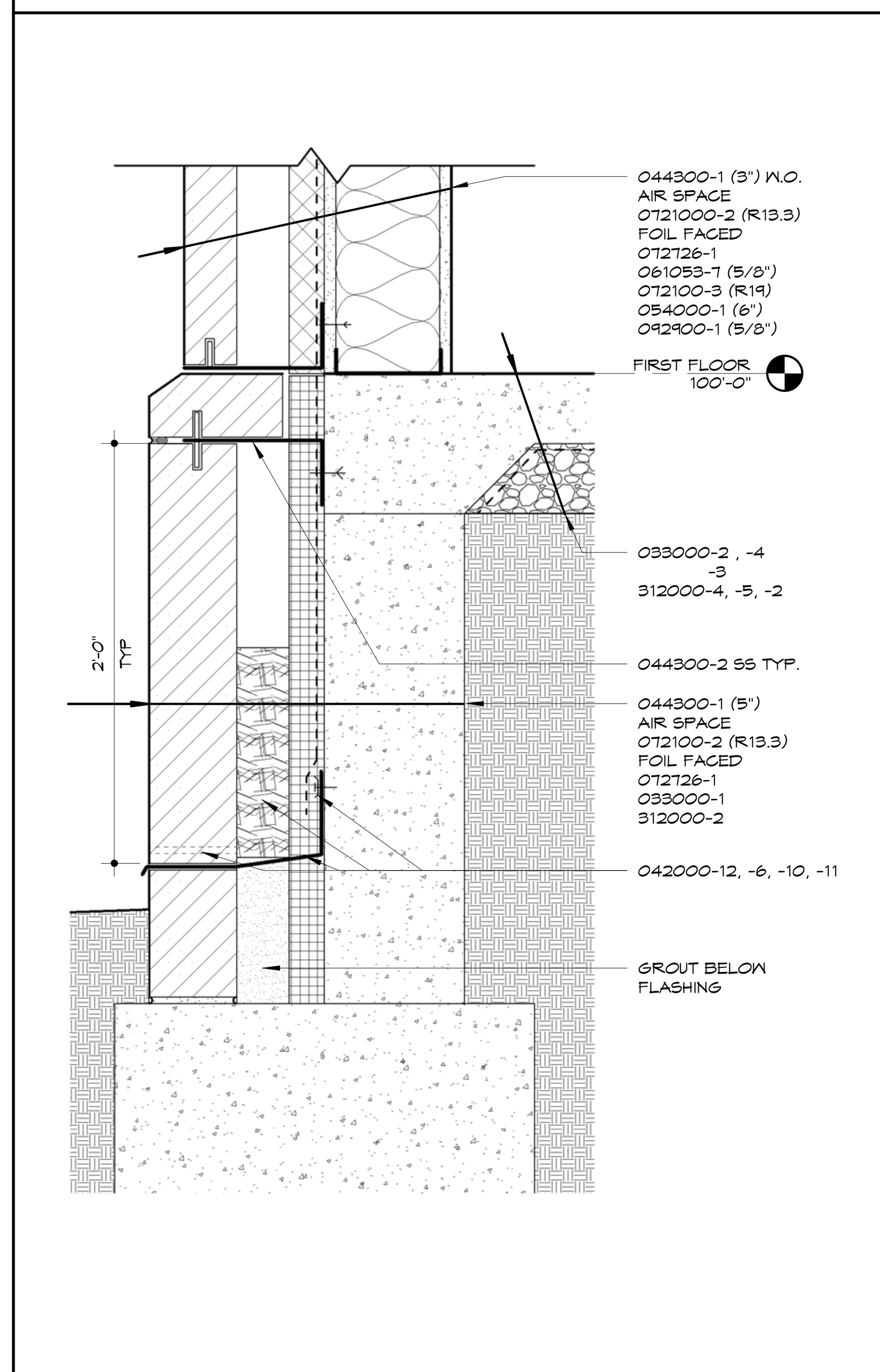

9 BTM OF WALL
1 1/2" = 1'-0"

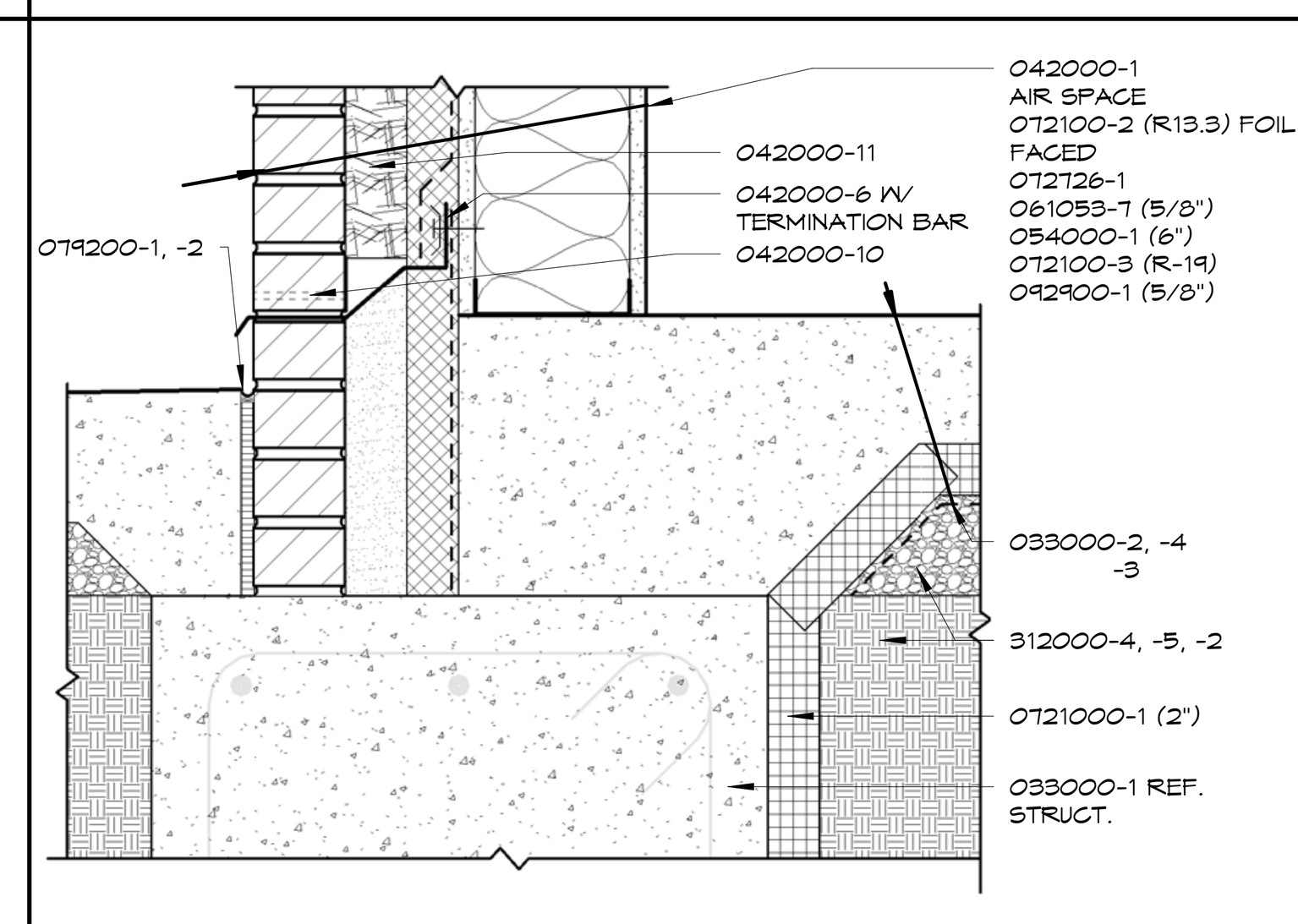

10 BTM OF WALL AT BRICK
1 1/2" = 1'-0"

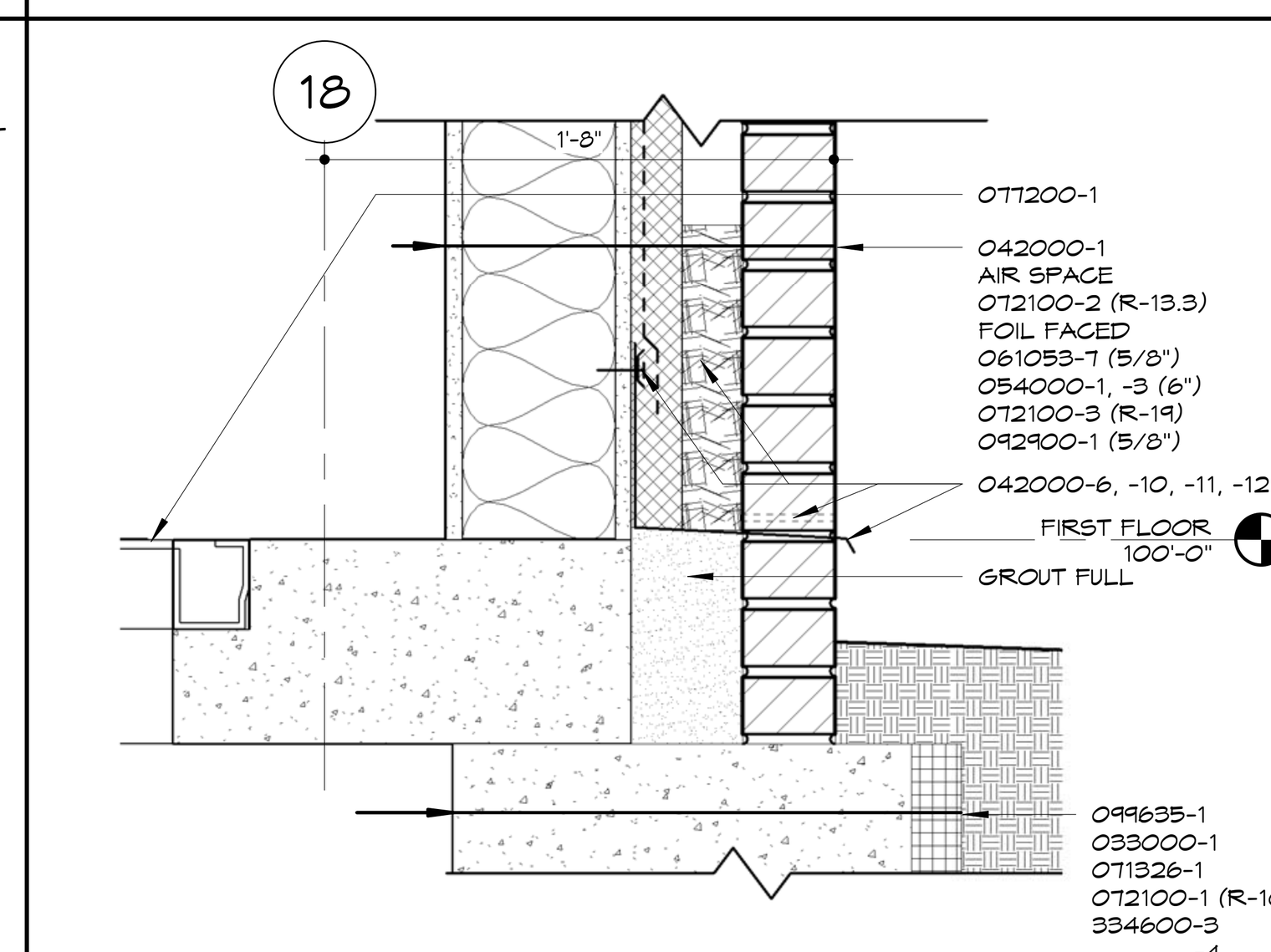

11 BTM OF WALL AT OPENING
1 1/2" = 1'-0"

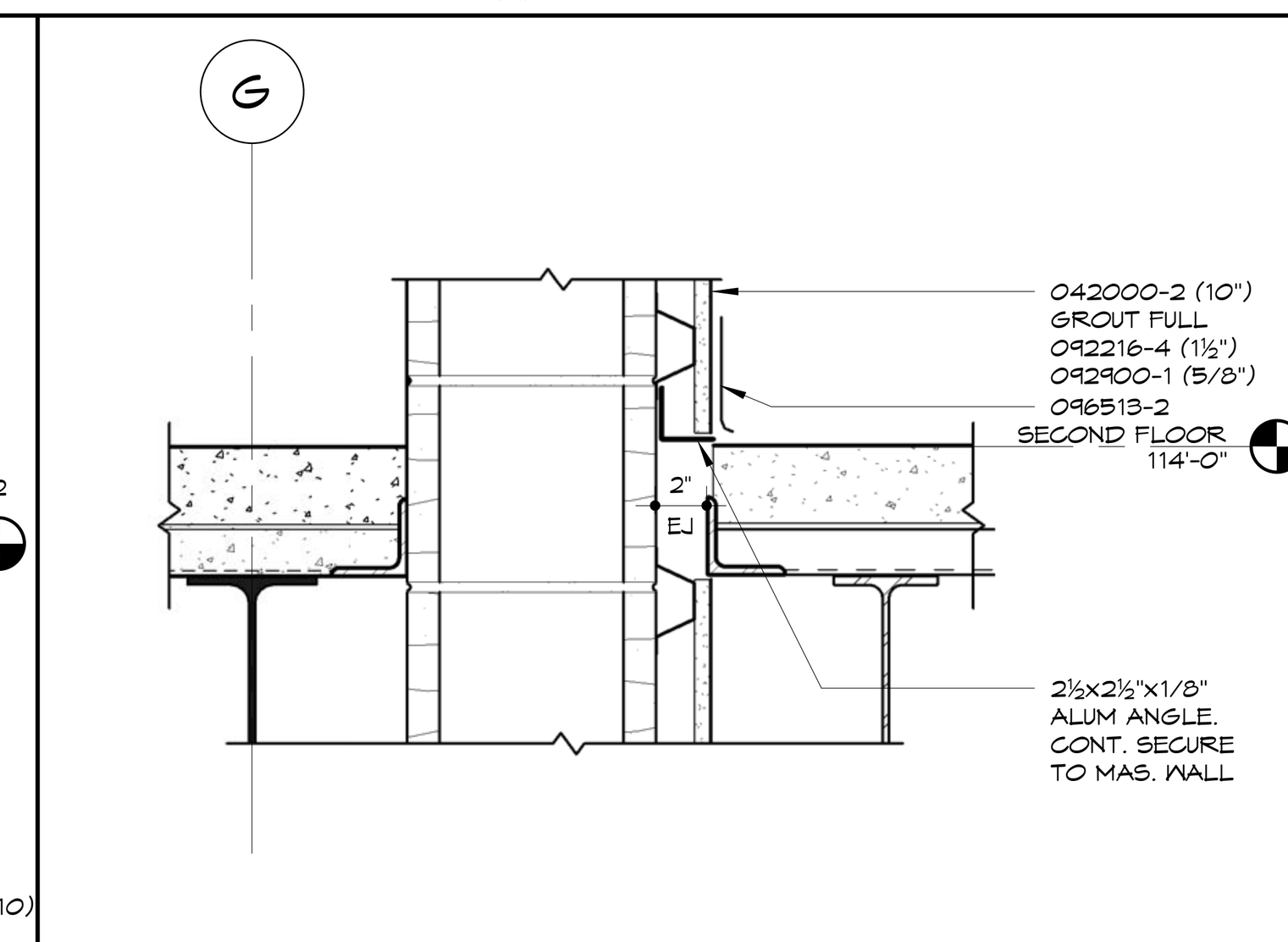

12 EXPANSION JOINT AT FLOOR
1 1/2" = 1'-0"

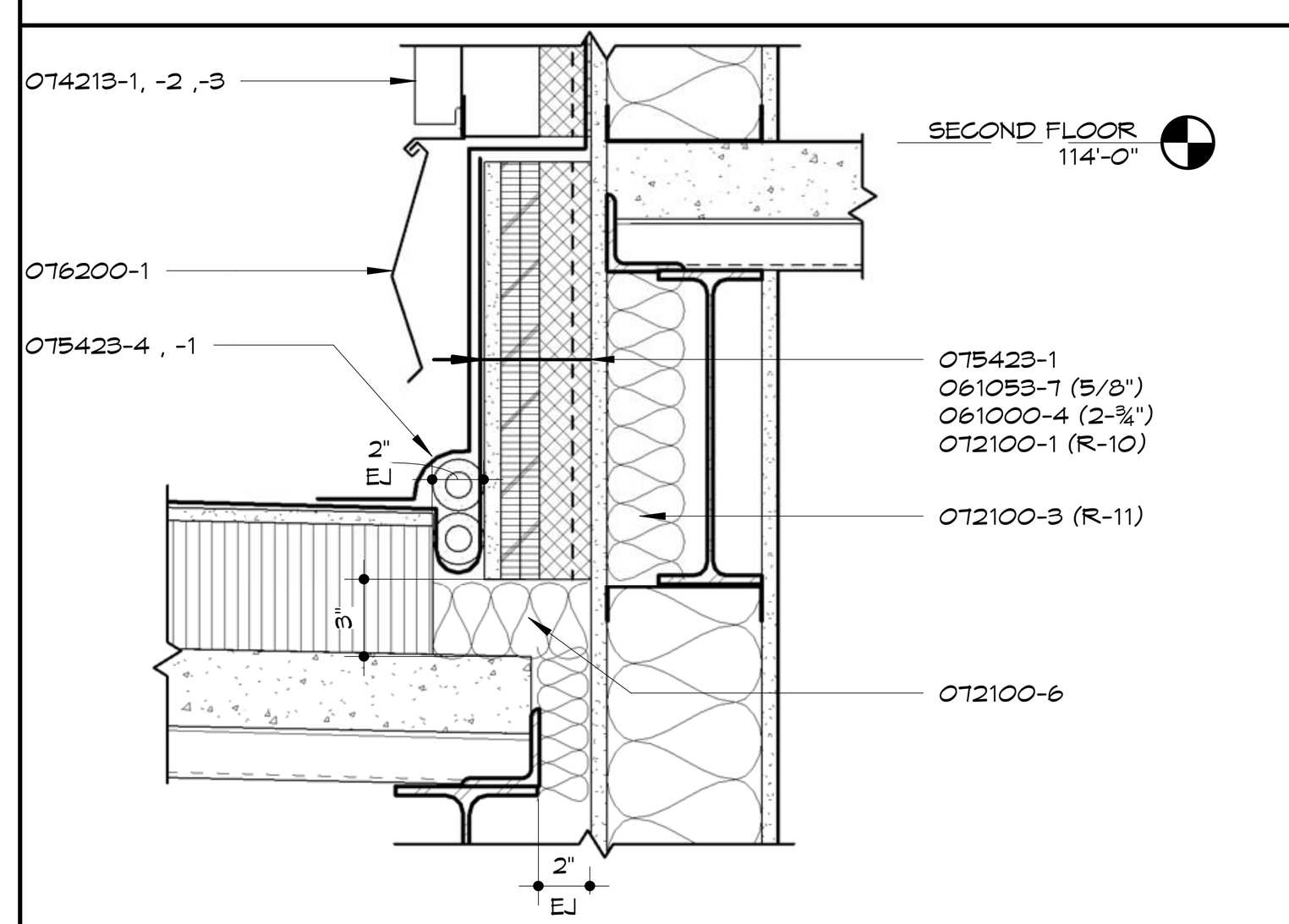

13 CHILLER ROOF EXPANSION JOINT
1 1/2" = 1'-0"

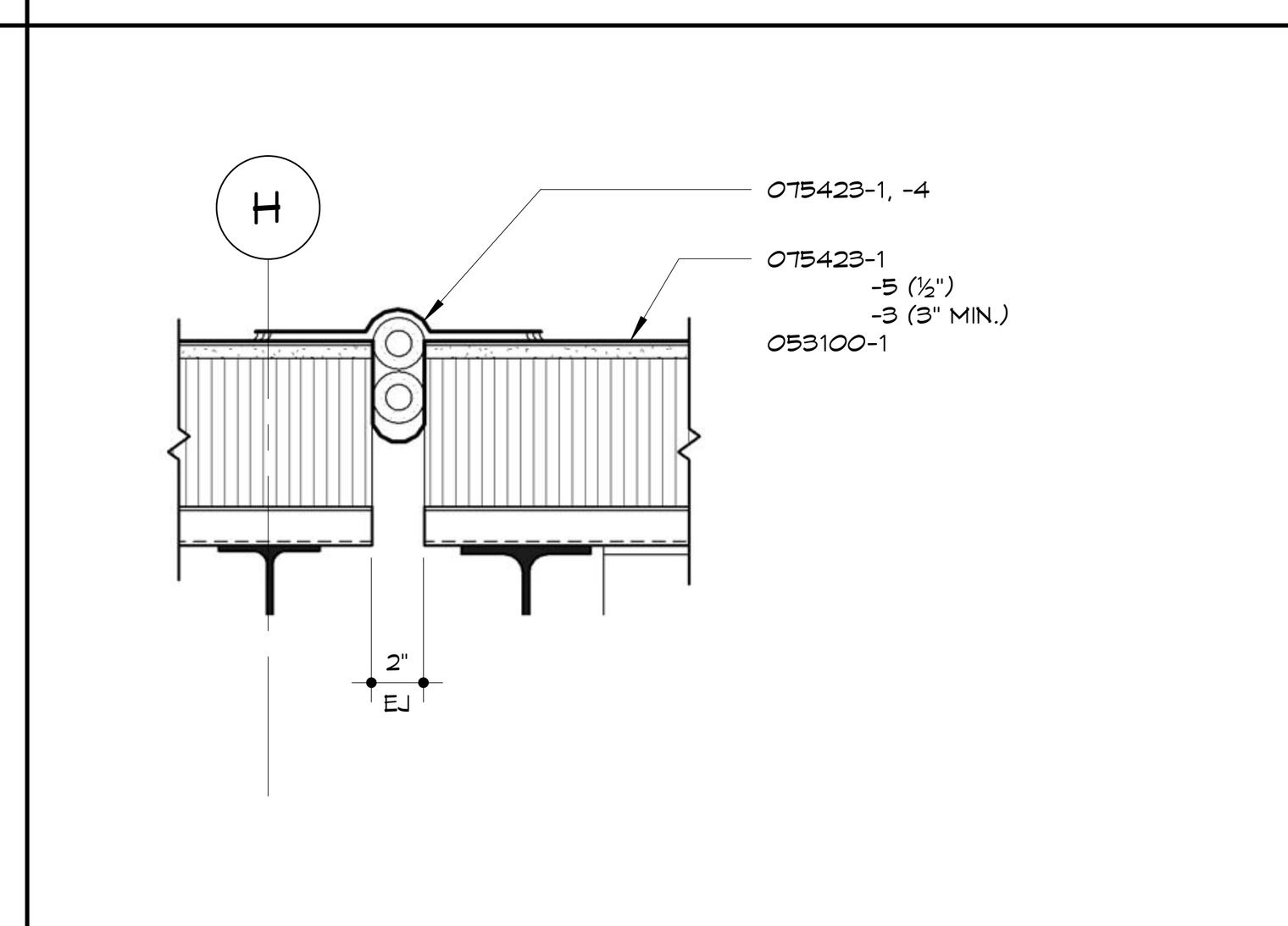

14 SOUTH ROOF EXPANSION JOINT
1 1/2" = 1'-0"

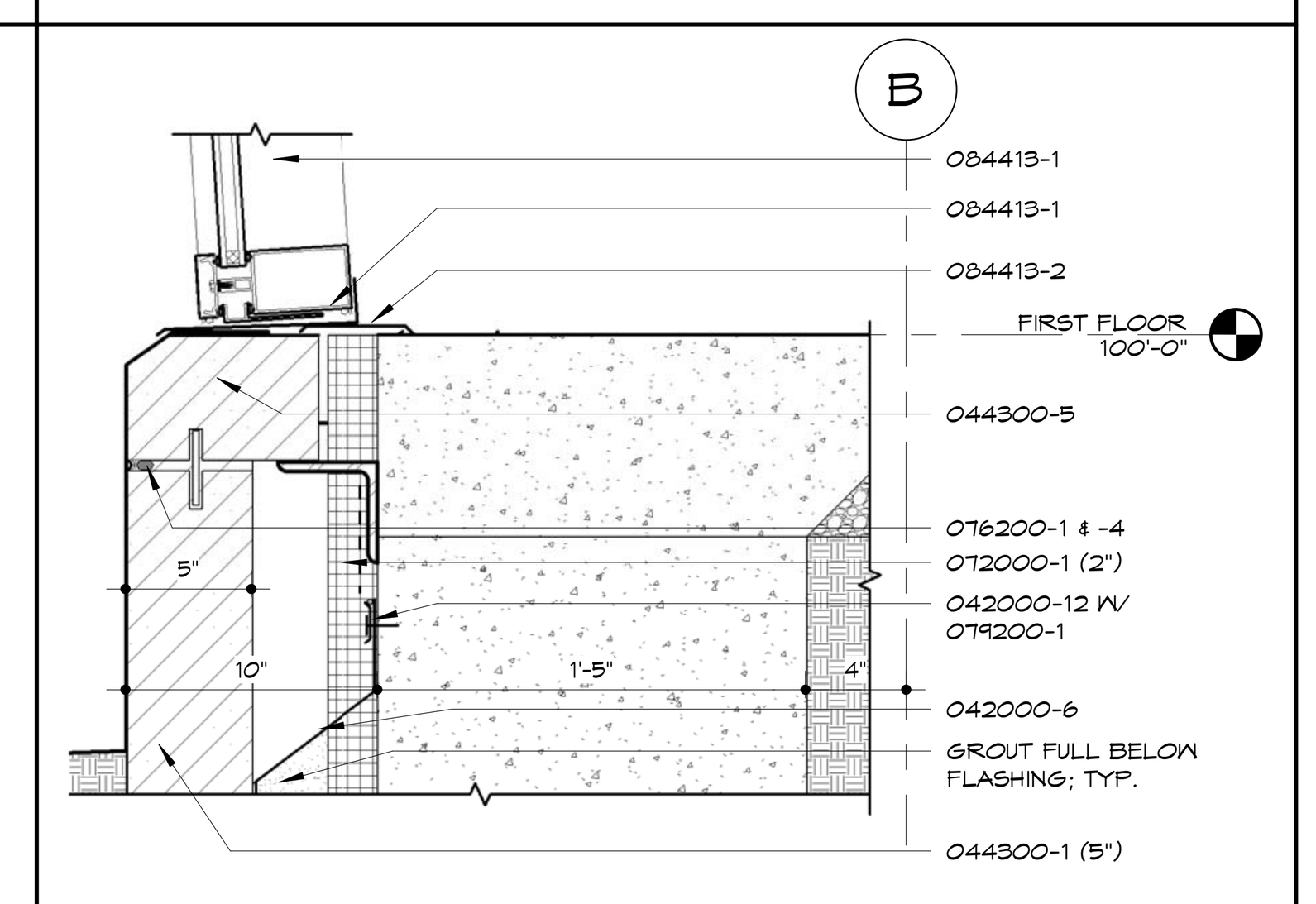

15 BTM OF SLOPED GLAZING
1 1/2" = 1'-0"

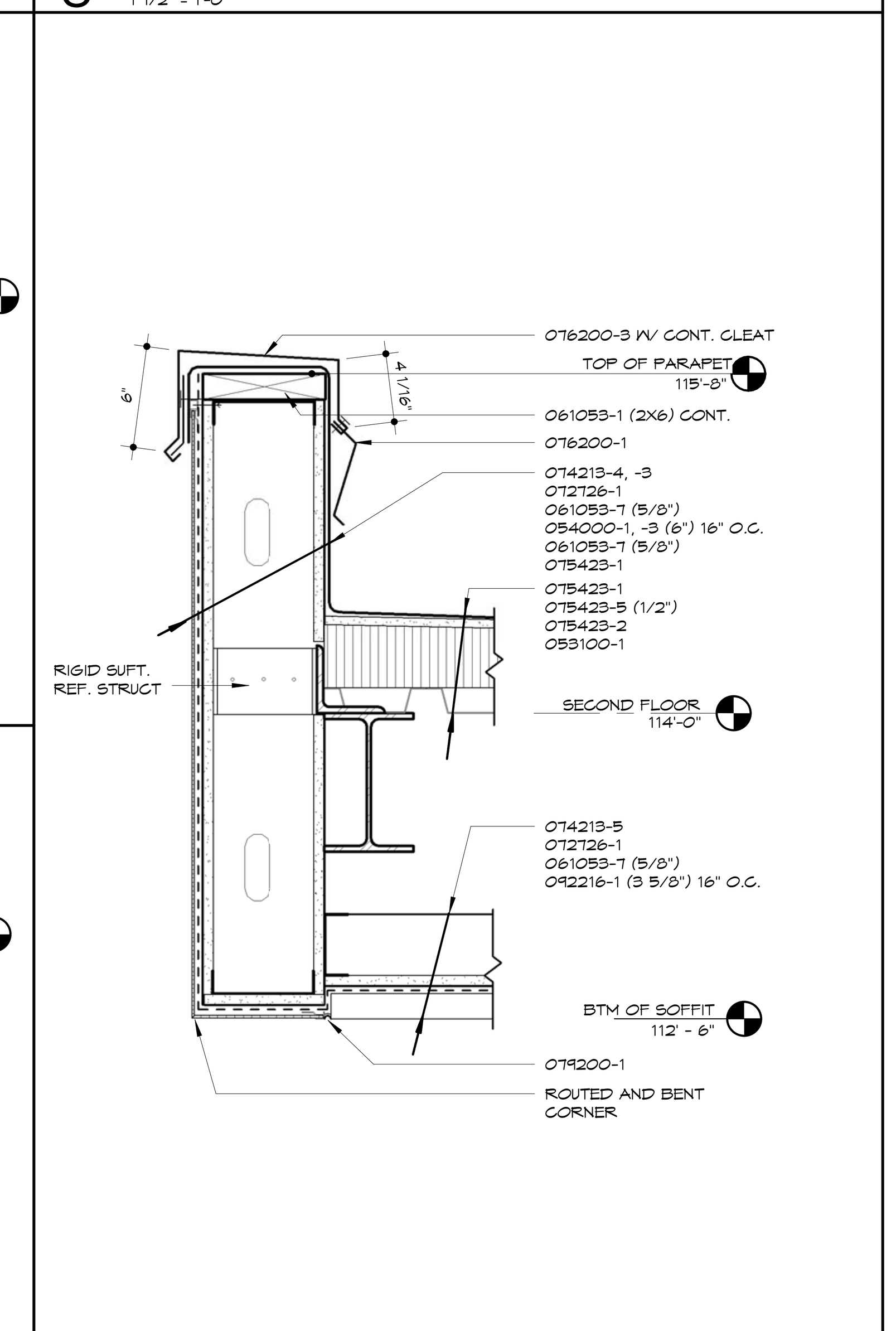

16 NORTH CANOPY EDGE
1 1/2" = 1'-0"

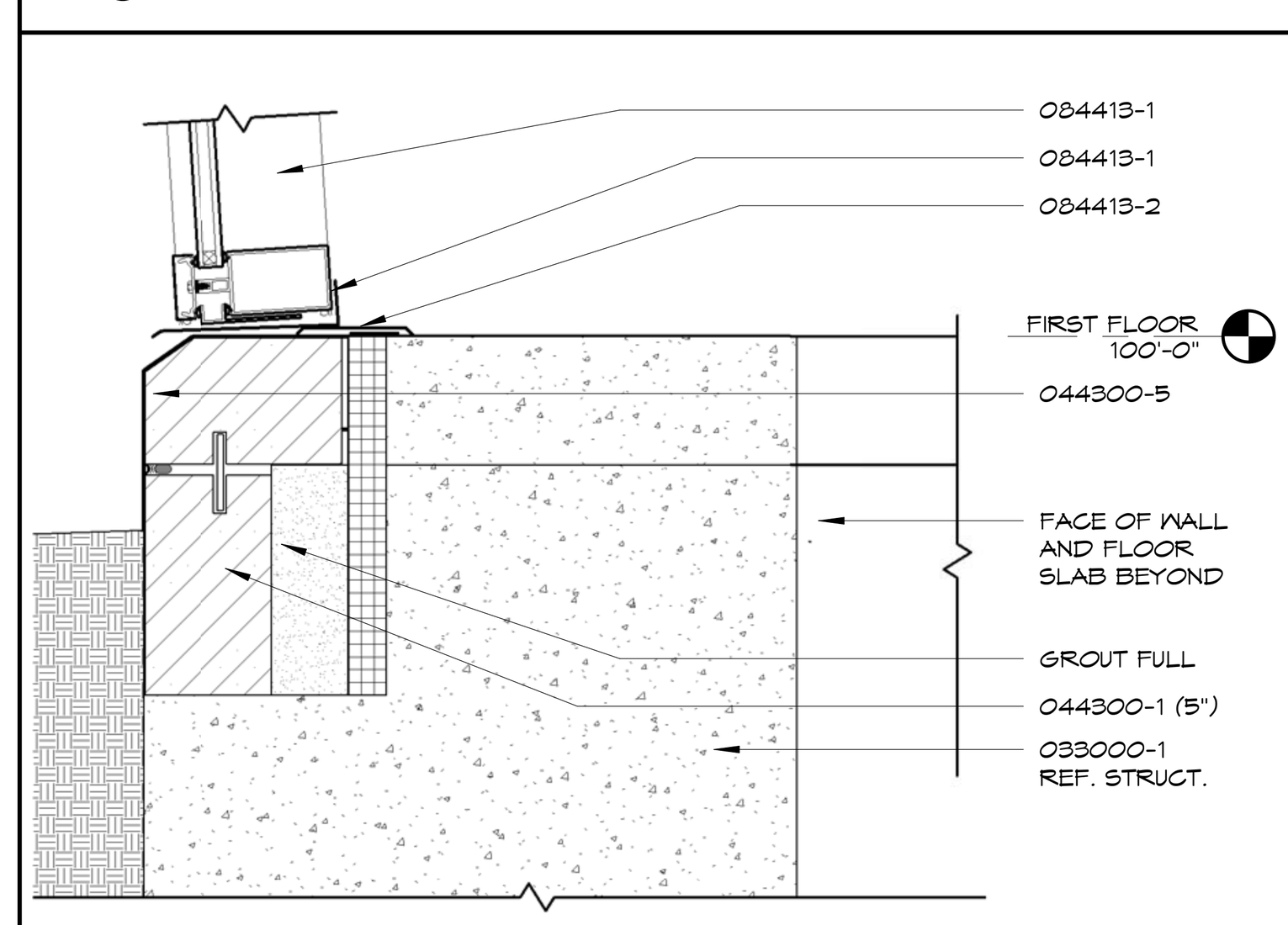

17 BTM OF SLOPED GLAZING AT TUNNEL ACCESS
1 1/2" = 1'-0"

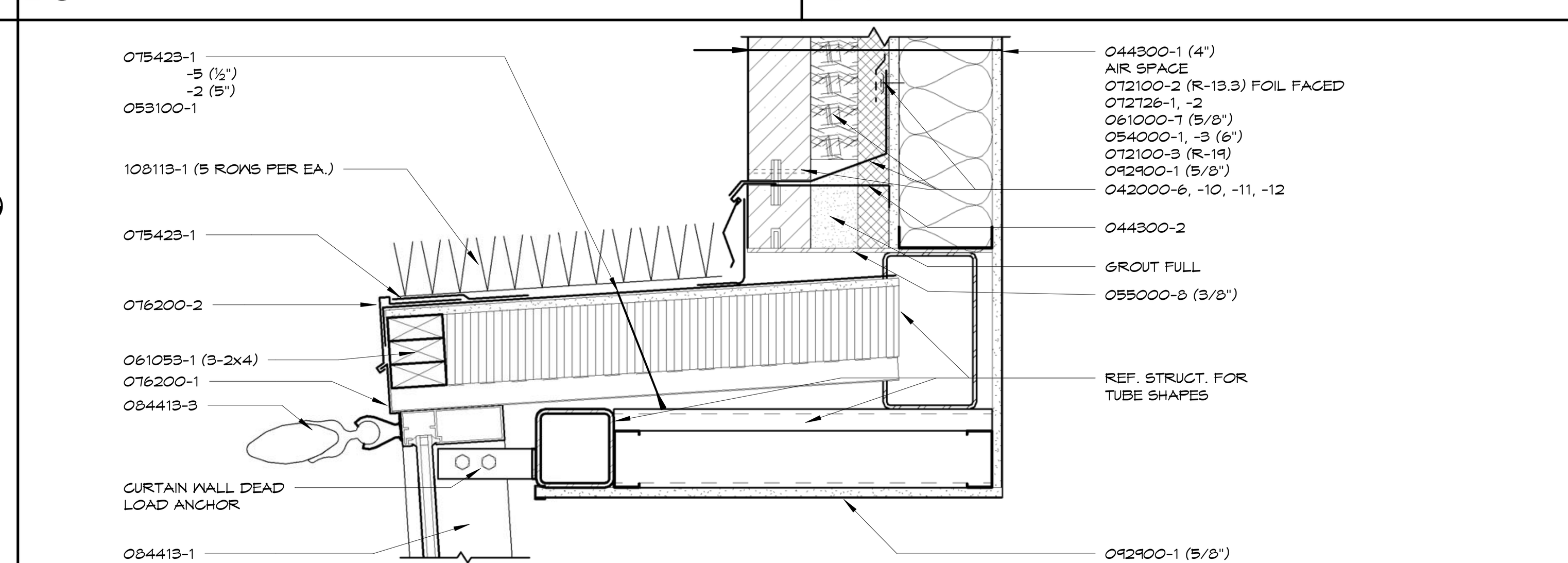

18 T.O. SLOPED GLAZING
1 1/2" = 1'-0"

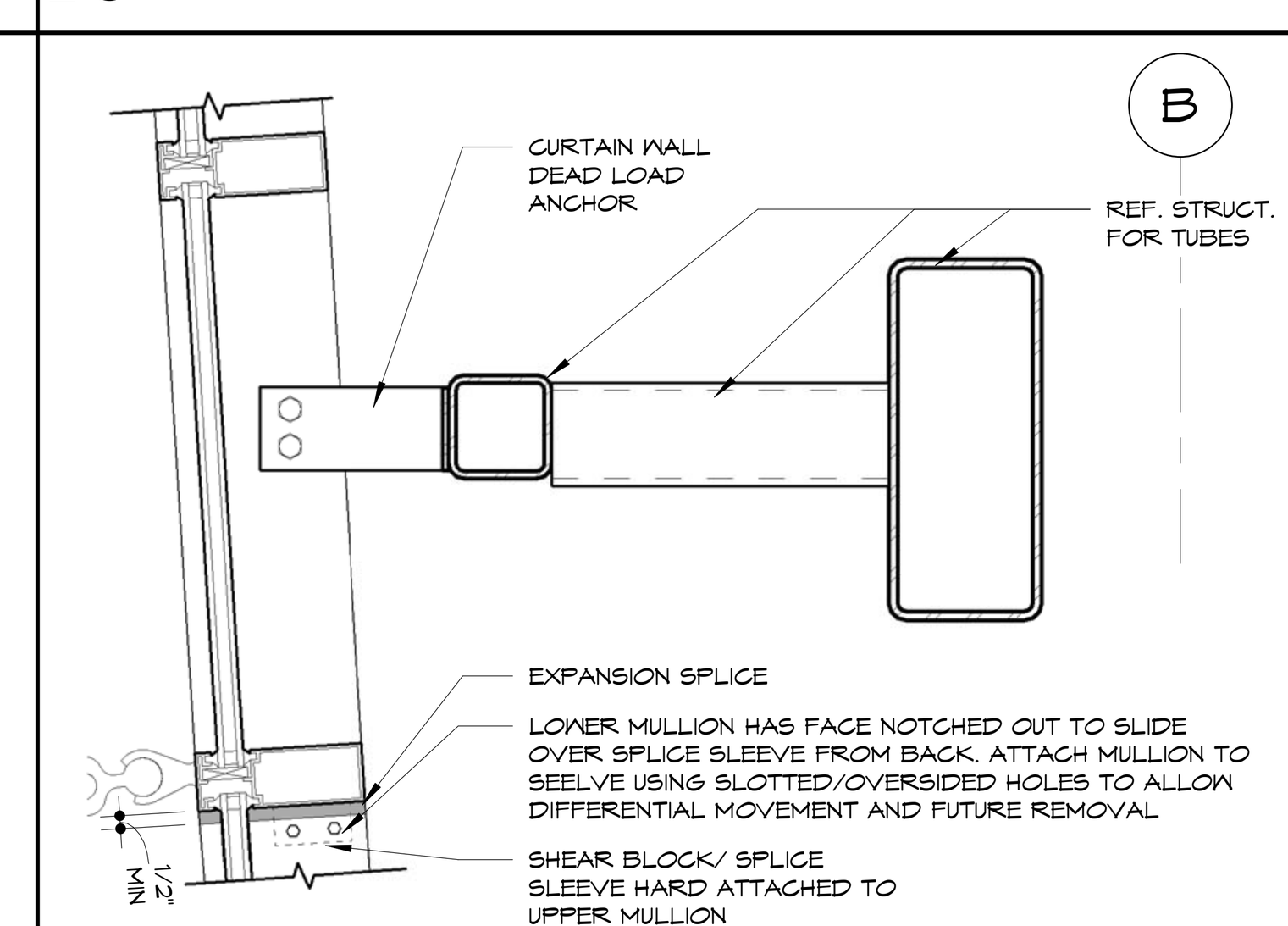

19 SLOPED GLAZING MID SUPPORT
1 1/2" = 1'-0"

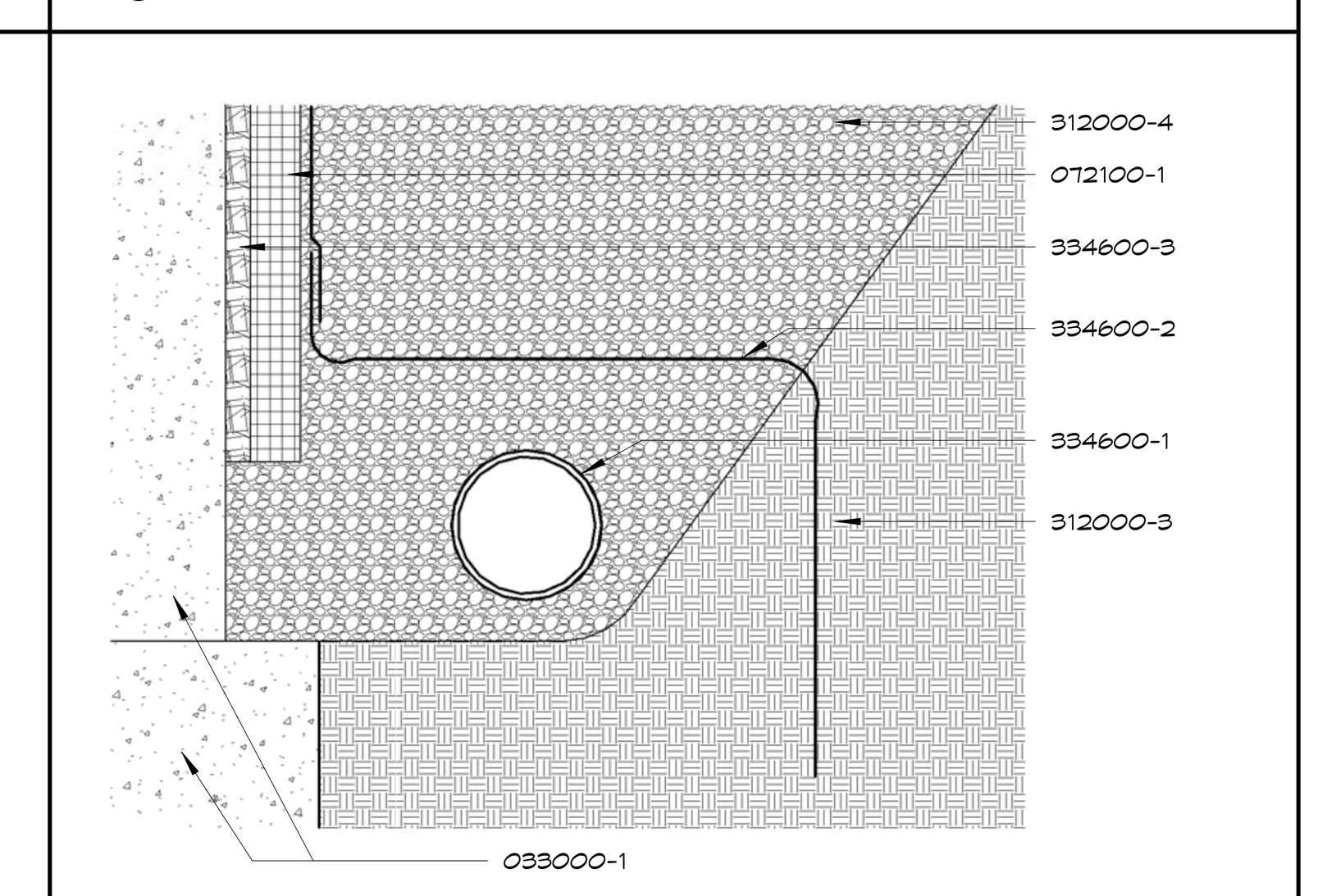

20 DRAINAGE AT UNDERGROUND WALLS
1 1/2" = 1'-0"

NOTE: REFER TO STRUCTURAL DRAWINGS FOR REINFORCING STEEL IN EXTERIOR WALLS AND CONCRETE NOT SHOWN

NOTE: REFER TO ALL DETAILS (DETAILS LOCATED ON THIS SHEET, PRECEEDING SHEETS AND FOLLOWING SHEETS) FOR APPLICABLE NOTES NOT SHOWN

NOTE: REFER TO ALL SECTIONS (SECTIONS LOCATED ON THIS SHEET, PRECEEDING SHEETS AND FOLLOWING SHEETS) FOR APPLICABLE NOTES NOT SHOWN

KEYNOTES

Note: Keynotes are drawn from a master list & may not be sequentially numbered. Sizes (Ex: 2x4) or other info. following keynote on drawings indicates criteria for those materials/locations which may differ from std. material specified.

033000	-1	Concrete Structure
	-2	Concrete Floor Slab
	-3	Vapor Barrier
	-4	Welded Wire Fabric
	-5	Steel Reinforcing Bar
	-6	Rustication Joint
	-7	Waterstop
	-8	Dovetail Anchor
	-9	Sidewalk
	-10	Premolded Joint Filler
035300	-1	Concrete Topping
042000	-1	Face Brick
	-2	Concrete Masonry Unit - Normal Weight (")
	-3	Concrete Masonry Unit - Lightweight (")
	-4	Wire Reinforcing
	-5	Metal Tie/Anchor
	-6	Through Wall Flashing
	-7	Control Joint Strip
	-8	Bond Beam (")
	-9	Compressible Filler
	-10	Weep Hole
	-11	Cavity Drainage Material
	-12	Termination Bar
044300	-1	Stone Masonry
	-2	Anchor
	-3	Stone Jamb
	-4	Stone Sill
	-5	Belt Course
047200	-1	Cast Stone
051200	-1	Steel Beams
	-2	Steel Column
	-3	Steel Tube
	-4	Steel Channel
052100	-1	Steel Joist
	-2	Joist - Extended End
	-3	Joist - Ceiling Extension
053100	-1	Metal Decking
	-3	Steel Composite Decking
	-2	Flexible Closure Strips
054000	-1	Structural Steel Studs
	-2	Structural Steel Joists
	-3	"C" Closure
055000	-1	Steel Angle
	-4	Steel Channel
	-5	Steel Lintel
	-6	Steel Pipe
	-7	Steel Tube
	-8	Steel Plate
	-9	Steel Ladder
	-10	Steel Bollard
055100	-1	Steel Stairs
	-2	Steel Stair Stringer
	-3	Steel Embed Plate
055213	-1	Steel Pipe Handrail
	-2	Steel Pipe Rail/Post
	-3	Steel Handrail Wall Bracket
	-4	Steel Rod
055300	-1	Steel Grating
	-2	Steel Frame
057300	-1	Decorative Metal Railings
057500	-1	Ornamental Metal Stamped Grille
061053	-1	2x Wood Nailer (")
	-2	2x Wood Blocking (")
	-3	1x Wood Continuous (")
	-4	Plywood (")
	-5	#30 Felt
	-6	#15 Felt
	-7	Sheathing (")
064116	-1	Interior Architectural Woodwork
	-2	High Pressure Laminate
	-3	Cabinet Liner Laminate
	-4	Particle Board
	-5	Plywood
	-6	3mm Edge Molding
	-7	Solid Wood Blocking
	-8	Hardwood
	-9	Steel Tube/Leg Frame
	-10	Door Hinge
	-11	Door/Drawer Pull
	-12	Magnetic Catch
	-13	Drawer
	-14	Shelf Supports
	-15	Countertop
	-16	Solid-Surfacing Material
071113	-1	Bituminous Dampproofing
071326	-1	Self-Adhering Sheet Waterproofing
072100	-1	Foundation Wall or Under Slab Insulation (R-)
	-2	Cavity Wall Insulation (R-)
	-3	Building Insulation - Unfaced (R-)
	-4	Building Insulation - Faced (R-)
	-5	Sill Sealer
	-6	Safing Insulation
072726	-1	Fluid Applied Membrane Air Barrier
	-2	Flashing Tape
074213	-1	Metal Wall Panel (Type 1)
	-2	Trim
	-3	Z-Furring (")
	-4	Metal Wall Panel (Type 2)
	-5	Metal Soffit Panel
075423	-1	Thermoplastic Polyolefin (TPO) Roofing
	-2	Roof Insulation Flat
	-3	Roof Insulation Tapered
	-4	Roof Expansion Joint
	-5	Coverboard
	-6	Walkway Protection Board
076200	-1	Sheet Metal Flashing and Counterflashing
	-2	Pre-Finished Roof Edge
	-3	Pre-Finished Coping
	-4	Sheet Metal Reglet
	-5	Sheet Metal Gutter
	-6	Sheet Metal Downspout
	-7	Sheet Metal Scupper
077129	-1	Roof Expansion Joint
077200	-1	Roof Hatch/Ladder
078413	-1	Penetration Firestopping
078443	-1	Joint Firestopping
079200	-1	Sealant - Rake where required
	-2	Joint Filler
	-3	Gasket
	-4	Backer Rod
079500	-1	Expansion Control
081113	-1	Steel Door
	-2	Steel Frame
	-3	Frame Anchor
	-4	Louver
	-5	Plaster Guard
	-6	FPR Door
081416	-1	Flush Wood Door
083113	-1	Access Door
	-2	Access Door Frame
	-3	Floor Access Door
083323	-1	Overhead Coiling Door
	-2	Coiling Counter Door
083613	-1	Sectional Overhead Door
	-2	Sectional Overhead Door Track
	-3	Weatherstripping
084113	-1	Aluminum Entrance Door
	-2	Aluminum Entrance Frame
	-3	Sunshade
	-4	Aluminum Subsill
084413	-1	Glazed Aluminum Curtain Wall
	-2	Threshold
	-3	Sunshade Louver
	-4	Aluminum Subsill
087100	-1	Track Hardware
088000	-1	Glazing (as scheduled)
088853	-1	Securtiy Glazing (as scheduled)
089119	-1	Louvers and Vents
092216	-1	Steel Stud (")
	-2	Steel Stud Runner (")
	-3	Furring Channel (")
092400	-1	Portland Cement Plastering
	-2	Metal Lath
	-3	Casing Bead
092900	-1	Gypsum Board (")
	-2	Fire Rated Gypsum Board (")
	-3	Cementitious Tile Backer Panel
	-4	Metal Suspension System
	-5	Acoustical Sealant
	-6	Acoustical Insulation (")
	-7	Metal Edge Trim
	-8	Auxiliary Support Framing
	-9	Metal Control Joint
	-10	High Impact Gypsum Board
	-11	Concrete Interior Finishing Compound
	-12	Stiffener
093000	-1	Porcelain Wall Tile (" x ")
	-2	Shower Pan
	-3	Shower Pan Flashing
	-4	Porcelain Floor Tile (" x ")
	-5	Tile Base
	-6	Tile Cap
	-7	Setting Bed
	-8	Uncoupling water-proof membrane
	-9	Shower Splashguard
	-10	Shower Niche
095113	-1	Acoustical Panel ('x ') (F = Fire Rated)
	-2	Ceiling Suspension System
	-3	Edge Mold Trim
	-4	Auxiliary Support Framing
096513	-1	Resilient Tile Flooring
	-2	Resilient Wall Base
	-3	Edge Strip
	-4	Tactile Warning Surface
	-5	Resilient Stair Tread
	-6	Resilient Stair Riser
	-7	Resilient Stringer Skirt
	-8	Resilient STair Nose
096813	-1	Carpet Tile
096900	-1	Access Flooring
099113	-1	Exterior Painting
099123	-1	Interior Painting
099635	-1	Secondary Containment Coating System
101400	-1	Signage
102113	-1	Toilet Partition
	-2	Urinal Screen
102213	-1	Wire Mesh Partitions
102600	-1	Impact-Resistant Cornerguard
102800	-1	Tissue Dispenser
	-2	Framed Mirror
	-3	Sanitary Napkin Disposer
	-4	Grab Bar
	-5	Shower Seat
	-6	Shower Curtain Rod
	-7	Coat/Robe Hook
	-8	Shower Curtain
104413	-1	Fire Extinguisher Cabinet
104416	-1	Fire Extinguisher
105113	-1	Personnel Locker
	-2	Locker
	-3	Bench
105300	-1	Pre- Manufactured Canopies
107500	-1	Flagpole
108113	-1	Deterrent Spikes
122413	-1	Roller Window Shades
133600	-1	Spray Painting Booth
142400	-1	Hydraulic Elevator
311000	-1	Site Clearing
312000	-1	Earth Moving
	-2	Interior Fill
	-3	Exterior Fill
	-4	Granular Drainage Course
	-5	Subbase Course
321313	-1	Concrete Paving
334600	-1	Perforated Wall Pipe & Fittings
	-2	Geotextile Filter Fabric (Flat/Sock)
	-3	Drainage Panel

HTK ARCHITECTS PA
900 S. KANSAS AVE., SUITE 200
TOPEKA KANSAS 66112
P 785.266.5373
9300 W 110TH ST. STE. 150
OVERLAND PARK, KANSAS 66210
P 913.663.5373
www.htkarchitects.com

R. KEITH BLACKBURN LICENSED 3435 4-15-15 KANSAS PROFESSIONAL ARCHITECT

DENNIS A. HAUGH LICENSED 4-15-15 2567 KANSAS PROFESSIONAL ARCHITECT

DATE:
- 4-15-15

REVISED DATE:
- 12-18-14
- 2-9-15
- 3-10-15
-

HTK PROJECT NUMBER:
- 1410.03

Department of Administration
Office of Facilities and Procurement Management
800 SW Jackson, Suite 700
Topeka, Kansas 66612-1216
Phone 785-296-8899
FAX 785-296-3456

STATE OF KANSAS
STATE OF KANSAS ENERGY & SERVICE CENTER
221 SW 7th Street
BUILDING NUMBER 17300-0038

DATE: 4-15-15 DRAWN BY: Author CHECKED BY: Checker REV:

DETAILS

A-012651

A307

CONSTRUCTION DOCUMENTS

4/16/2015 11:10:52 AM C:\Users\jms\Documents\REVIT\State of Kansas Energy_Central_jms.rvt

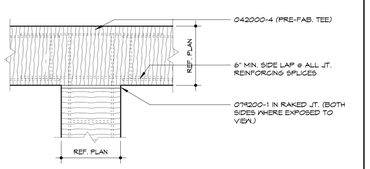

TYP. INTERSECTION CMU PARTITION DTL.

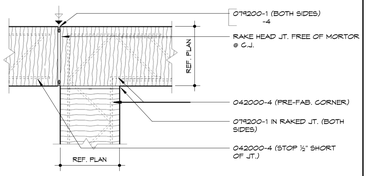

INTERSECTING CMU PARTITION @ C.J.

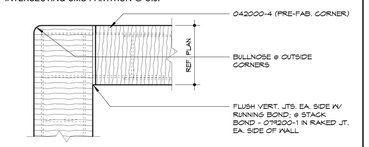

TYPICAL CMU CORNER DETAIL

1 TYP. CMU DETAILS
1 1/2" = 1'-0"

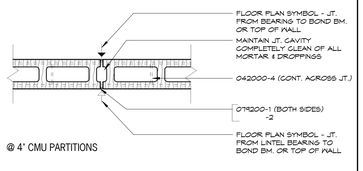

@ 4" CMU PARTITIONS

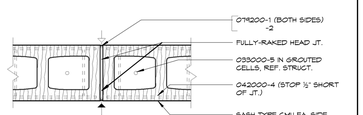

@ 6" & LARGER PARTITIONS

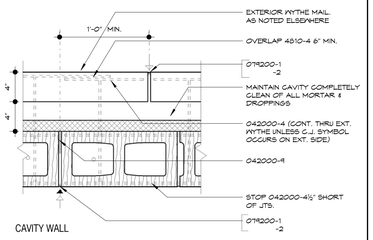

2 MASONRY SHRINKAGE CONTROL JTS.
1 1/2" = 1'-0"

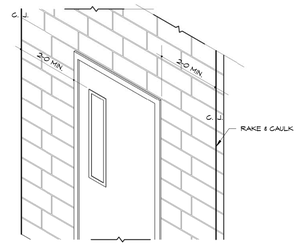

3 TYP. C.J. LOC. @ MASONRY OPNGS.
1/2" = 1'-0"

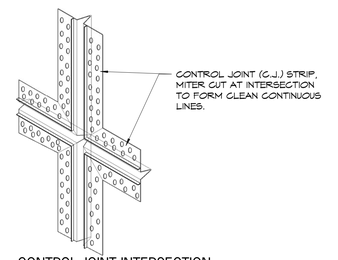

4 CONTROL JOINT INTERSECTION
3" = 1'-0"

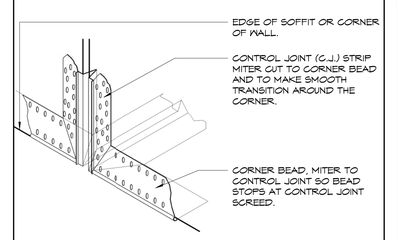

5 CORNER BEAD / CTRL. JT. CONNECT.
3" = 1'-0"

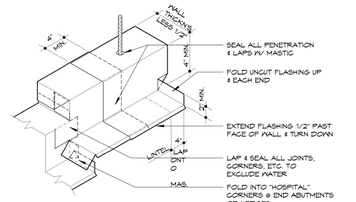

6 STD. FLASHING DETAILS
1 1/2" = 1'-0"

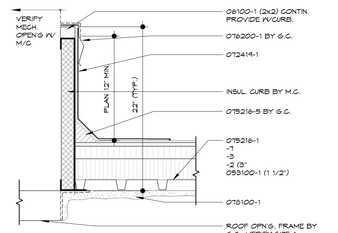

7 TYP. MECH. EQUIP. CURB
1 1/2" = 1'-0"

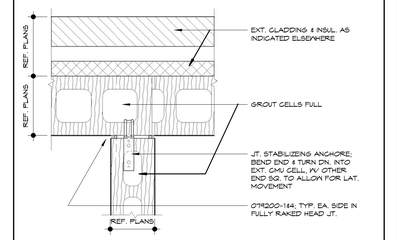

8 INT. PART'N. TO EXT. CMU WALL
1 1/2" = 1'-0"

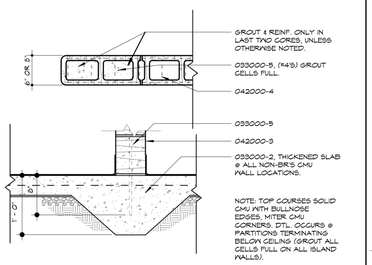

9 MASONRY WALL REINFORCING
1" = 1'-0"

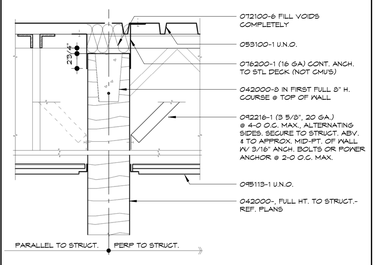

10 TYPICAL MAS. PARTN. (FULL HT.)
1 1/2" = 1'-0"

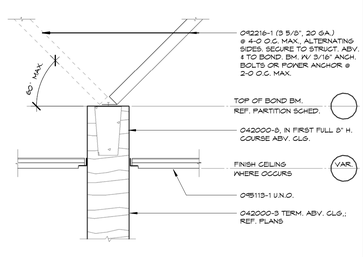

11 TYP. MAS. PARTN. (TO ABV. CLG.)
1 1/2" = 1'-0"

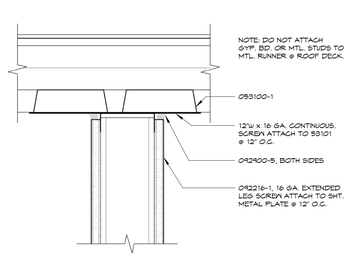

12 GYP. BD. PARTITON TERMINATION
3" = 1'-0"

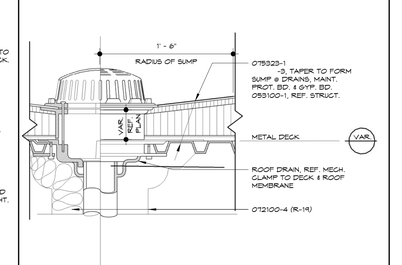

13 ROOF DRAIN
1 1/2" = 1'-0"

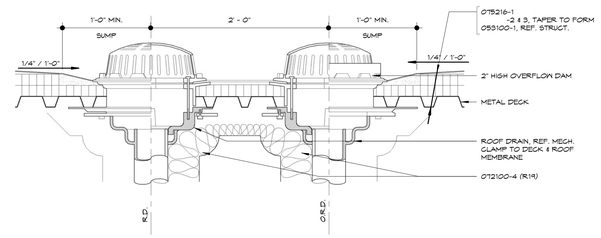

14 ROOF DRAIN & OVERFLOW DRAIN
1 1/2" = 1'-0"

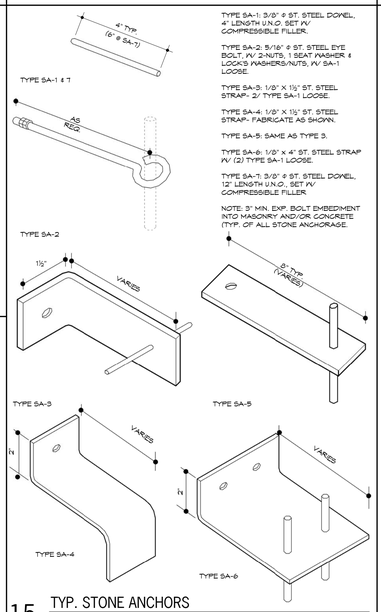

TYPE SA-1: 3/8" ø ST. STEEL DOWEL, 4" LENGTH U.N.O. SET W/ COMPRESSIBLE FILLER.

TYPE SA-2: 5/16" ø ST. STEEL EYE BOLT, W/ 2-NUTS, 1 SEAT WASHER & LOCK'S WASHERS/NUTS, W/ SA-1 LOOSE.

TYPE SA-3: 1/8" X 1½" ST. STEEL STRAP- 2/ TYPE SA-1 LOOSE.

TYPE SA-4: 1/8" X 1½" ST. STEEL STRAP- FABRICATE AS SHOWN.

TYPE SA-5: SAME AS TYPE 3.

TYPE SA-6: 1/8" X 4" ST. STEEL STRAP W/ (2) TYPE SA-1 LOOSE.

TYPE SA-7: 3/8" ø ST. STEEL DOWEL, 12" LENGTH U.N.O., SET W/ COMPRESSIBLE FILLER

NOTE: 3" MIN. EXP. BOLT EMBEDMENT INTO MASONRY AND/OR CONCRETE (TYP. OF ALL STONE ANCHORAGE

15 TYP. STONE ANCHORS
12" = 1'-0"

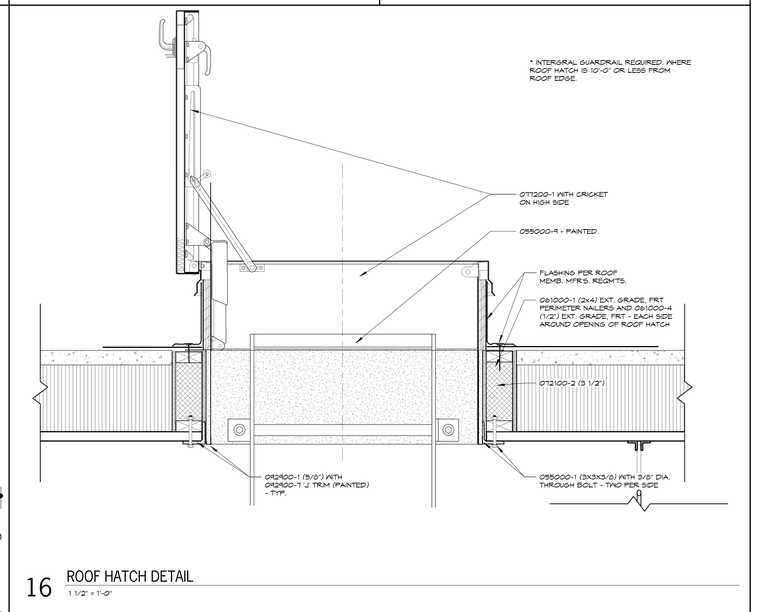

16 ROOF HATCH DETAIL
1 1/2" = 1'-0"

NOTE: REFER TO STRUCTURAL DRAWINGS FOR REINFORCING STEEL IN EXTERIOR WALLS AND CONCRETE NOT SHOWN

NOTE: REFER TO ALL DETAILS (DETAILS LOCATED ON THIS SHEET, PRECEEDING SHEETS AND FOLLOWING SHEETS) FOR APPLICABLE NOTES NOT SHOWN

NOTE: REFER TO ALL SECTIONS (SECTIONS LOCATED ON THIS SHEET, PRECEEDING SHEETS AND FOLLOWING SHEETS) FOR APPLICABLE NOTES NOT SHOWN

KEYNOTES

Note: Keynotes are drawn from a master list & may not be sequentially numbered. Sizes (Ex: 2x4) or other info. following keynote on drawings indicates criteria for those materials/locations which may differ from std. material specified.

033000	-1	Concrete Structure	081113	-1	Steel Door
	-2	Concrete Floor Slab		-2	Steel Frame
	-3	Vapor Barrier		-3	Frame Anchor
	-4	Welded Wire Fabric		-4	Louver
	-5	Steel Reinforcing Bar		-5	Master Guard
	-6	Radial Jt. Joint		-6	FRP Door
	-7	Waterstop	081416	-1	Flush Wood Door
	-9	Dovetail Anchor	083113	-1	Access Door
	-A	Sidewalk		-2	Access Door Frame
	-10	Premolded Joint Filler		-3	Floor Access Door
035300	-1	Concrete Topping	083323	-1	Overhead Coiling Door
042000	-1	Face Brick		-2	Coiling Counter Door
	-2	Concrete Masonry Unit - Nominal Height (")	083613	-1	Sectional Overhead Door
				-2	Sectional Overhead Door Track
	-3	Concrete Masonry Unit - Lightweight (")		-3	Weatherstripping
	-4	Wire Reinforcing	084113	-1	Aluminum Entrance Door
	-5	Metal Tie/Anchor		-2	Aluminum Entrance Frame
	-6	Through Wall Flashing		-3	Sunshade
	-7	Control Joint Strip		-4	Aluminum Sunsill
	-8	Bond Beam (")	084413	-1	Glazed Aluminum Curtain Wall
	-A	Compressible Filler		-2	Threshold
	-10	Weep Hole		-3	Transition Louver
	-11	Termination Bar		-4	Aluminum Sunsill
044300	-1	Stone Masonry	087100	-1	Track Hardware
	-2	Anchor	088000	-1	Glazing (as scheduled)
	-3	Stone Jamb	088853	-1	Security Glazing (as scheduled)
	-4	Stone Sill			
	-5	Belt Course	089116	-1	Louvers and Vents
047200	-1	Cast Stone	092216	-1	Steel Stud (")
051200	-1	Steel Beams		-2	Steel Stud Runner (")
	-2	Steel Column		-3	Furring Channel (")
	-3	Steel Tube	092400	-1	Portland Cement Plastering
	-4	Steel Channel		-2	Metal Lath
052100	-1	Steel Joist		-3	Casing Bead
	-2	Joist - Extended End	092900	-1	Gypsum Board (")
	-3	Joist - Ceiling Extension		-2	Fire Rated Gypsum Board (")
053100	-1	Metal Decking		-3	Cementitious Tile Backer Panel
	-2	Steel Composite Decking			
	-3	Flexible Closure Strips		-4	Metal Suspension System
054000	-1	Structural Steel Studs		-5	Acoustical Sealant
	-2	Structural Steel Joists		-6	Acoustical Insulation (")
	-3	"C" Closure	093000	-1	Steel Angle
055000	-1	Steel Angle		-2	Metal Edge Trim
	-4	Steel Channel		-3	Auxiliary Support Framing
	-5	Steel Lintel		-4	Metal Control Joint
	-6	Steel Plate		-10	High Impact Gypsum Board
	-7	Steel Tube		-11	Non-Combustible Interior Framing Components
	-8	Steel Plate			
	-A	Steel Ladder		-12	Stiffener
	-10	Steel Bollard	093000	-1	Porcelain Wall Tile (" x ")
055100	-1	Steel Stairs		-2	Shower Pan
	-2	Steel Stair Stringer		-3	Shower Pan Flashing
	-3	Steel Embed Plate		-4	Porcelain Floor Tile (" x ")
055213	-1	Steel Pipe Handrail			
	-2	Steel Pipe Rail/Post		-5	Tile Base
	-3	Steel Handrail Wall Bracket		-6	Tile Cap
	-4	Steel Rod		-7	Setting Bed
055300	-1	Steel Grating		-8	Uncoupling water-proof membrane
	-2	Steel Frame			
057300	-1	Decorative Metal Railings		-9	Shower Splashguard
057500	-1	Ornamental Metal Stamped Grille		-10	Shower Niche
061063	-1	2x Wood Nailer (")	095113	-1	Acoustical Panel (" x ") (F = Fire Rated)
	-2	2x Wood Blocking (")			
	-3	1x Wood Continuous (")		-2	Ceiling Suspension System
	-4	Plywood (")		-3	Edge Mold Trim
	-5	100 Felt		-4	Auxiliary Support Framing
	-6	419 Felt	096513	-1	Resilient Tile Flooring
	-7	Sheathing (")		-2	Resilient Wall Base
064116	-1	Plastic Laminate Architectural Millwork		-3	Tile Edge
	-2	High Pressure Laminate		-4	Rigid Flooring Surface
	-3	Cabinet Liner Laminate		-5	Resilient Stair Tread
	-4	Particle Board		-6	Resilient Stair Riser
	-5	Plywood		-7	Resilient Stringer Skirt
	-6	3mm Edge Molding		-8	Resilient Stair Nose
	-7	Solid Wood Blocking	096813	-1	Carpet Tile
	-8	Hardwood	099100	-1	Access Flooring
	-A	Steel Tube/Leg Frame	099113	-1	Exterior Painting
	-10	Door Hinge	099123	-1	Interior Painting
	-11	Door/Drawer Pull	099600	-1	Secondary Containment Coating System
	-12	Magnetic Catch	101400	-1	Signage
	-13	Drawer	102113	-1	Toilet Partition
	-14	Shelf Supports		-2	Urinal Screen
	-15	Countertop	102213	-1	Wire Mesh Partitions
	-16	Solid-Surfacing Material	102600	-1	Impact-Resistant Corner-guard
071113	-1	Bituminous Dampproofing	102800	-1	Tissue Dispenser
071326	-1	Self-Adhering Sheet Waterproofing		-2	Framed Mirror
				-3	Sanitary Napkin Disposer
072100	-1	Foundation Wall or under Slab Insulation (R-)		-4	Grab Bar
				-5	Shower Seat
	-2	Cavity Wall Insulation (R-)		-6	Shower Curtain Rod
	-3	Building Insulation - Unfaced		-7	Coat/Robe Hook
	-4	Building Insulation - Faced (R-)	104413	-1	Flagpole
			104419	-1	Fire Extinguisher Cabinet
	-5	Sill Sealer		-1	Fire Extinguisher
	-6	Batting Insulation	105113	-1	Personnel Locker
072126	-1	Fluid Applied Membrane Air Barrier		-2	Locker
	-2	Flashing Tape		-3	Bench
074213	-1	Metal Wall Panel (Type 1)	105500	-1	Pre-Manufactured Canopies
	-2	Trim	105813	-1	Flagpole
	-3	Z-Furring (")	122413	-1	Exterior Sunshade
	-4	Metal Wall Panel (Type 2)	139600	-1	Spray Painting Booth
	-5	Metal Soffit Panel	142400	-1	Hydraulic Elevator
075423	-1	Thermoplastic Polyolefin (TPO) Roofing	311000	-1	Site Clearing
	-2	Roof Insulation Flat	312000	-1	Earth Moving
	-3	Roof Insulation Tapered		-2	Interior Fill
	-4	Roof Expansion Joint		-3	Exterior Fill
	-5	Coverboard		-4	Granular Drainage Course
	-6	Walkway Protection Board	321313	-5	Subbase Course
076200	-1	Sheet Metal Flashing and Counterflashing	334600	-1	Concrete Paving
				-1	Perforated Wall Pipe & Fittings
	-2	Pre-finished Roof Edge		-2	Geotextile Filter Fabric (Flat/Sock)
	-3	Pre-finished Coping		-3	Drainage Panel
	-4	Sheet Metal Reglet			
	-5	Sheet Metal Gutter			
	-6	Sheet Metal Downspout			
	-7	Sheet Metal Scupper			
077124	-1	Roof Expansion Joint			
077200	-1	Roof Hatch/Ladder			
078413	-1	Penetration Firestopping			
078445	-1	Joint Firestopping			
079200	-1	Sealant - Rake where required			
	-2	Joint Filler			
	-3	Gasket			
	-4	Backer Rod			
079500	-1	Expansion Control			

HTK ARCHITECTS PA
9300 W 110TH ST. STE. 150
OVERLAND PARK, KANSAS 66210
P 913.663.3373
900 S. KANSAS AVE., SUITE 200
TOPEKA KANSAS 66612
P 785.266.3373
www.htkarchitects.com

DANIEL A. HAGEN — LICENSED — 4-15-15 — 25621 — KANSAS — PROFESSIONAL ARCHITECT

DATE:
- 4-15-15

REVISED DATE:
- 12-18-14
- 2-9-15
- 3-10-15

HTK PROJECT NUMBER:
- 1410.03

Department of Administration
Office of Facilities and Procurement Management
800 SW Jackson, Suite 700
Topeka, Kansas 66612-1216
Phone: 785-296-8893
FAX 785-296-3456

STATE OF KANSAS
STATE OF KANSAS ENERGY & SERVICE CENTER
221 SW 7th Street
BUILDING NUMBER 17300-0038

DRAWN BY: Author CHECKED BY: Checker REV:
DATE: 4-15-15

DETAILS

A-012651

A308

CONSTRUCTION DOCUMENTS

4/16/2015 11:10:58 AM C:\Users\jms\Documents\REVIT\State of Kansas Energy_Central_jms.rvt

JCSBC
2-2-2016
AtL9G--0042

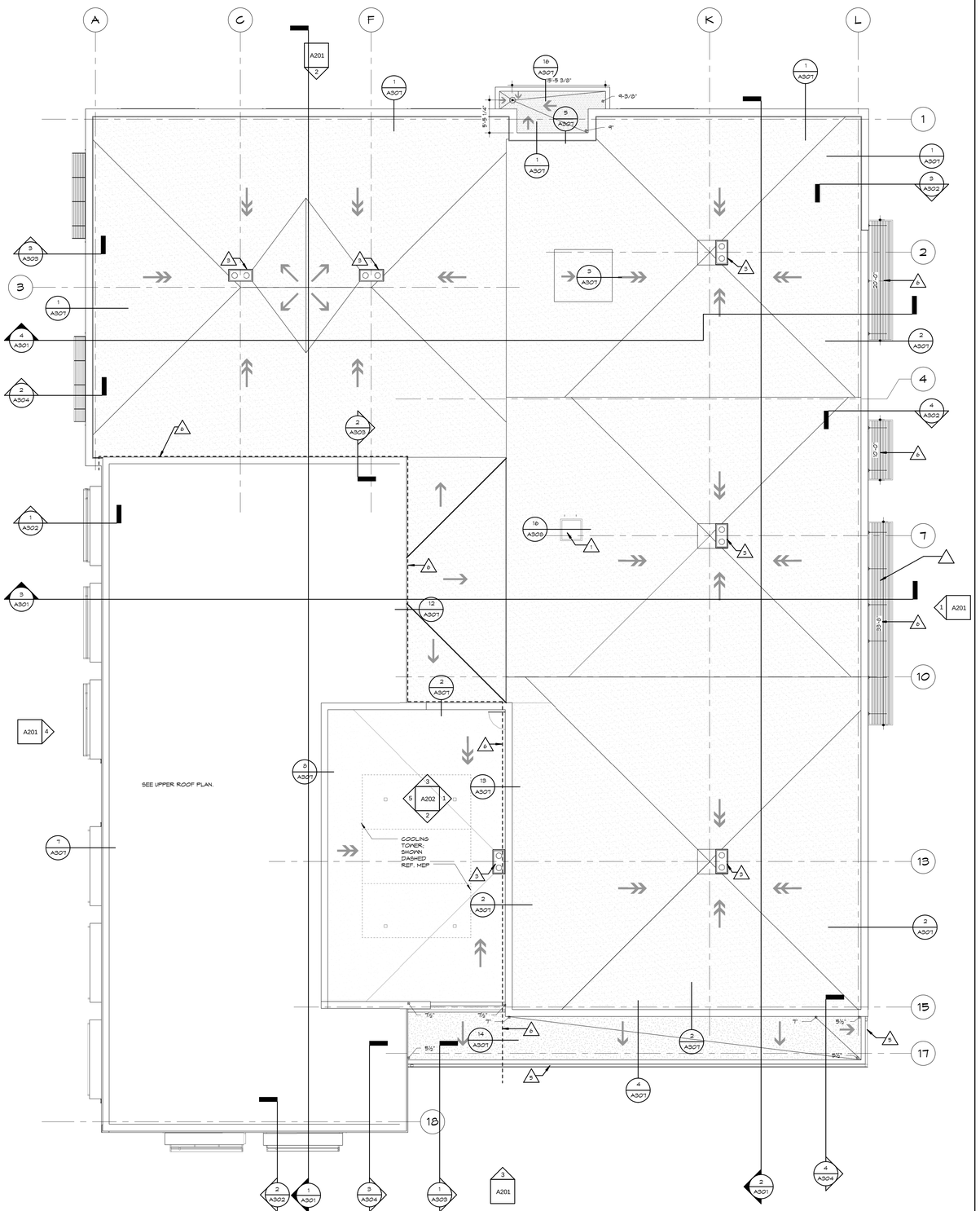

1 ROOF PLAN- LOWER
1/8" = 1'-0"
NORTH

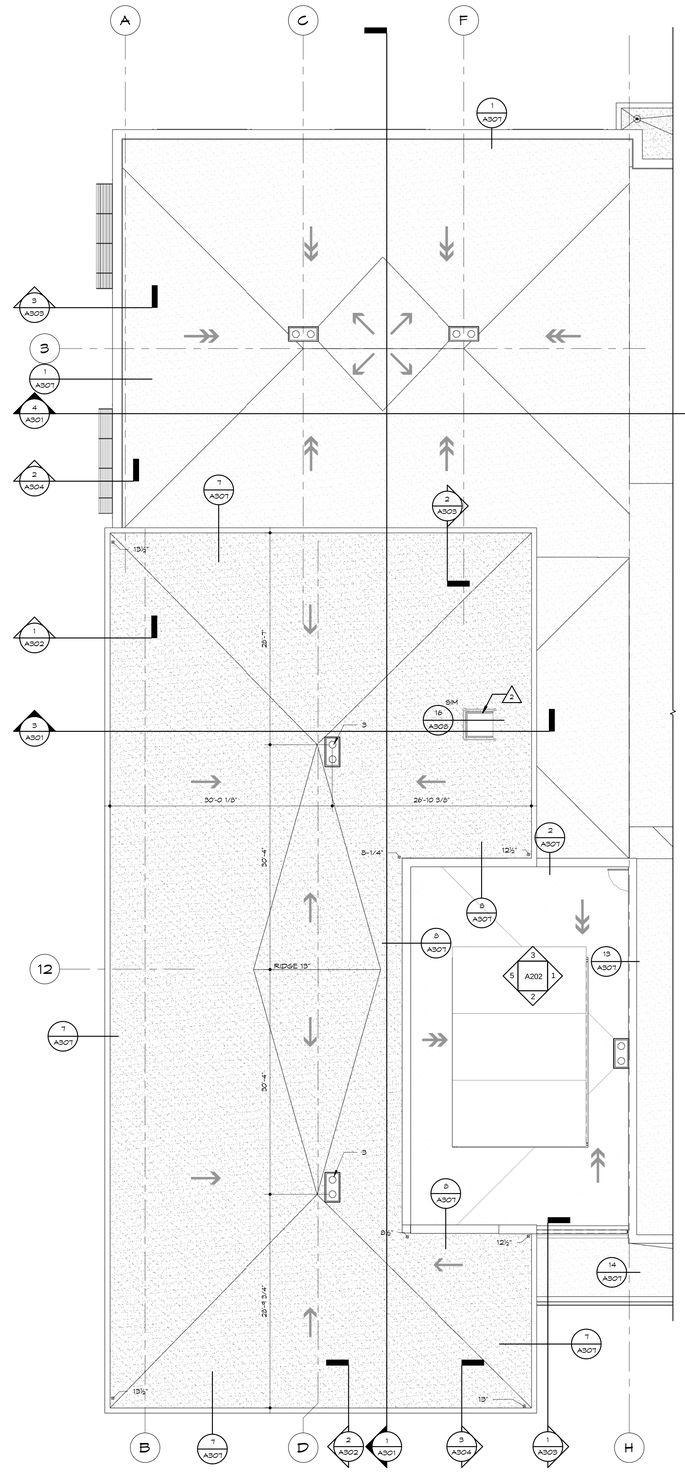

2 ROOF PLAN- UPPER
1/8" = 1'-0"
NORTH

ROOF PLAN LEGEND

- INDICATES SLOPED STRUCTURE
- INDICATES TAPERED INSULATION 1/4"/FT. U.N.O.
- inches — TOTAL THICKNESS OF INSULATION & ROOF SYSTEM ABOVE DECK, U.N.O.
- TPO MEMBRANE OVER 1/2" DENSGLASS COVERBOARD AND 5" BASE POLYISO INSULATION.
- TPO MEMBRANE OVER 1/2" DENSGLASS COVERBOARD AND 3" BASE POLYISO INSULATION.
- TPO MEMBRANE OVER 1/2" DENSGLASS COVERBOARD AND 2" BASE POLYISO INSULATION.

ROOF PLAN NOTES

GENERAL: COORDINATE WITH WORK SHOWN ON STRUCTURAL, MECHANICAL, PLUMBING, AND ELECTRICAL DRAWINGS, REF. FE SHEET FOR EQUIP. COORDINATION

1. ROOF HATCH.
2. ROOF HATCH WITH INTEGRAL GUARD RAIL.
3. ROOF DRAIN W/ OVERFLOW.
4. ROOF DRAIN.
5. PREFINISHED METAL GUTTER WITH PREFINISHED LEADER TO DOWNSPOUT BOOT.
6. 2" BUILDING EXPANSION JOINT.

HTK ARCHITECTS PA
900 S. KANSAS AVE., SUITE 200
TOPEKA KANSAS 66112
P 785.266.5373
9300 W 110TH ST., STE. 150
OVERLAND PARK, KANSAS 66210
P 913.663.5373
www.htkarchitects.com

R. KEITH BLACKBURN LICENSED 13435 KANSAS PROFESSIONAL ARCHITECT 4-15-15

DENNIS A. HAUGH LICENSED 2567 KANSAS PROFESSIONAL ARCHITECT 4-15-15

DATE:
- 4-15-15

REVISED DATE:
- 12-18-14
- 2-9-15
- 3-10-15

HTK PROJECT NUMBER:
- 1410.03

Department of Administration
Office of Facilities and
Procurement Management
800 SW Jackson, Suite 700
Topeka, Kansas 66612-1216
Phone 785-296-8899
FAX 785-296-3456

STATE OF KANSAS
STATE OF KANSAS ENERGY & SERVICE CENTER
221 SW 7th Street
BUILDING NUMBER 17300-0038

DATE: 4-15-15 DRAWN BY: Author CHECKED BY: Checker REV:

ROOF PLAN

A-012651

A401

CONSTRUCTION DOCUMENTS

4/16/2015 11:11:13 AM C:\Users\jms\Documents\REVIT\State of Kansas Energy_Central_jms.rvt

JCSBC
2-2-2016
Att.9G.--0043

DOOR AND FRAME SCHEDULE

PLAN MARK	DOOR OPENING SIZE W	DOOR OPENING SIZE H	DOOR TYPE (A)	DOOR MATERIAL (B)	FRAME MATERIAL (B)	FRAME TYPE (C)	FRAME DETAILS HEAD (D)	FRAME DETAILS JAMB (D)	FRAME DETAILS OTHER (D)	RATING	NOTES
100.1	6'-0"	7'-2"	FG	A	A	A7	3	18	5		
100.2	6'-0"	7'-2"	FG	A	A	A8	2	2			
101.1	3'-0"	7'-2"	F	A	HM	S1	2	2		(60)	
101.2	3'-0"	7'-2"	F	A	HM	S1	2	2		(60)	
102.1	3'-0"	7'-2"	F	A	HM	S1	2	2			
102.2	6'-0"	6'-6"	OGCD	S		SM 10	21	13		(60)	
103	2'-8"	7'-2"	F	A	HM	S1	2	2			
104	3'-0"	7'-2"	F	A	HM	S1	2	2			
105	3'-0"	7'-2"	F	A	HM	S1	2	2			
106	3'-0"	7'-2"	F	A	HM	S1	2	2			
107	3'-0"	7'-2"	F	A	HM	S1	2	2			
108	3'-0"	7'-2"	F	A	HM	S1	2	2			
109	3'-0"	7'-2"	F	A	HM	S1	2	2			
110.1	3'-0"	7'-2"	F	A	HM	S1	2	2			
110.2	3'-0"	7'-2"	F	A	HM	S1	2	2			
111	3'-0"	7'-2"	F	A	HM	S1	2	2			
112	3'-0"	7'-2"	F	S	HM	S1	1	1			
115	3'-0"	7'-2"	F	A	HM	S1	2	1 & 2			
116	3'-0"	7'-2"	F	A	HM	S1	2	1 & 2			
117	3'-0"	7'-2"	F	A	HM	S1	1	1			
118	3'-0"	7'-2"	F	A	HM	S1	2	1 & 2			
120	3'-0"	7'-2"	F	A	HM	S1	2	2			
121	3'-0"	7'-2"	F	A	HM	S1	2	2			
123.1	3'-0"	7'-2"	F	S	HM	S1	1	1			
123.2	6'-0"	7'-2"	F	S	HM	S2	2	2			
123.3	3'-0"	7'-2"	F	S	HM	S1	2	2			
124	3'-0"	7'-2"	F	S	HM	S1	2	2			
125.1	3'-0"	7'-2"	FG	S	HM	S1	2	2			
125.2	3'-0"	7'-2"	FG	S	HM	S1	2	2			
125.3	3'-0"	7'-2"	F	S	HM	S1	2	2			
126.1	6'-0"	7'-2"	F	S	HM	S2	2	2			
126.2	3'-0"	7'-2"	F	S	HM	S1	2	2			
127.1	3'-0"	7'-2"	F	FRP	A	S1 SM	3	18	5		
127.2	12'-0"	10'-0"	SCHD	A			20	22			
128	6'-0"	7'-2"	F	S	HM	S2	2	2			
129.1	6'-0"	7'-2"	FG	A	A	A11	3	18	5		
129.2	6'-0"	7'-2"	FG	A	A	S2 SIM	2 SIM	2 SIM			
130.1	3'-0"	7'-2"	F	A	HM	S1	2	2		(60)	
130.2	3'-0"	7'-2"	F	A	HM	S1	2	2		(60)	
131.1	3'-0"	7'-2"	F	FPR	A	A1	3	18	5		
131.2	10'-0"	12'-0"	OHCD	S		OHCD	10	11	12		
132.1	3'-0"	7'-2"	F	S	HM	S1	2	2			
132.2	3'-0"	7'-2"	F	S	HM	S1	2	2			
133.1	3'-0"	7'-2"	F	S	HM	S1	2	2			
133.2	3'-0"	7'-2"	F	S	HM	S1	2	2			
134	3'-0"	7'-2"	F	S	HM	S1	2	2			
135.1	3'-0"	7'-2"	F	S	HM	S1	2	2			
135.2	3'-0"	7'-2"	F	FPR	A	A9	3	18	5		
136.1	3'-0"	7'-2"	F	FPR	A	A9	3	18	5		
136.2	10'-0"	10'-0"	OHCD	S		OHCD	10	11	12		
138	3'-0"	7'-2"	F	S	HM	S1	2	2			
139	6'-0"	7'-2"	F	FRP	A	A10	3	18	5		
140	3'-0"	7'-2"	F	S	HM	S1	2	2			
141.1	3'-0"	7'-2"	F	FPR	A	A9	3	18	5		
141.2	10'-0"	10'-0"	OHCD	S		OHCD	10	11	12		
141.3	3'-0"	7'-2"	F	S	HM	S1	2	2			
142.1	3'-0"	7'-2"	F	A	HM	S1	2	2		(60)	
142.2	3'-0"	7'-2"	F	A	HM	S1	2	2		(60)	
143	3'-0"	7'-2"	F	S	HM	S1	2	2			
144	3'-0"	7'-2"	FG	A	HM	S1	1	1			
145	3'-0"	7'-2"	F	A	HM	S1	2	2			
146	6'-0"	7'-2"	F	S	S	S2	1	2	N/A		
200	3'-0"	7'-2"	F	A	HM	S1	1	1			
201	3'-0"	7'-2"	F	A	HM	S1	1	1			
202	3'-0"	7'-2"	F	A	HM	S1	1	1			
203	3'-0"	7'-2"	F	S	HM	S1	1	1			
204	3'-0"	7'-2"	F	S	HM	S1	2	2			
205	3'-0"	7'-2"	F	FRP	A	S1	1	1	17		
206	3'-0"	7'-2"	F	A	HM	S1	2	2			
207	3'-0"	7'-2"	F	A	HM	S1	2	2			
208	3'-0"	7'-2"	F	A	HM	S1	2	2			
209	3'-0"	7'-2"	F	A	HM	S1	2	2			
210	3'-0"	7'-2"	F	A	HM	S1	2	2			
212	6'-0"	7'-2"	F	A	HM	S2	2	2			
214	3'-0"	7'-2"	F	A	HM	S1	2	2			
215	3'-0"	7'-2"	F	A	HM	S1	2	2			
217	3'-0"	7'-2"	F	A	HM	S1	2	2			
218	3'-0"	7'-2"	F	A	HM	S1	2	2			
219	3'-0"	7'-2"	F	S	HM	S1	2	2			
221	4'-0"	7'-2"	F	S	HM	S1	2	2			
222	4'-0"	7'-2"	F	S	HM	S1	2	2			
223	3'-0"	7'-2"	F	S	HM	S1	2	2			
224	3'-0"	7'-2"	F	S	HM	S1	2	2			
225	3'-0"	7'-2"								2	
5100	2'-0"	6'-8"	F	S	HM	S1	1	1			
5102	3'-0"	7'-2"	F	S	HM	S1	2	2			
5103	3'-0"	7'-2"	F	S	HM	S1	2	2			1
5104	6'-0"	7'-2"	F	S	HM	S2	2	2			

DOOR & FRAME SCHEDULE NOTES

- Field verify conditions at all exist. openings & modify as req'd to fit.
- All alum. frames are 4 1/2" deep and 2" wide- u.n.o.
- All steel welded frames are 3/4" wider than the nominal wall width - u.n.o
- All doors are 1 3/4" thick unless noted otherwise.
- Letters in parentheses ( ) A, B, C, D, E, & F at top of various columns in the schedule are for column identification & are clarified as follows:
  - (A) To identify DOOR TYPES refer to DOOR TYPES this sheet.
  - (B) For DOOR MATERIAL AND FRAME MATERIAL:
    - S = Steel
    - A = Aluminum
    - FI = Wood
  - (C) To identify FRAME TYPES refer to STEEL FRAME ELEVATIONS & ALUM. FRAME ELEVS.
  - (D) FRAME DETAILS are referenced and shown as follows, unless noted otherwise:
    Frame Details are referenced in Door and Frame Schedule, and shown on this sheet. Steel Frame Profiles are referenced on Steel Frame Elevations, and shown on this sheet.
    Glass types are shown on Frame Elevations.
  - (E) SCHEDULE NOTES:
    1. EXISTING DOOR, FRAME, HARDWARE, AND TRIM TO BE RELOCATED.
    2. WIRE PARTITION DOOR. SEE SPECIFICATIONS FOR HARDWARE.

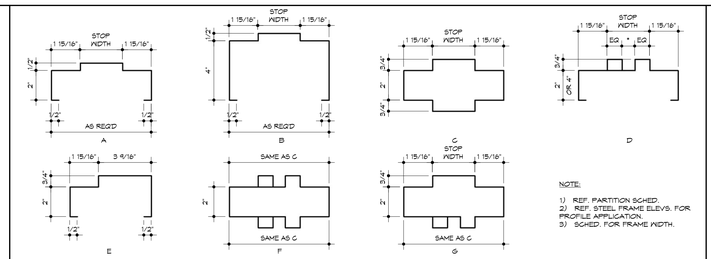

STEEL FRAME PROFILES

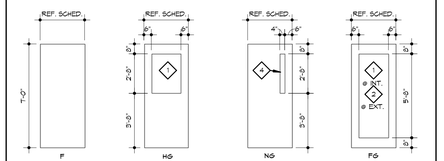

DOOR TYPES

GLASS SCHEDULE

MARK	TYPE
1	1" INSULATING: A) Exterior - 1/4" Tinted B) Interior - 1/4" Clear Low-E
2	1" INSULATING TEMPERED: A) Exterior - 1/4" Tinted B) Interior - 1/4" Clear Low-E
3	1/4" CLEAR
4	1/4" CLEAR TEMPERED
5	BALLISTIC GLAZING
6	1" INSULATING TEMPERED SPANDREL
7	LOUVER INSERT REF. MECH.
8	LOUVER INSERT REF. MECH. AND DECORATIVE METAL SCREEN IN FRONT (05T500-1) PATTERN SHOWN OUT OF SCALE. GLAZING TYPE 2 AT SOUTH.
9	METAL INSERT.
10	3/16" CLEAR TEMPERED

* REF. PLANS FOR TRANSACTION FRAME GLAZING.

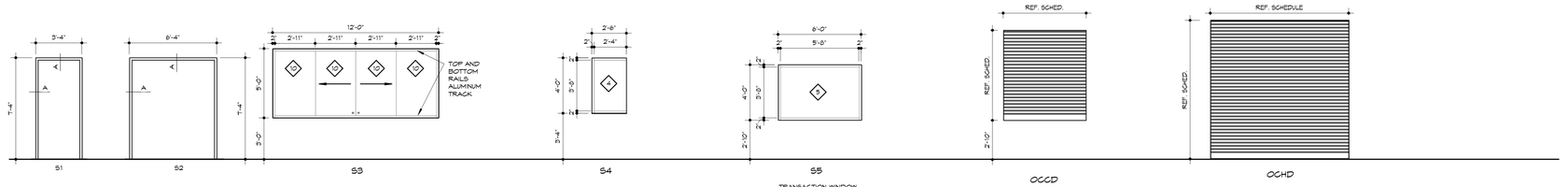

STEEL FRAMES

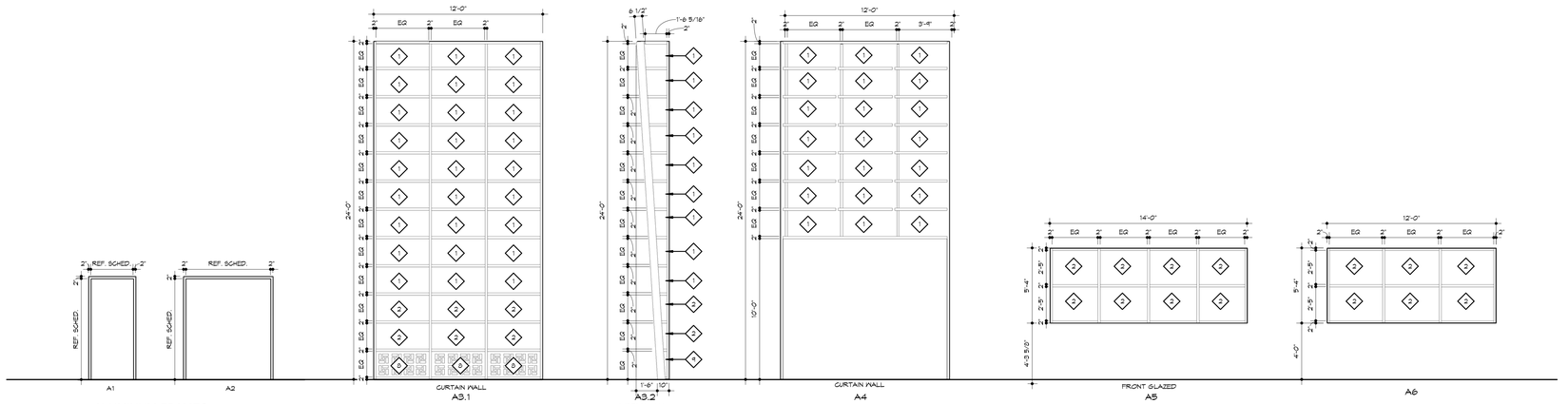

ALUMINUM FRAMES

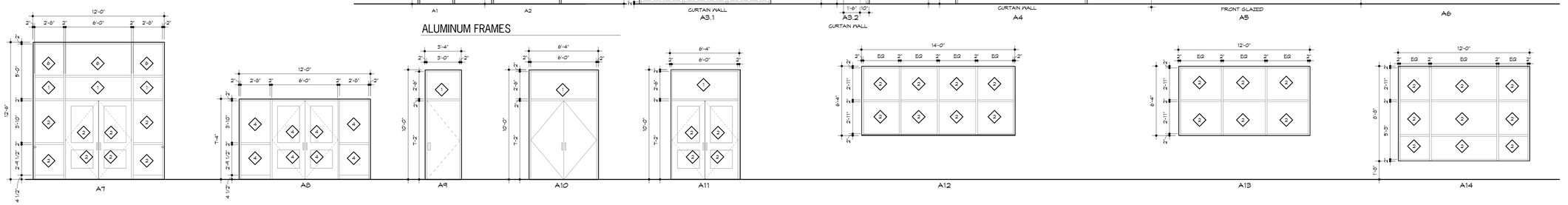

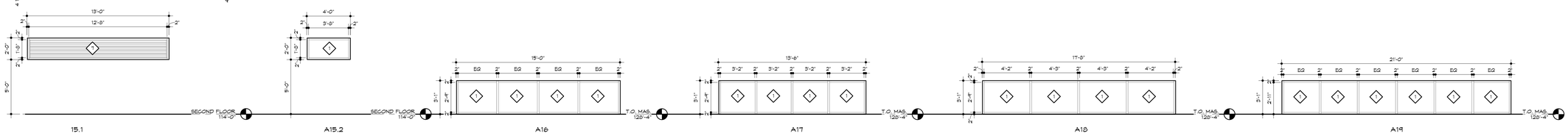

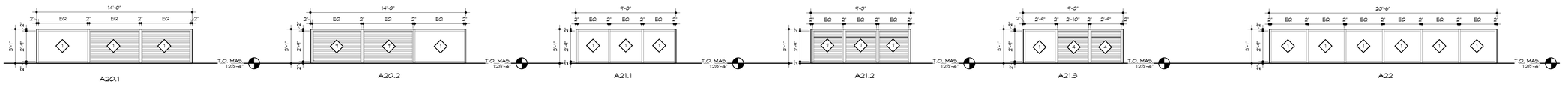

HTK ARCHITECTS PA
9300 W 110TH ST. STE. 150
OVERLAND PARK, KANSAS 66210
P 913.663.3373
900 S. KANSAS AVE., SUITE 200
TOPEKA KANSAS 66612
P 785.266.3373
www.htkarchitects.com

DATE:
- 4-15-15

REVISED DATE:
- 12-18-14
- 2-9-15
- 3-10-15
-

HTK PROJECT NUMBER:
- 1410.03

Department of Administration
Office of Facilities and
Procurement Management
800 SW Jackson, Suite 700
Topeka, Kansas 66612-1216
Phone 785-296-0669
FAX 785-296-3456

STATE OF KANSAS
STATE OF KANSAS ENERGY & SERVICE CENTER
221 SW 7th Street
BUILDING NUMBER 17300-0038
DRAWN BY: Author CHECKED BY: Checker REV:
DATE: 4-15-15

DOOR, FRAME, & WINDOW SCHEDULES & DETAILS

A-012651

A501

CONSTRUCTION DOCUMENTS

4/16/2015 11:11:34 AM C:\Users\jms\Documents\REVIT\State of Kansas Energy_Central_jms.rvt

JCSBC
2-2-2016
Att.9G.--0044

4/16/2015 11:11:45 AM C:\Users\jms\Documents\REVIT\State of Kansas Energy_Central_jms.rvt

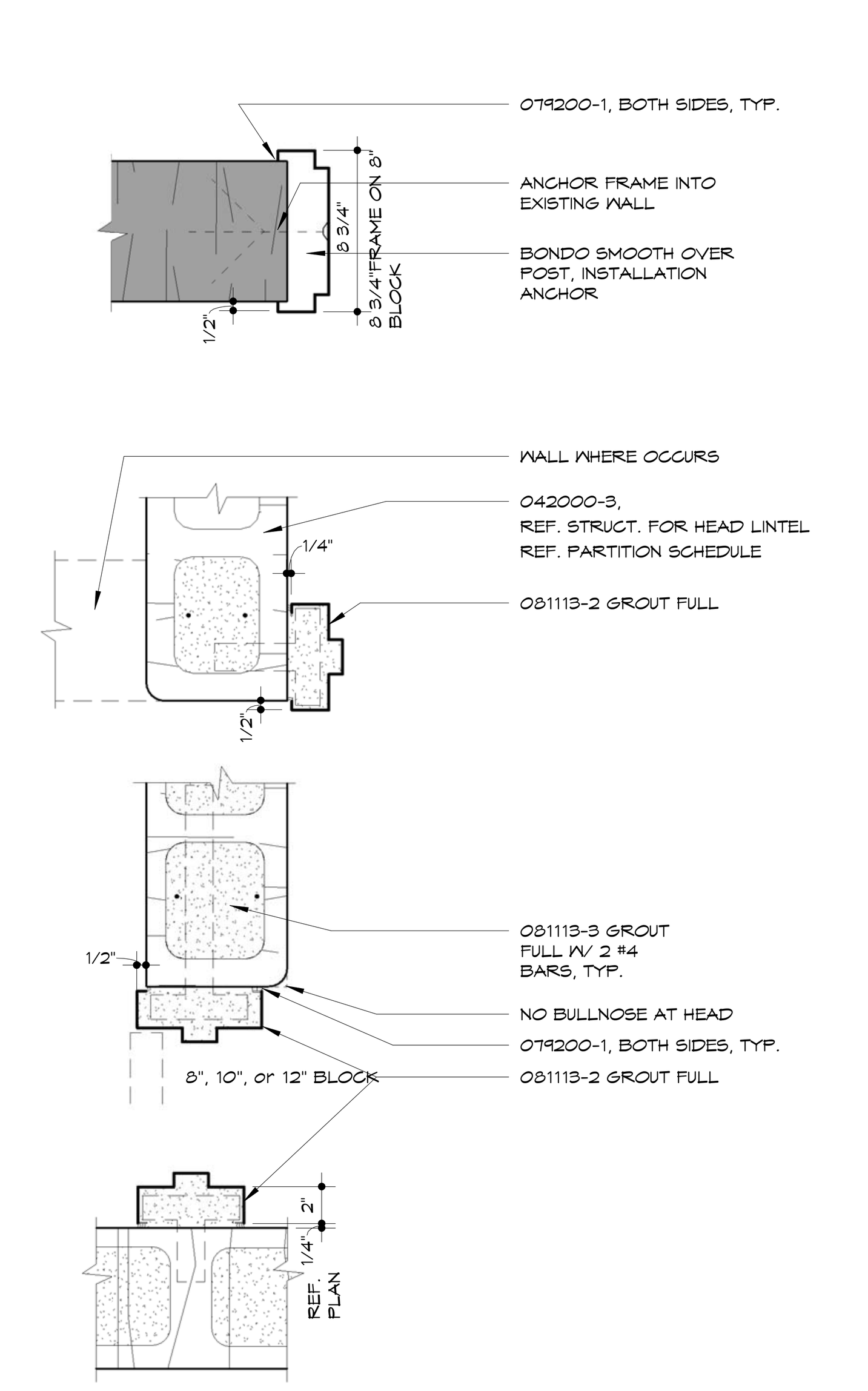

1 INT. MASONRY JAMB, HEAD SIM DETAIL
1 1/2" = 1'-0"

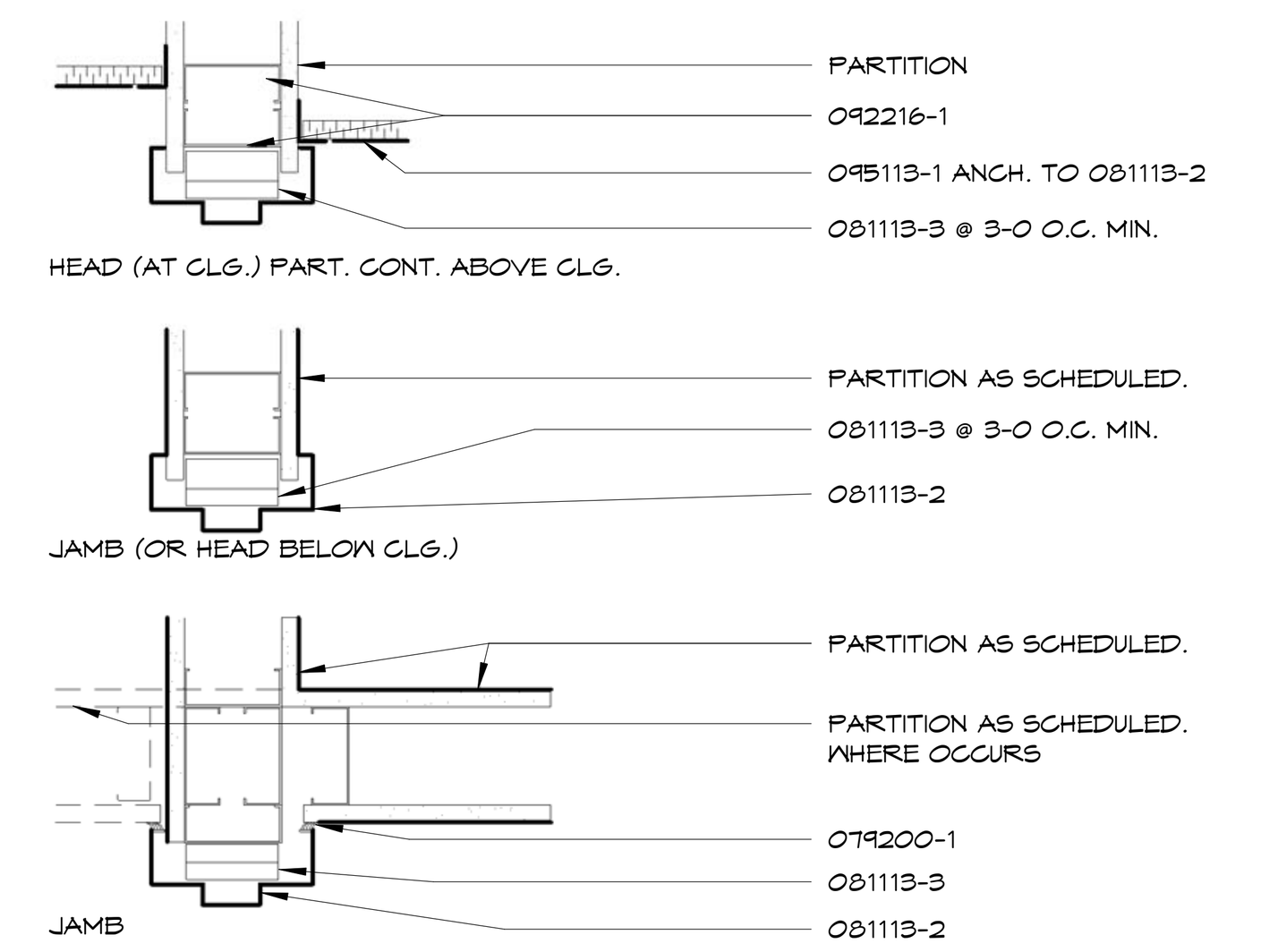

2 GYP. BD. PARTITION HEAD & JAMB DETAIL
1 1/2" = 1'-0"

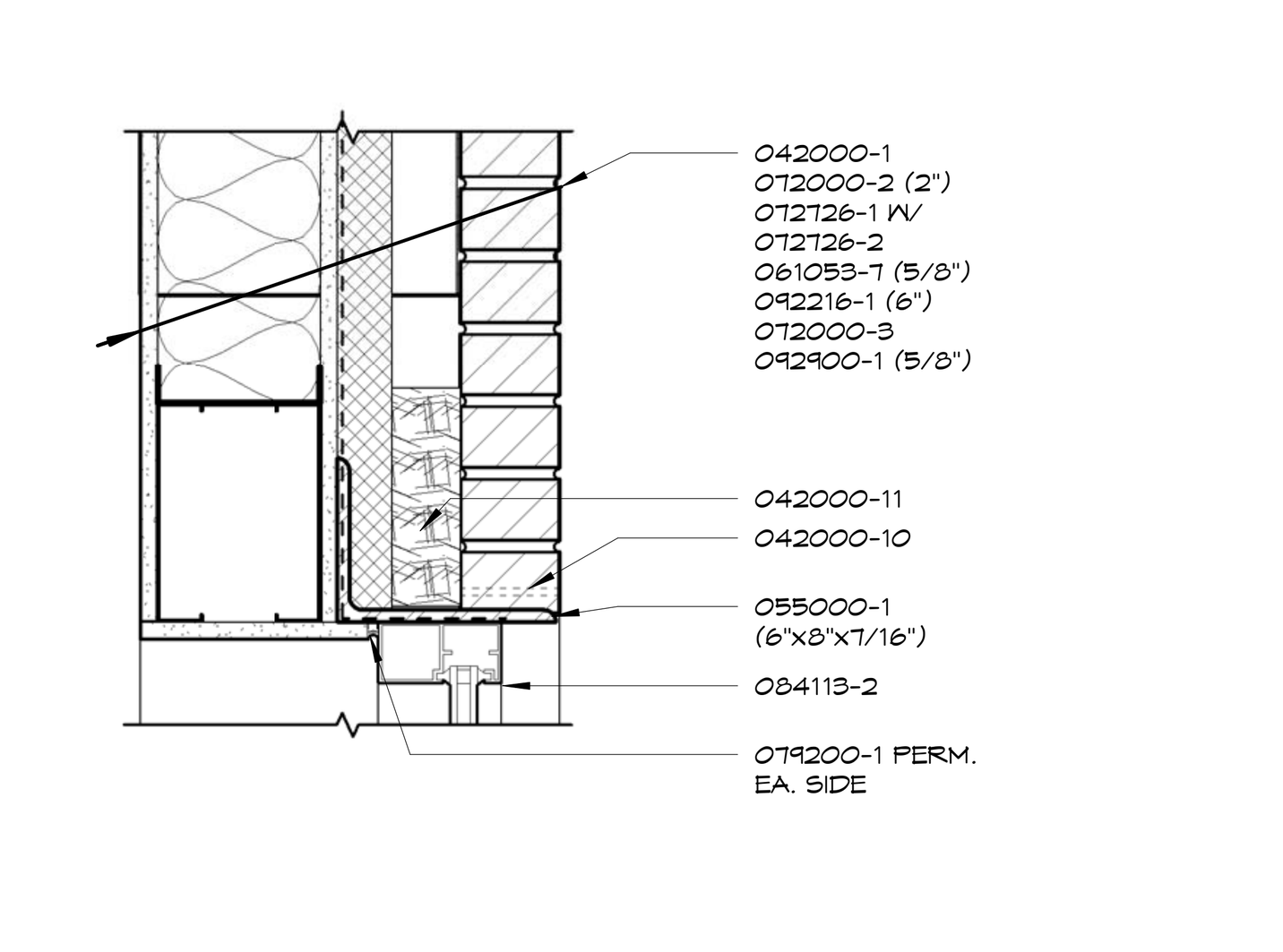

3 ALUM. EXTERIOR HEAD @ BRICK
1 1/2" = 1'-0"

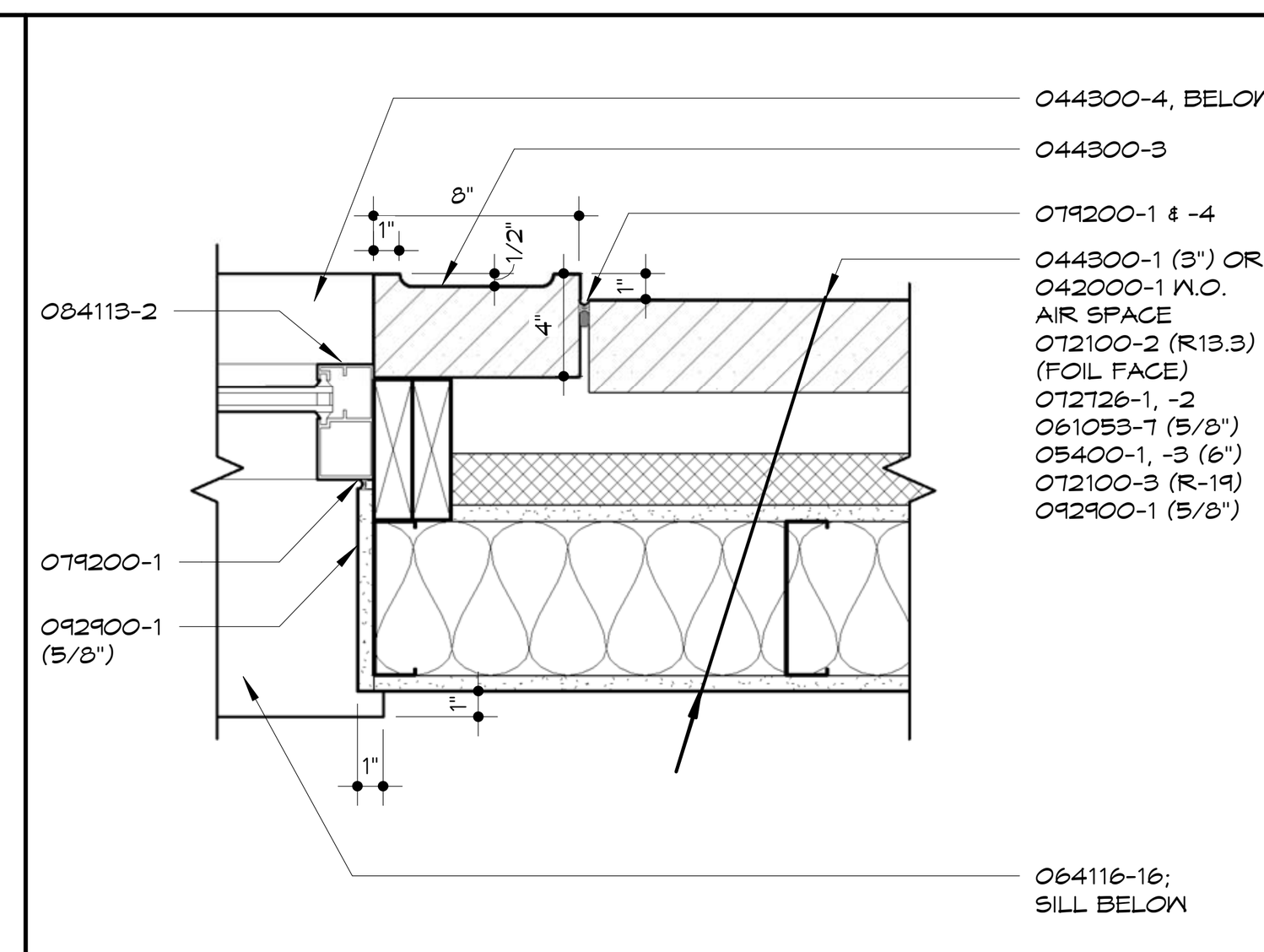

4 ALUMINUM JAMB- EXT.
1 1/2" = 1'-0"

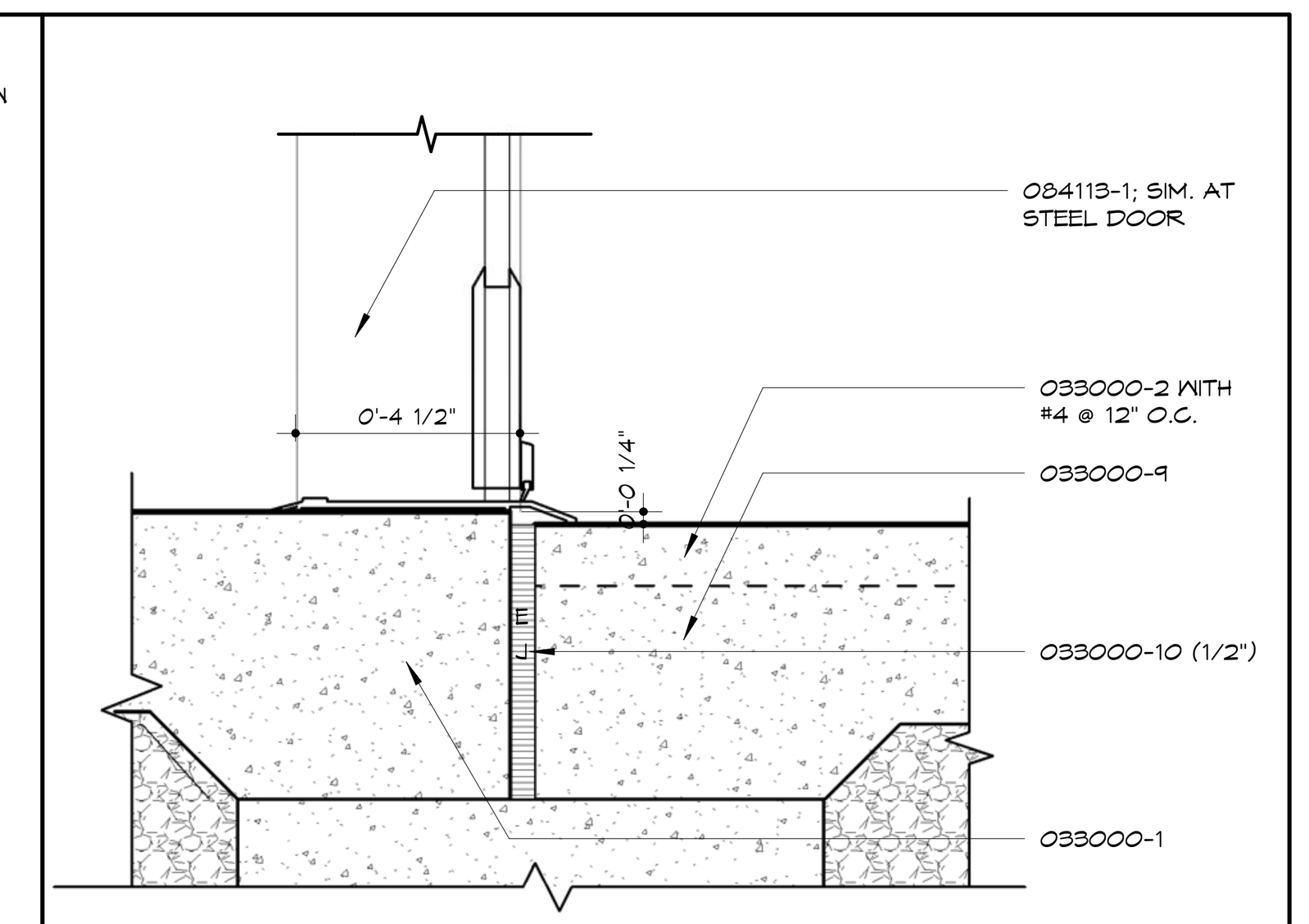

5 EXTERIOR THRESHOLD DETAIL
3" = 1'-0"

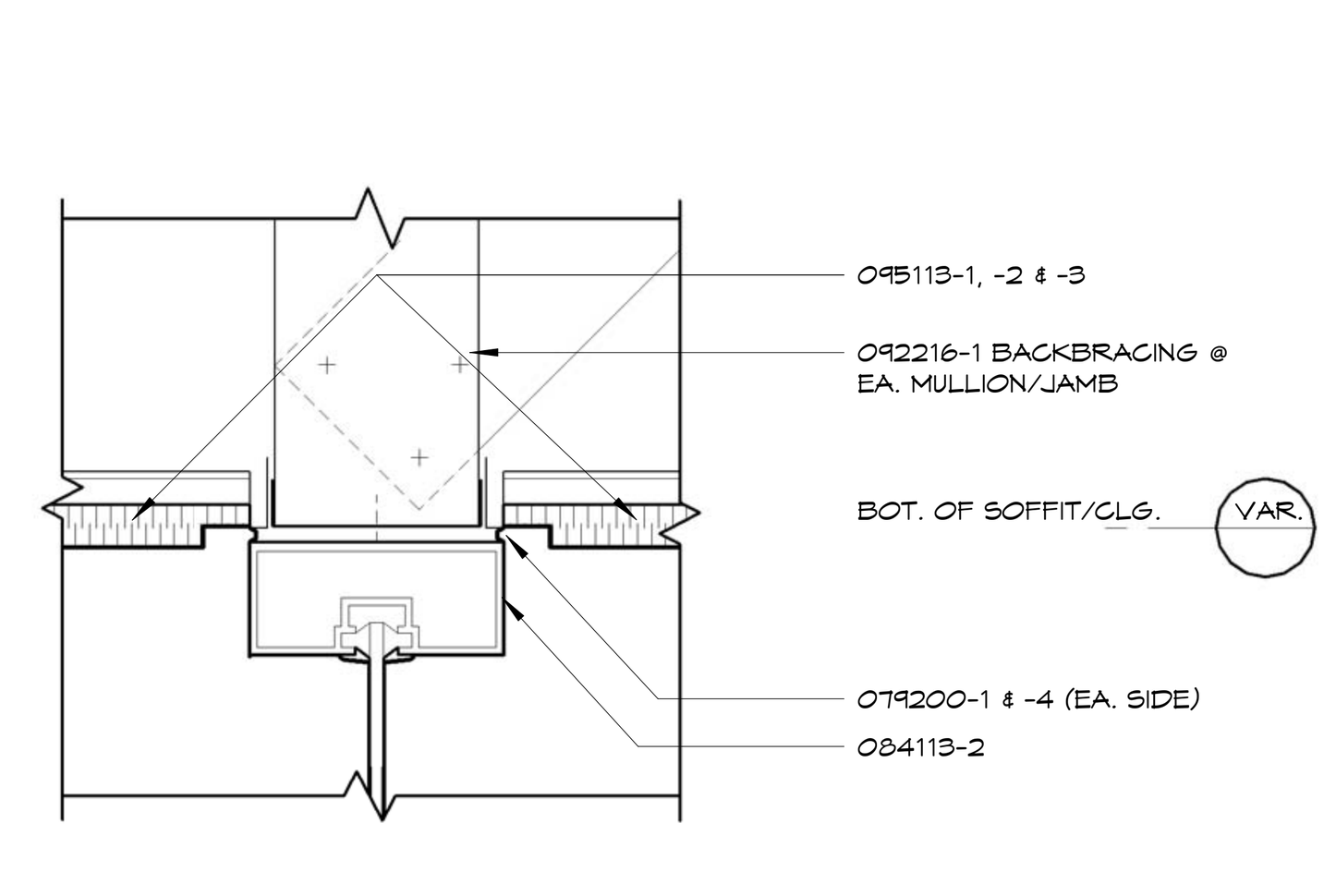

6 ALUM. STOREFRONT FRAME HEAD- VEST.
3" = 1'-0"

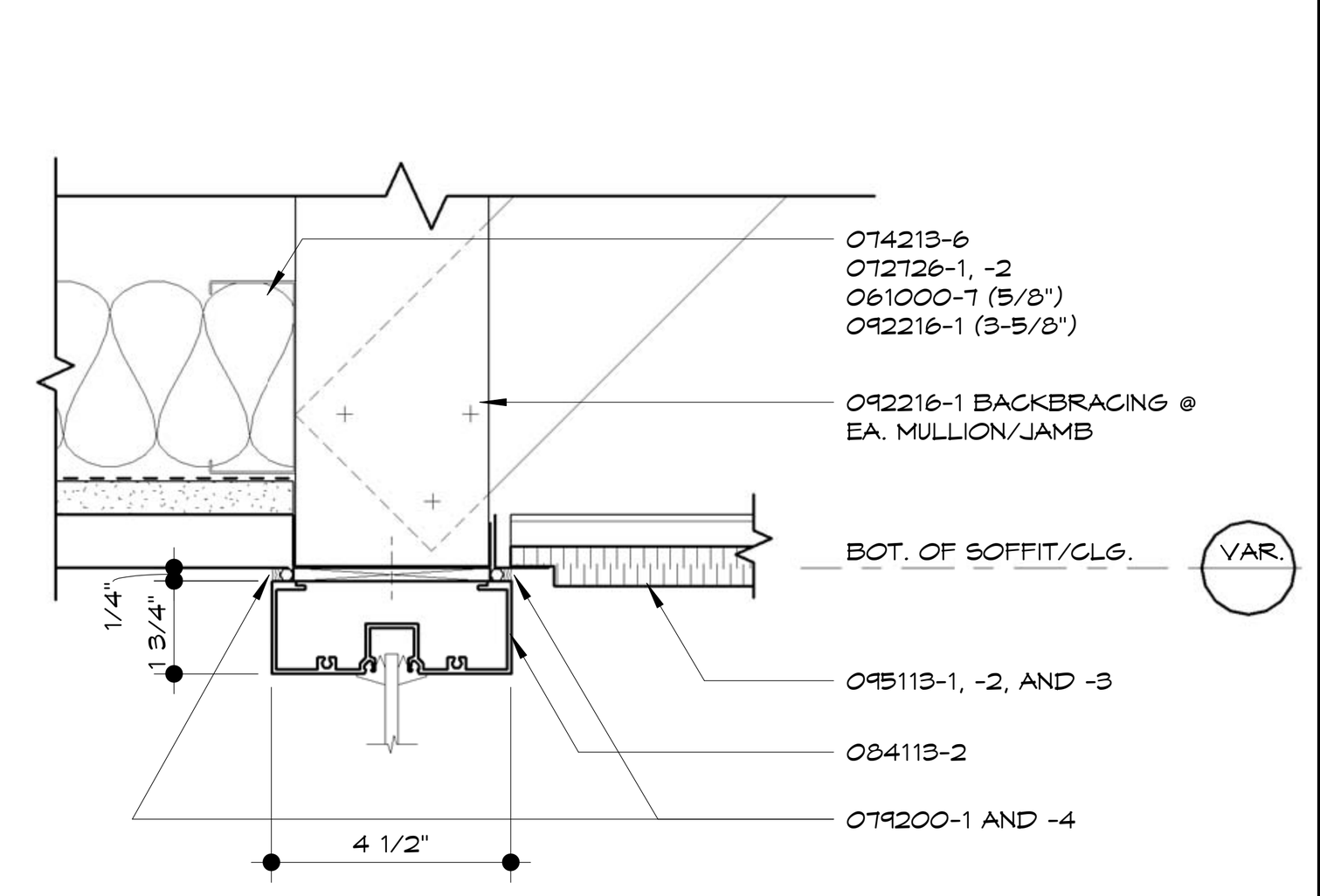

7 ALUM. STOREFRONT FRAME HEAD
3" = 1'-0"

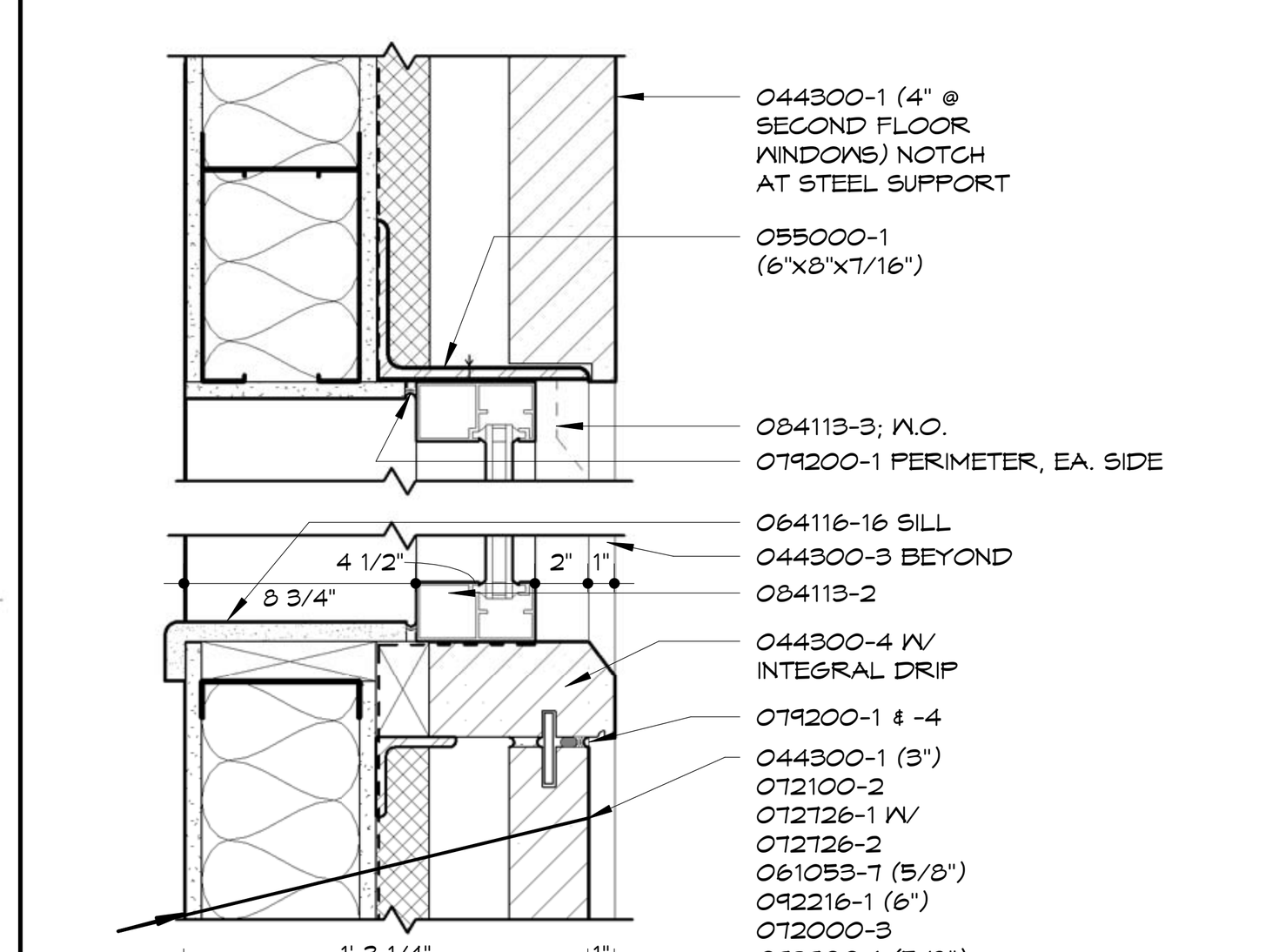

8 ALUM. WINDOW HEAD AND SILL
1 1/2" = 1'-0"

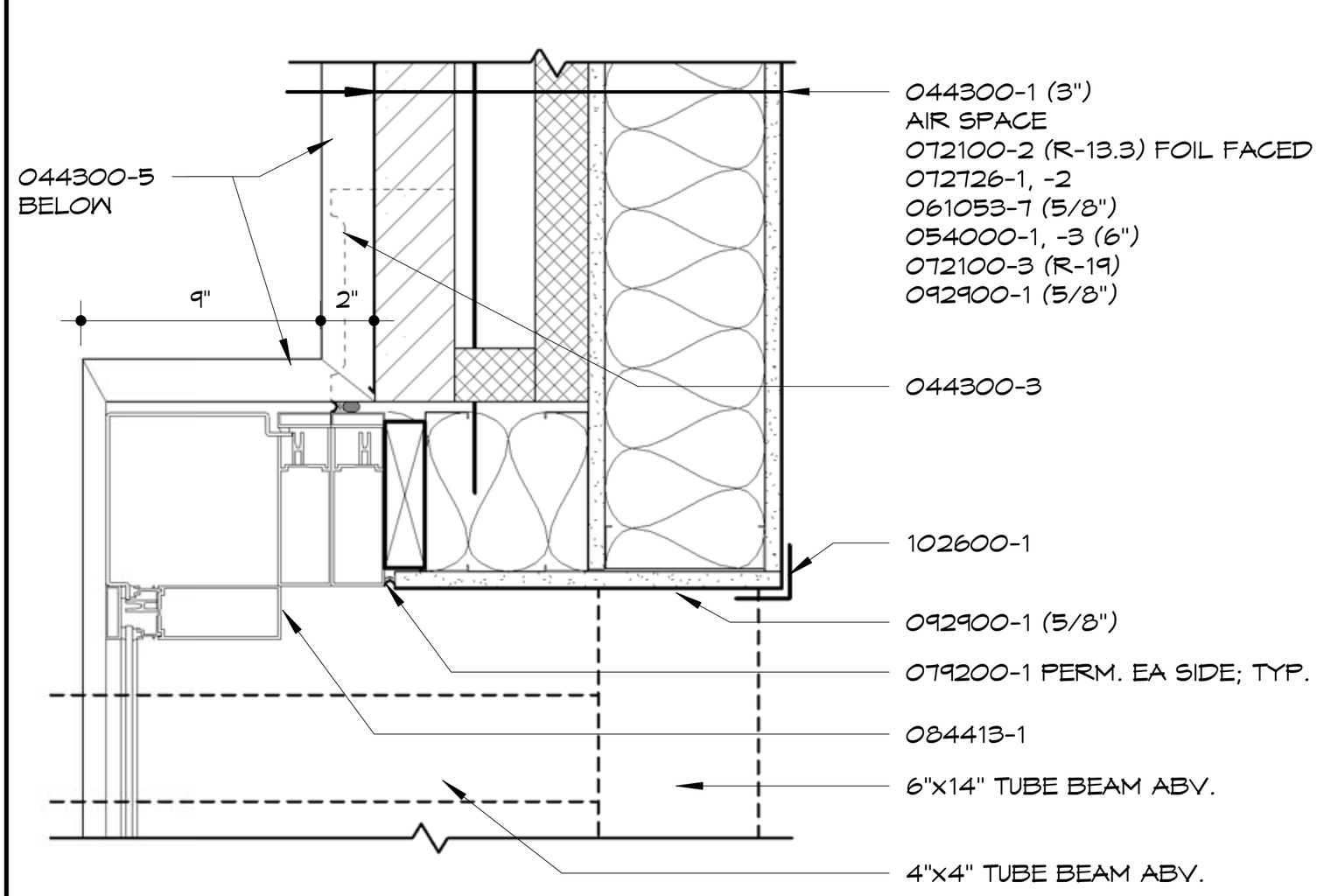

9 SLOPED GLAZING JAMB
1 1/2" = 1'-0"

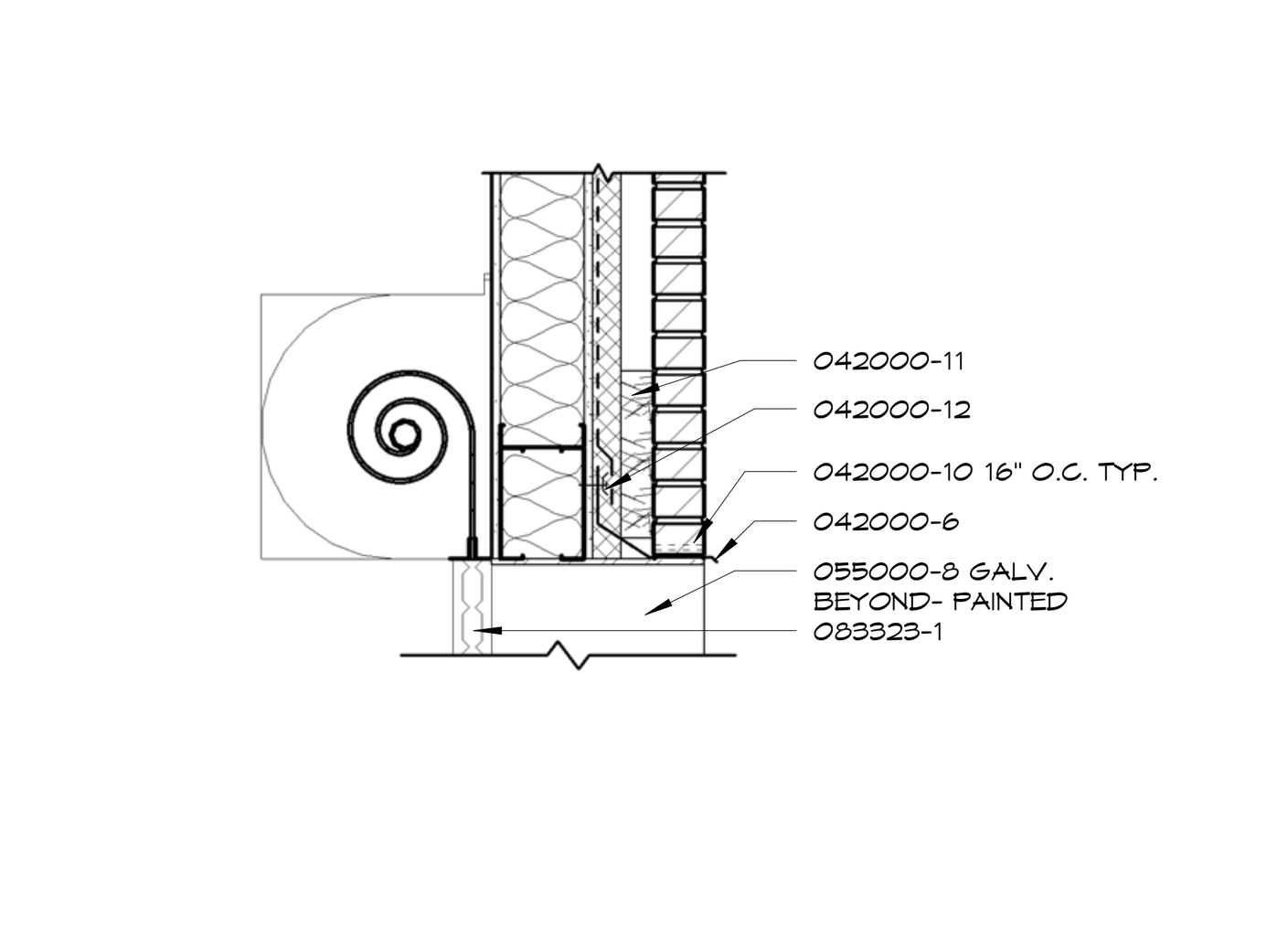

10 OVERHEAD COILING DOOR HEAD - EXT.
3/4" = 1'-0"

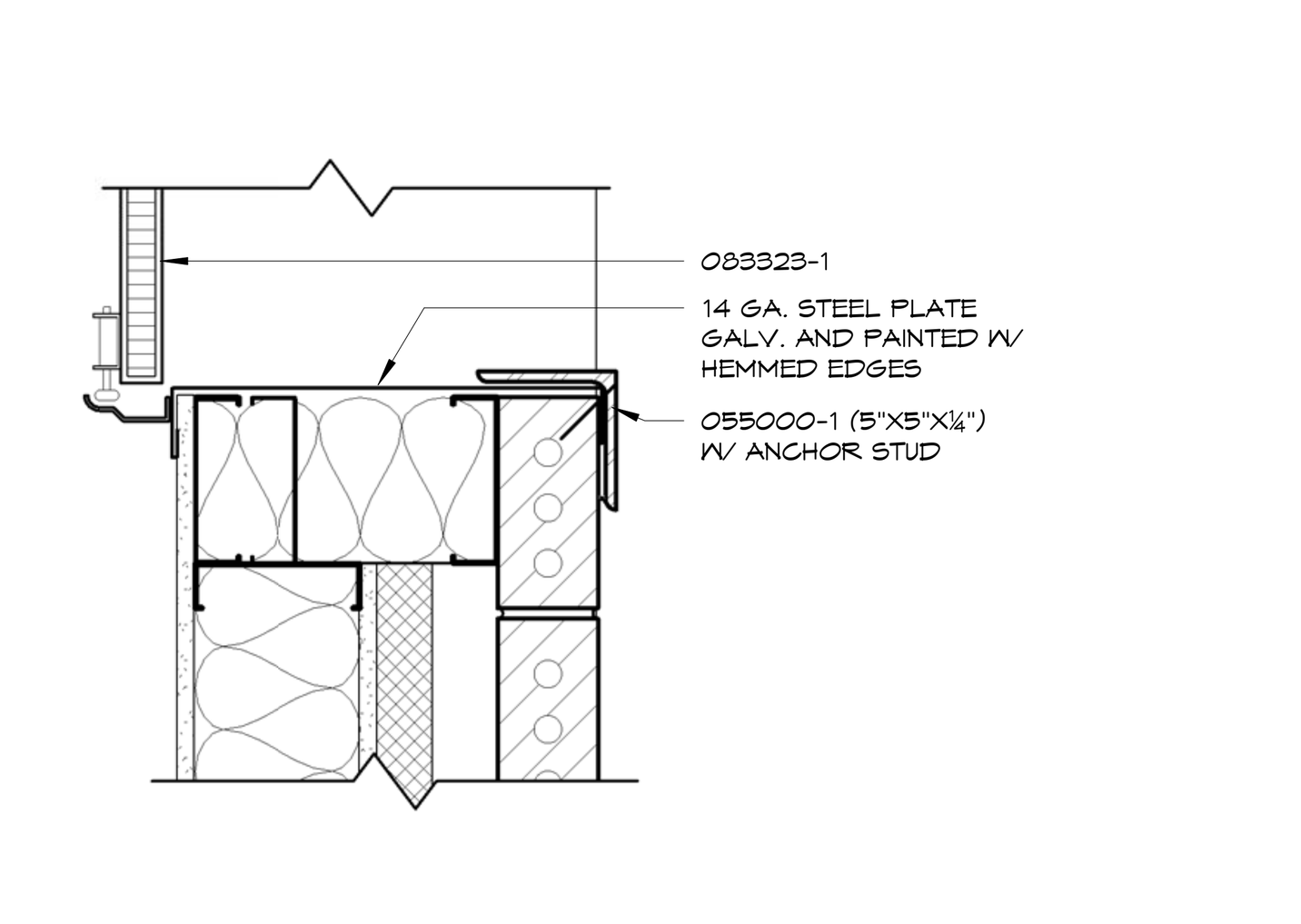

11 OVERHEAD COILING DOOR JAMB
1 1/2" = 1'-0"

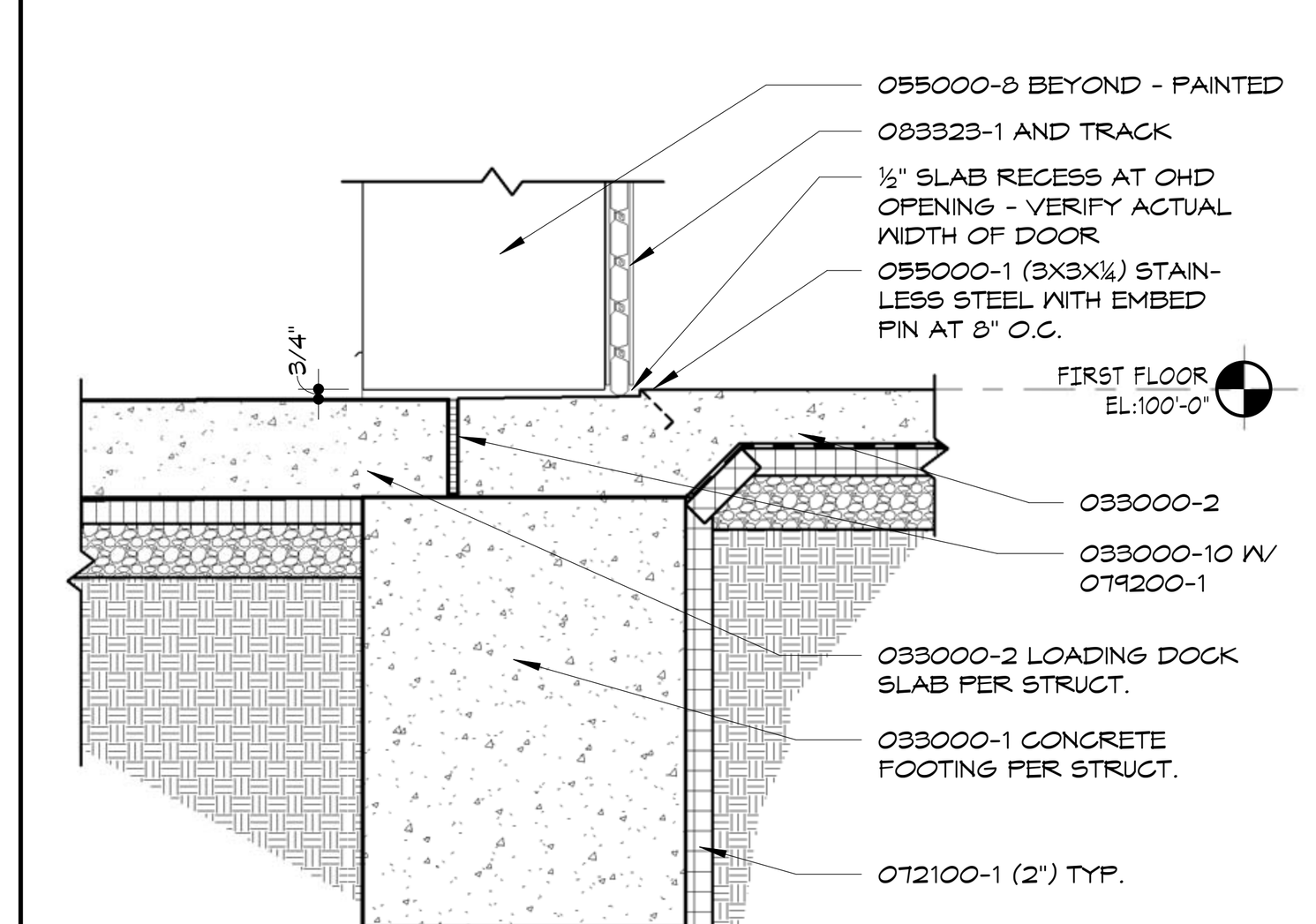

12 OVERHEAD COILING DOOR SILL
3/4" = 1'-0"

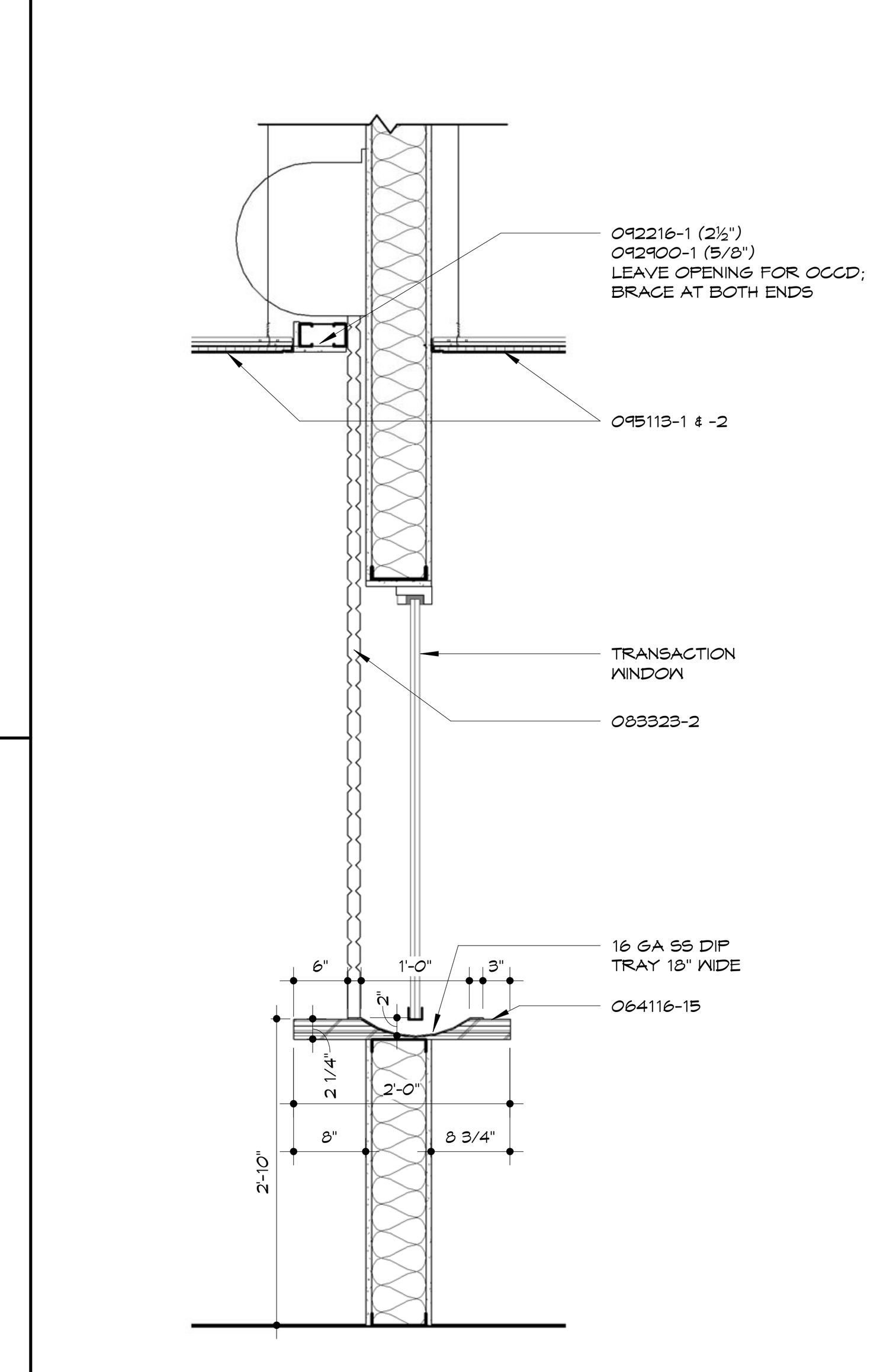

13 ALUM. AT COUNTER
3/4" = 1'-0"

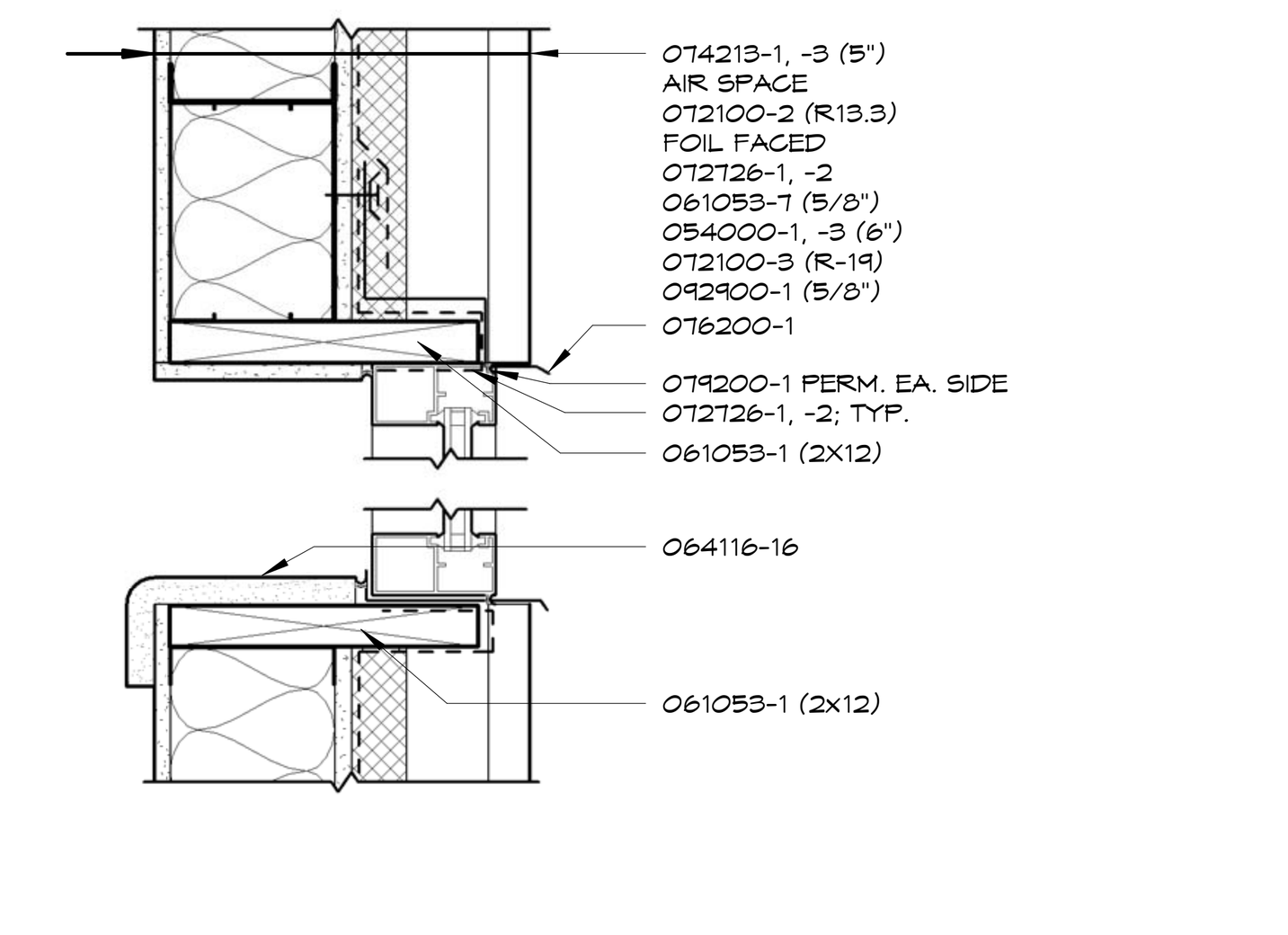

14 ALUM. HEAD AND SILL AT METAL PANEL
1 1/2" = 1'-0"

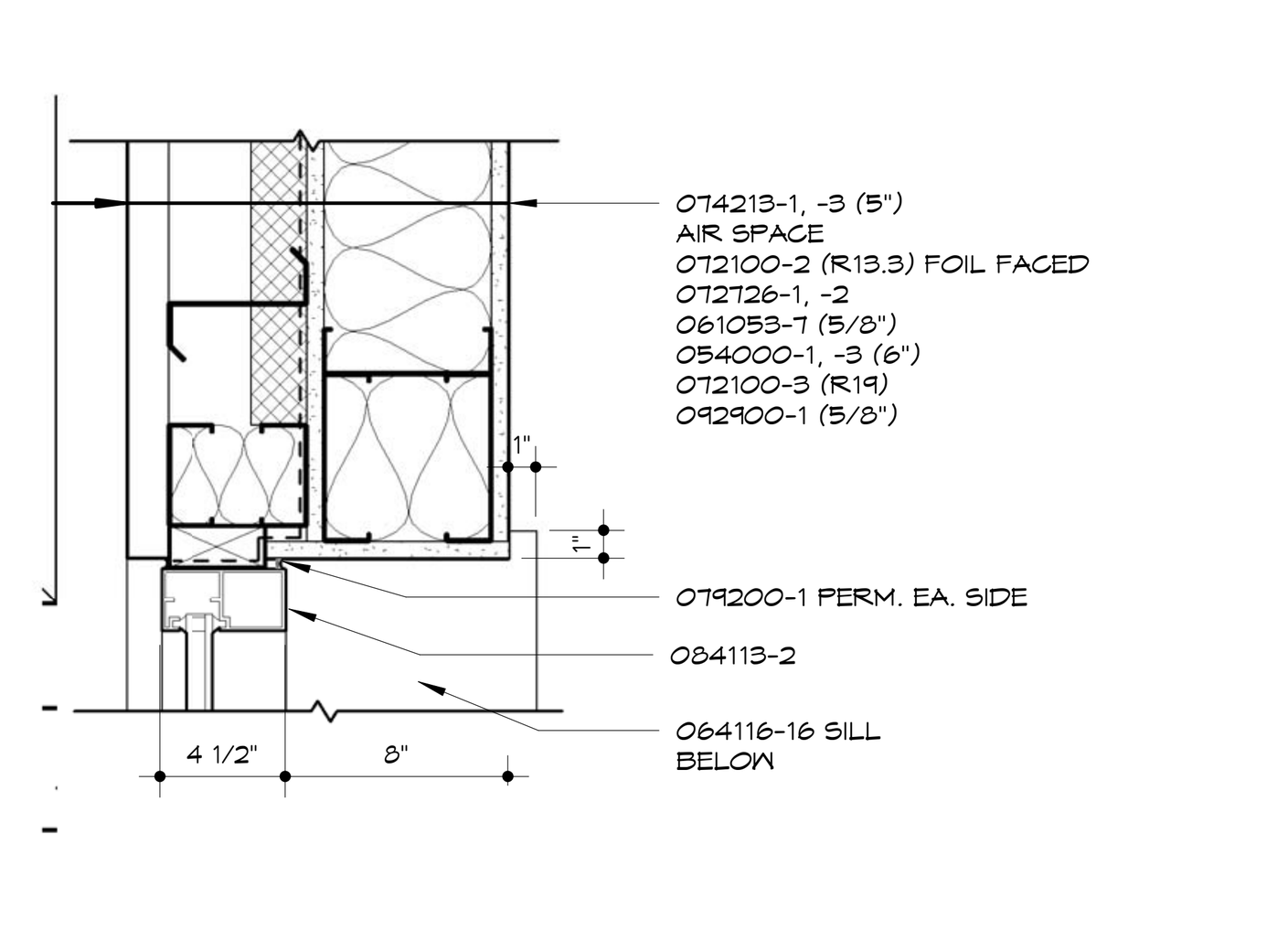

15 ALUM. JAMB AT METAL PANEL
1 1/2" = 1'-0"

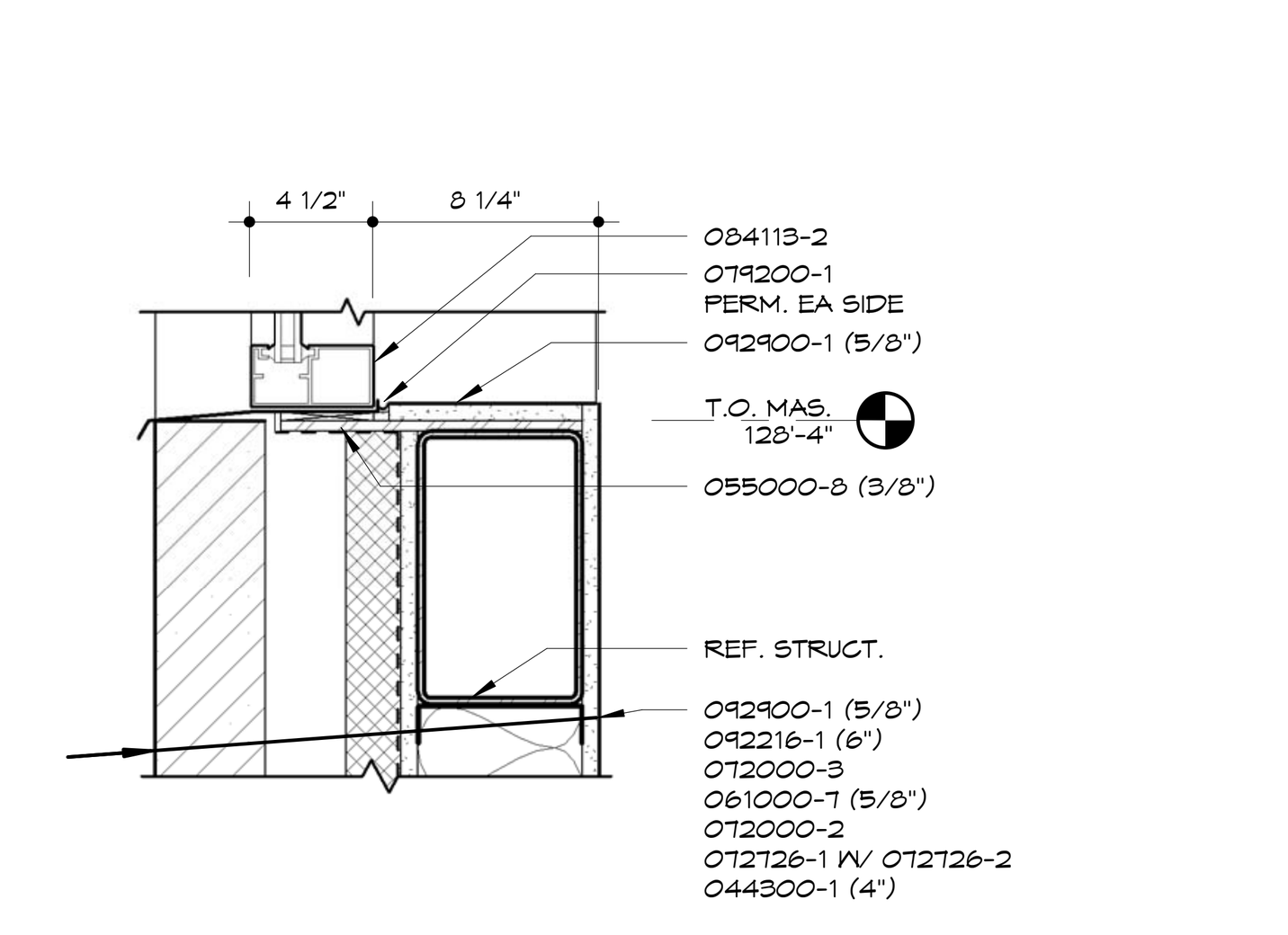

16 CLERESTORY ALUM. WINDOW SILL
1 1/2" = 1'-0"

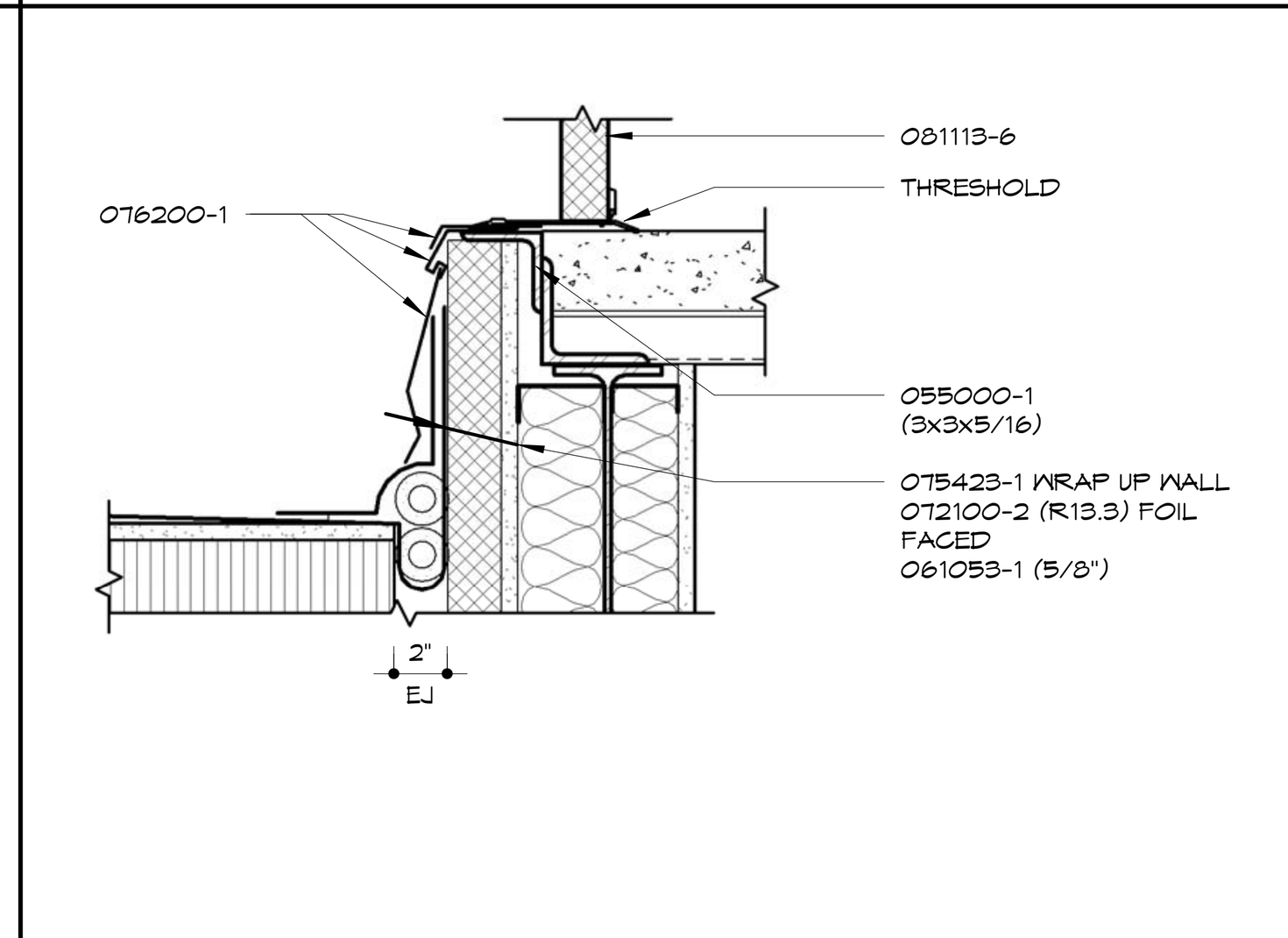

17 DOOR 205 SILL
1 1/2" = 1'-0"

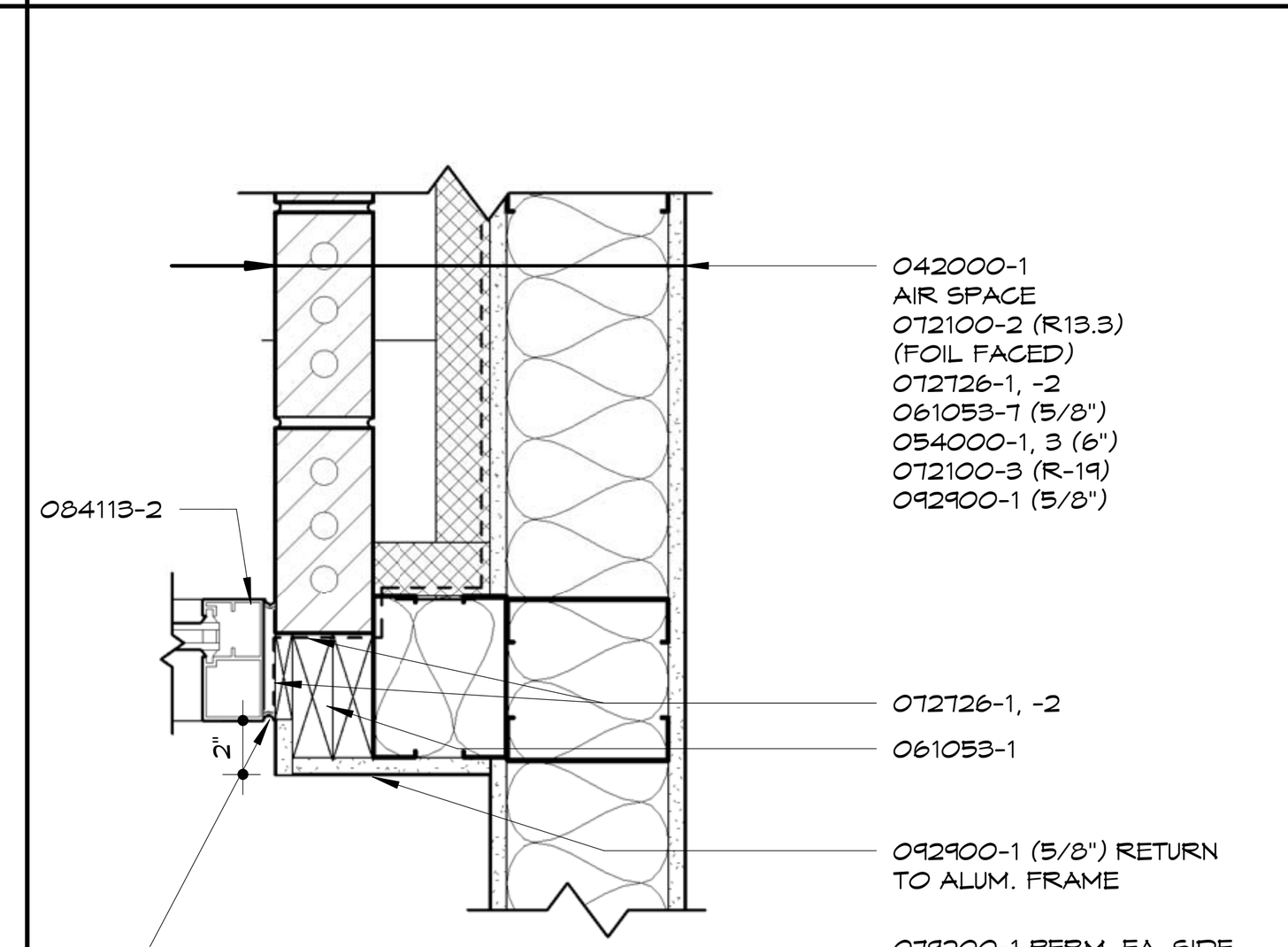

18 DOOR 100.1 JAMB
1 1/2" = 1'-0"

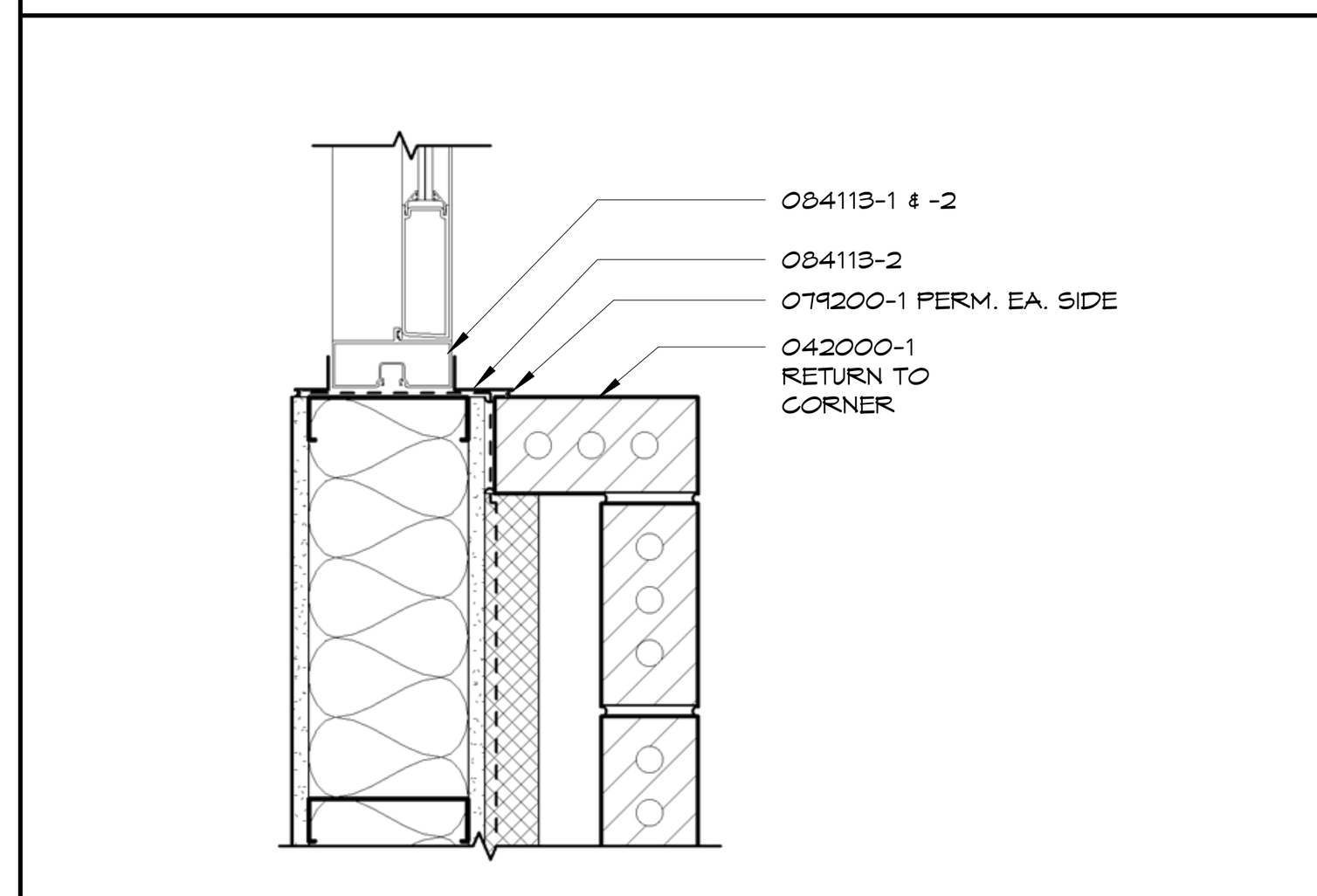

19 EXTERIOR DOOR JAMB
1 1/2" = 1'-0"

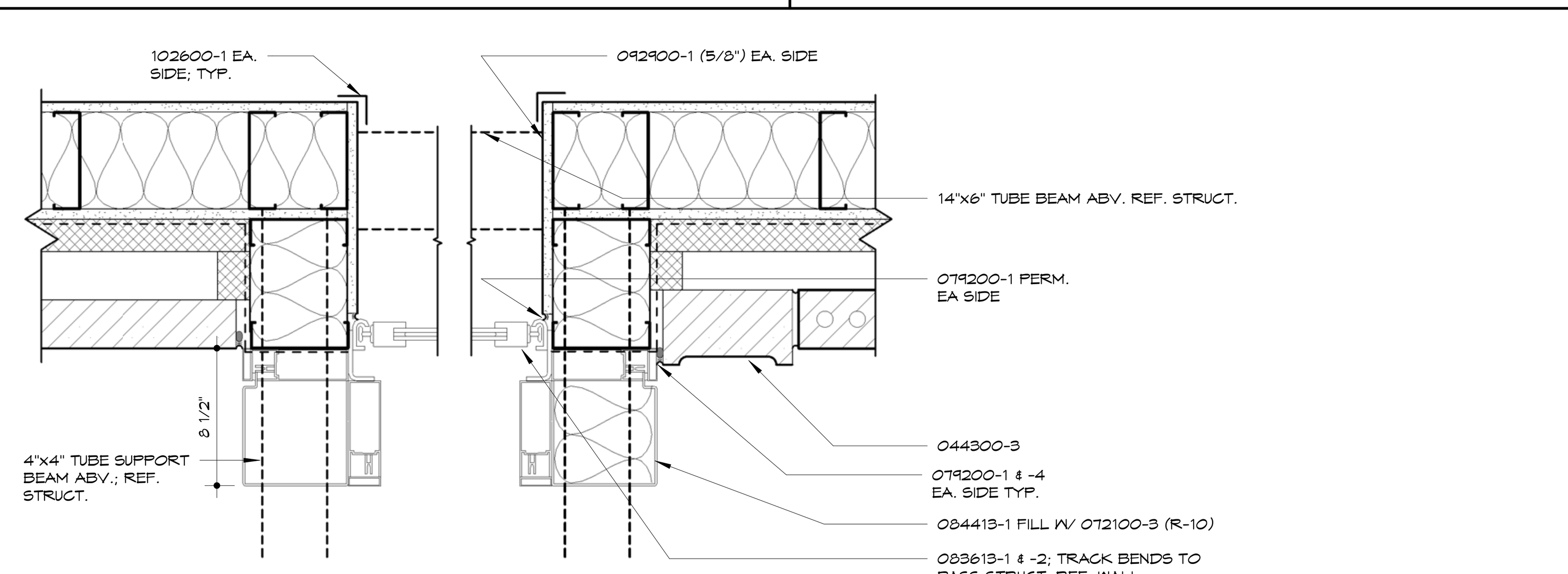

20 SLIDING GARAGE DOOR JAMB
1 1/2" = 1'-0"

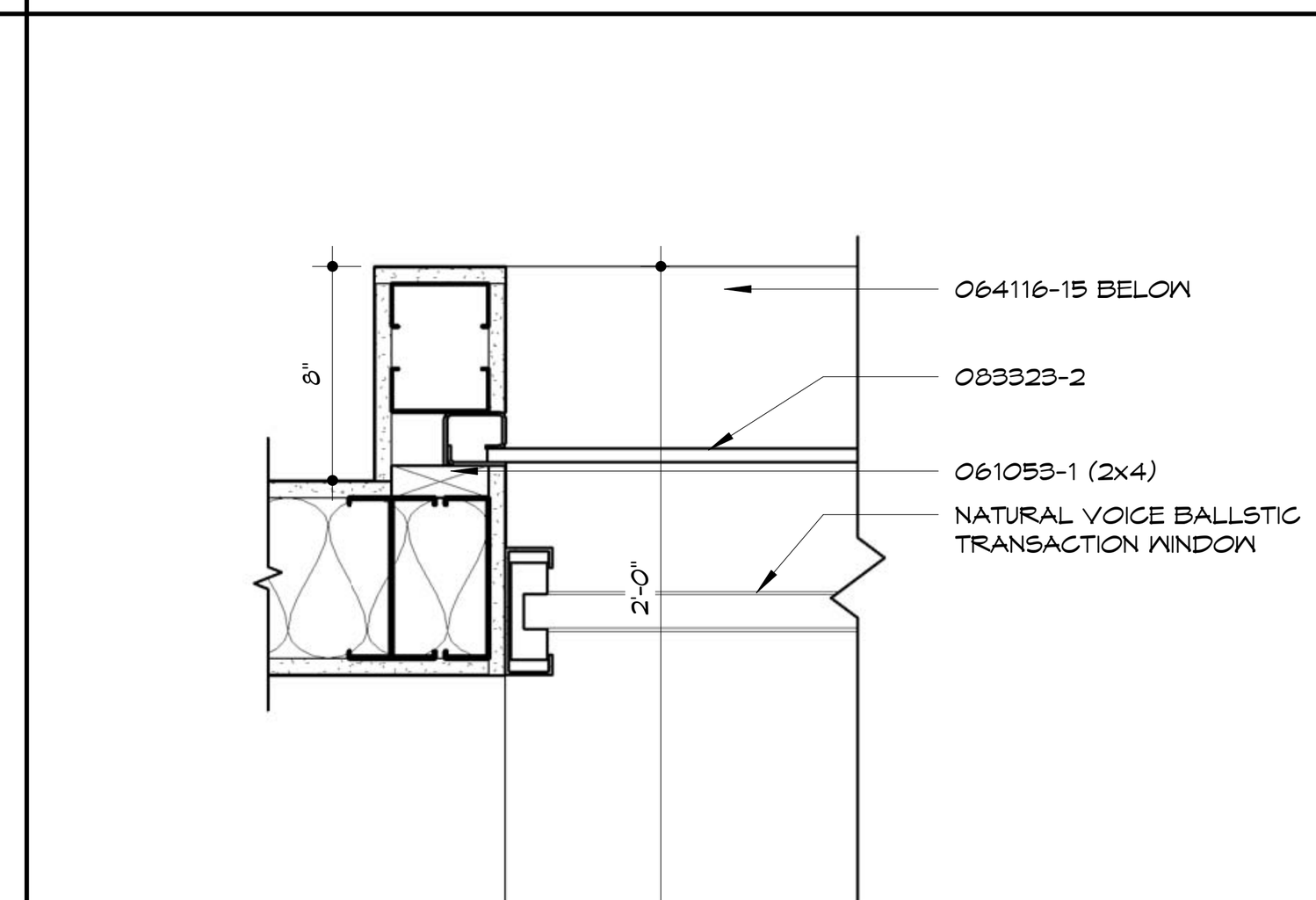

21 INTERIOR OCCD JAMB
1 1/2" = 1'-0"

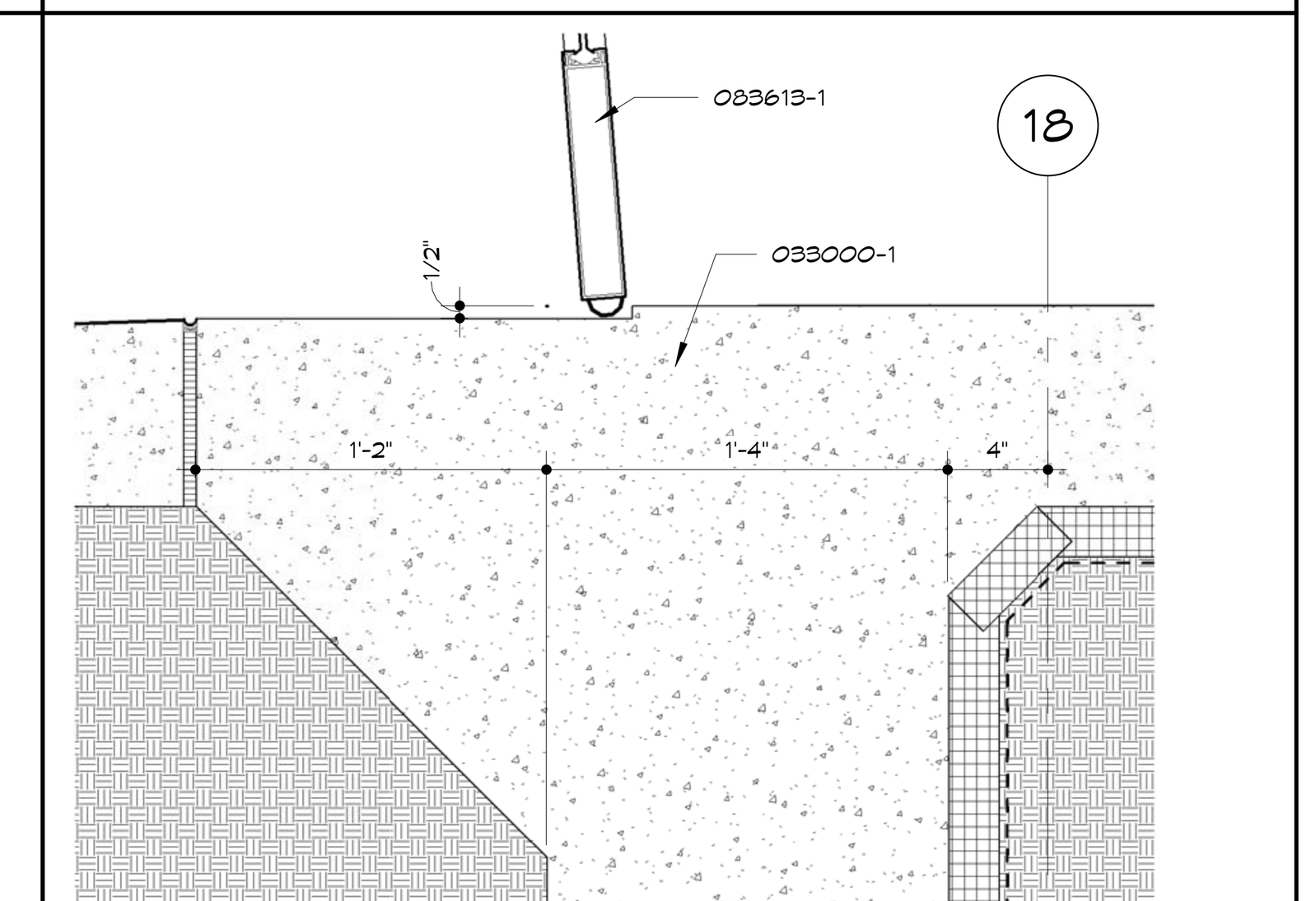

22 SECTIONAL OVERHEAD DOOR SILL
1 1/2" = 1'-0"

KEYNOTES

Note: Keynotes are drawn from a master list & may not be sequentially numbered. Sizes (Ex: 2x4) or other info. following keynote on drawings indicates criteria for those materials/locations which may differ from std. material specified.

033000	-1	Concrete Structure
	-2	Concrete Floor Slab
	-3	Vapor Barrier
	-4	Welded Wire Fabric
	-5	Steel Reinforcing Bar
	-6	Rustication Joint
	-7	Waterstop
	-8	Dovetail Anchor
	-9	Sidewalk
	-10	Premolded Joint Filler
035300	-1	Concrete Topping
042000	-1	Face Brick
	-2	Concrete Masonry Unit - Normal Weight (")
	-3	Concrete Masonry Unit - Lightweight (")
	-4	Wire Reinforcing
	-5	Metal Tie/Anchor
	-6	Through Wall Flashing
	-7	Control Joint Strip
	-8	Bond Beam (")
	-9	Compressible Filler
	-10	Weep Hole
	-11	Cavity Drainage Material
	-12	Termination Bar
044300	-1	Stone Masonry
	-2	Anchor
	-3	Stone Jamb
	-4	Stone Sill
	-5	Belt Course
047200	-1	Cast Stone
051200	-1	Steel Beams
	-2	Steel Column
	-3	Steel Tube
	-4	Steel Channel
052100	-1	Steel Joist
	-2	Joist - Extended End
	-3	Joist - Ceiling Extension
053100	-1	Metal Decking
	-3	Steel Composite Decking
	-2	Flexible Closure Strips
054000	-1	Structural Steel Studs
	-2	Structural Steel Joists
	-3	"C" Closure
055000	-1	Steel Angle
	-4	Steel Channel
	-5	Steel Lintel
	-6	Steel Pipe
	-7	Steel Tube
	-8	Steel Plate
	-9	Steel Ladder
	-10	Steel Bollard
055100	-1	Steel Stairs
	-2	Steel Stair Stringer
	-3	Steel Embed Plate
055213	-1	Steel Pipe Handrail
	-2	Steel Pipe Rail/Post
	-3	Steel Handrail Wall Bracket
	-4	Steel Rod
055300	-1	Steel Grating
	-2	Steel Frame
057300	-1	Decorative Metal Railings
057500	-1	Ornamental Metal Stamped Grille
061053	-1	2x Wood Nailer (")
	-2	2x Wood Blocking (")
	-3	1x Wood Continuous (")
	-4	Plywood (")
	-5	#30 Felt
	-6	#15 Felt
	-7	Sheathing (")
064116	-1	Interior Architectural Woodwork
	-2	High Pressure Laminate
	-3	Cabinet Liner Laminate
	-4	Particle Board
	-5	Plywood
	-6	3mm Edge Molding
	-7	Solid Wood Blocking
	-8	Hardwood
	-9	Steel Tube/Leg Frame
	-10	Door Hinge
	-11	Door/Drawer Pull
	-12	Magnetic Catch
	-13	Drawer
	-14	Shelf Supports
	-15	Countertop
	-16	Solid-Surfacing Material
071113	-1	Bituminous Dampproofing
071326	-1	Self-Adhering Sheet Waterproofing
072100	-1	Foundation Wall or Under Slab Insulation (R-)
	-2	Cavity Wall Insulation (R-)
	-3	Building Insulation - Unfaced (R-)
	-4	Building Insulation - Faced (R-)
	-5	Sill Sealer
	-6	Safing Insulation
072726	-1	Fluid Applied Membrane Air Barrier
	-2	Flashing Tape
074213	-1	Metal Wall Panel (Type 1)
	-2	Trim
	-3	Z-Furring (")
	-4	Metal Wall Panel (Type 2)
	-5	Metal Soffit Panel
075423	-1	Thermoplastic Polyolefin (TPO) Roofing
	-2	Roof Insulation Flat
	-3	Roof Insulation Tapered
	-4	Roof Expansion Joint
	-5	Coverboard
	-6	Walkway Protection Board
076200	-1	Sheet Metal Flashing and Counterflashing
	-2	Pre-finished Roof Edge
	-3	Pre-finished Coping
	-4	Sheet Metal Reglet
	-5	Sheet Metal Gutter
	-6	Sheet Metal Downspout
	-7	Sheet Metal Scupper
077129	-1	Roof Expansion Joint
077200	-1	Roof Hatch/Ladder
078413	-1	Penetration Firestopping
078443	-1	Joint Firestopping
079200	-1	Sealant - Rake where required
	-2	Joint Filler
	-3	Gasket
	-4	Backer Rod
079500	-1	Expansion Control
081113	-1	Steel Door
	-2	Steel Frame
	-3	Frame Anchor
	-4	Louver
	-5	Plaster Guard
	-6	FPR Door
081416	-1	Flush Wood Door
083113	-1	Access Door
	-2	Access Door Frame
	-3	Floor Access Door
083323	-1	Overhead Coiling Door
	-2	Coiling Counter Door
083613	-1	Sectional Overhead Door
	-2	Sectional Overhead Door Track
	-3	Weatherstripping
084113	-1	Aluminum Entrance Door
	-2	Aluminum Entrance Frame
	-3	Sunshade
	-4	Aluminum Subsill
084413	-1	Glazed Aluminum Curtain Wall
	-2	Threshold
	-3	Sunshade Louver
	-4	Aluminum Subsill
087100	-1	Track Hardware
088000	-1	Glazing (as scheduled)
088853	-1	Securtiy Glazing (as scheduled)
089119	-1	Louvers and Vents
092216	-1	Steel Stud (")
	-2	Steel Stud Runner (")
	-3	Furring Channel (")
092400	-1	Portland Cement Plastering
	-2	Metal Lath
	-3	Casing Bead
092900	-1	Gypsum Board (")
	-2	Fire Rated Gypsum Board (")
	-3	Cementitious Tile Backer Panel
	-4	Metal Suspension System
	-5	Acoustical Sealant
	-6	Acoustical Insulation (")
	-7	Metal Edge Trim
	-8	Auxiliary Support Framing
	-9	Metal Control Joint
	-10	High Impact Gypsum Board
	-11	Concrete Interior Finishing Compound
	-12	Stiffener
093000	-1	Porcelain Wall Tile (" x ")
	-2	Shower Pan
	-3	Shower Pan Flashing
	-4	Porcelain Floor Tile (" x ")
	-5	Tile Base
	-6	Tile Cap
	-7	Setting Bed
	-8	Uncoupling water-proof membrane
	-9	Shower Splashguard
	-10	Shower Niche
095113	-1	Acoustical Panel ('x ') (F = Fire Rated)
	-2	Ceiling Suspension System
	-3	Edge Mold Trim
	-4	Auxiliary Support Framing
096513	-1	Resilient Tile Flooring
	-2	Resilient Wall Base
	-3	Edge Strip
	-4	Tactile Warning Surface
	-5	Resilient Stair Tread
	-6	Resilient Stair Riser
	-7	Resilient Stringer Skirt
	-8	Resilient Stair Nose
096813	-1	Carpet Tile
096900	-1	Access Flooring
099113	-1	Exterior Painting
099123	-1	Interior Painting
099635	-1	Secondary Containment Coating System
101400	-1	Signage
102113	-1	Toilet Partition
	-2	Urinal Screen
102213	-1	Wire Mesh Partitions
102600	-1	Impact-Resistant Cornerguard
102800	-1	Tissue Dispenser
	-2	Framed Mirror
	-3	Sanitary Napkin Disposer
	-4	Grab Bar
	-5	Shower Seat
	-6	Shower Curtain Rod
	-7	Coat/Robe Hook
	-8	Shower Curtain
104413	-1	Fire Extinguisher Cabinet
104416	-1	Fire Extinguisher
105113	-1	Personnel Locker
	-2	Locker
	-3	Bench
105300	-1	Pre- Manufactured Canopies
107500	-1	Flagpole
108113	-1	Deterrent Spikes
122413	-1	Roller Window Shades
133600	-1	Spray Painting Booth
142400	-1	Hydraulic Elevator
311000	-1	Site Clearing
312000	-1	Earth Moving
	-2	Interior Fill
	-3	Exterior Fill
	-4	Granular Drainage Course
	-5	Subbase Course
321313	-1	Concrete Paving
334600	-1	Perforated Wall Pipe & Fittings
	-2	Geotextile Filter Fabric (Flat/Sock)
	-3	Drainage Panel

NOTE: REFER TO STRUCTURAL DRAWINGS FOR REINFORCING STEEL IN EXTERIOR WALLS AND CONCRETE NOT SHOWN

NOTE: REFER TO ALL DETAILS (DETAILS LOCATED ON THIS SHEET, PRECEEDING SHEETS AND FOLLOWING SHEETS) FOR APPLICABLE NOTES NOT SHOWN

NOTE: REFER TO ALL SECTIONS (SECTIONS LOCATED ON THIS SHEET, PRECEEDING SHEETS AND FOLLOWING SHEETS) FOR APPLICABLE NOTES NOT SHOWN

HTK ARCHITECTS PA
900 S. KANSAS AVE., SUITE 200
TOPEKA KANSAS 66112
P 785.266.5373
9300 W 110TH ST. STE. 150
OVERLAND PARK, KANSAS 66210
P 913.663.5373
www.htkarchitects.com

R. KEITH BLACKBURN LICENSED 3435 4-15-15 KANSAS PROFESSIONAL ARCHITECT

DENNIS A. HAUG LICENSED 4-15-15 2567 KANSAS PROFESSIONAL ARCHITECT

DATE:
- 4-15-15

REVISED DATE:
- 12-18-14
- 2-9-15
- 3-10-15
-

HTK PROJECT NUMBER:
- 1410.03

Department of Administration
Office of Facilities and Procurement Management
800 SW Jackson, Suite 700
Topeka, Kansas 66612-1216
Phone 785-296-8899
FAX 785-296-3456

STATE OF KANSAS
STATE OF KANSAS ENERGY & SERVICE CENTER
221 SW 7th Street
BUILDING NUMBER 17300-0038

DATE: 4-15-15 DRAWN BY: Author CHECKED BY: Checker REV:

DOOR, FRAME, & WINDOW DETAILS

A-012651

A502

CONSTRUCTION DOCUMENTS

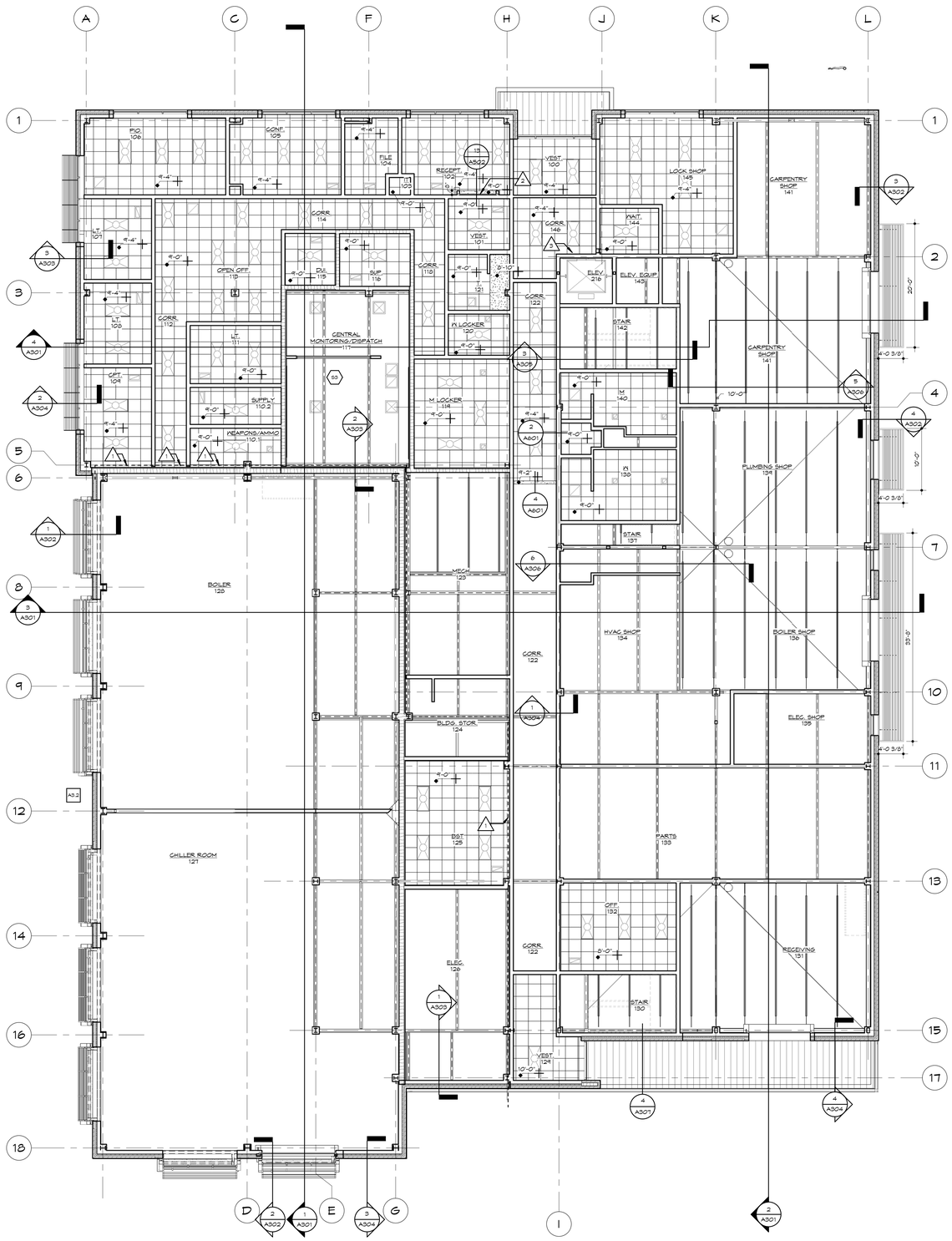

1 FIRST FLOOR
1/8" = 1'-0"

NORTH

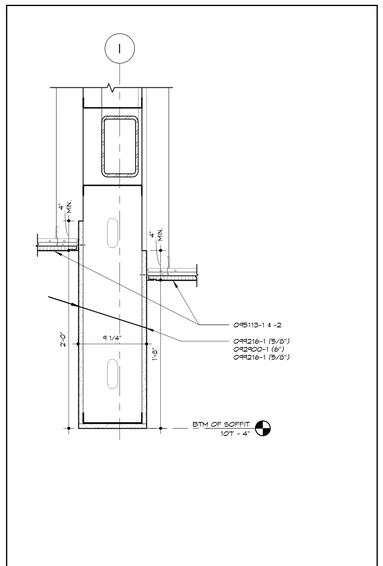

2 CEILING AT RESTROOM ENTRIES
1 1/2" = 1'-0"

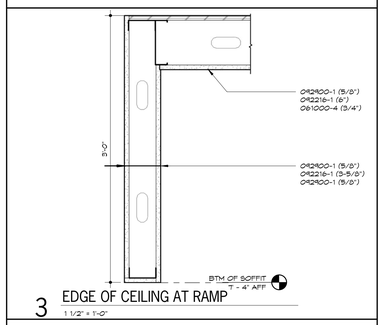

3 EDGE OF CEILING AT RAMP
1 1/2" = 1'-0"

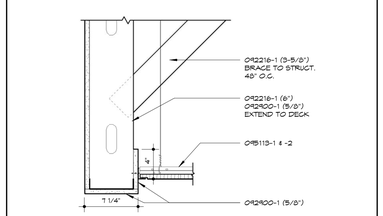

4 TYP. BULKHEAD
1 1/2" = 1'-0"

REFLECTED CEILING PLAN LEGEND

- 2'-0" X 2'-0" ACOUSTICAL CEILING TILE & GRID
- PAINTED GYP. BD. & MTL. STUD SOFFIT
- 2'-0" X 2'-0" LIGHT FIXTURE, REF. ELEC.
- 2'-0" X 4'-0" LIGHT FIXTURE, REF. ELEC.
- CEILING REGISTER, REF. MECH.
- CEILING RETURN, REF. MECH.
- METAL PANEL SOFFIT
- 0' - 0" CEILING HEIGHT OFF FLOOR.

REFLECTED CEILING PLAN NOTES

GENERAL: COORDINATE WITH WORK SHOWN ON STRUCTURAL, MECHANICAL, PLUMBING, AND ELECTRICAL DRAWINGS, REF. FE SHEET FOR EQUIP. COORDINATION

1. PROVIDE EXPANSION JOINT COVER.
2. PROVIDE OPENING IN GYP. SOFFIT FOR COILING FIRE DOOR.
3. PROVIDE OPENING FOR SMOKE CURTAIN.

HTK ARCHITECTS PA
9300 W 110TH ST. STE. 150
OVERLAND PARK, KANSAS 66210
P 913.663.5373
900 S. KANSAS AVE., SUITE 200
TOPEKA KANSAS 66112
P 785.266.5373
www.htkarchitects.com

R. KEITH BLACKBURN LICENSED 13435 KANSAS PROFESSIONAL ARCHITECT 4-15-15

DENNIS A. HAUGH LICENSED 2567 KANSAS PROFESSIONAL ARCHITECT 4-15-15

DATE:
- 4-15-15

REVISED DATE:
- 12-18-14
- 2-9-15
- 3-10-15

HTK PROJECT NUMBER:
- 1410.03

Department of Administration
Office of Facilities and
Procurement Management
800 SW Jackson, Suite 700
Topeka, Kansas 66612-1216
Phone 785-296-8899
FAX 785-296-3456

STATE OF KANSAS
STATE OF KANSAS ENERGY & SERVICE CENTER
221 SW 7th Street
BUILDING NUMBER 17300-0038

DATE: 4-15-15 DRAWN BY: Author CHECKED BY: Checker REV:

REFLECTED CEILING PLAN
FIRST FLOOR

A-012651

A601

CONSTRUCTION DOCUMENTS

4/16/2015 11:11:57 AM C:\Users\jms\Documents\REVIT\State of Kansas Energy_Central_jms.rvt

JCSBC
2-2-2016
Att.9G.--0046

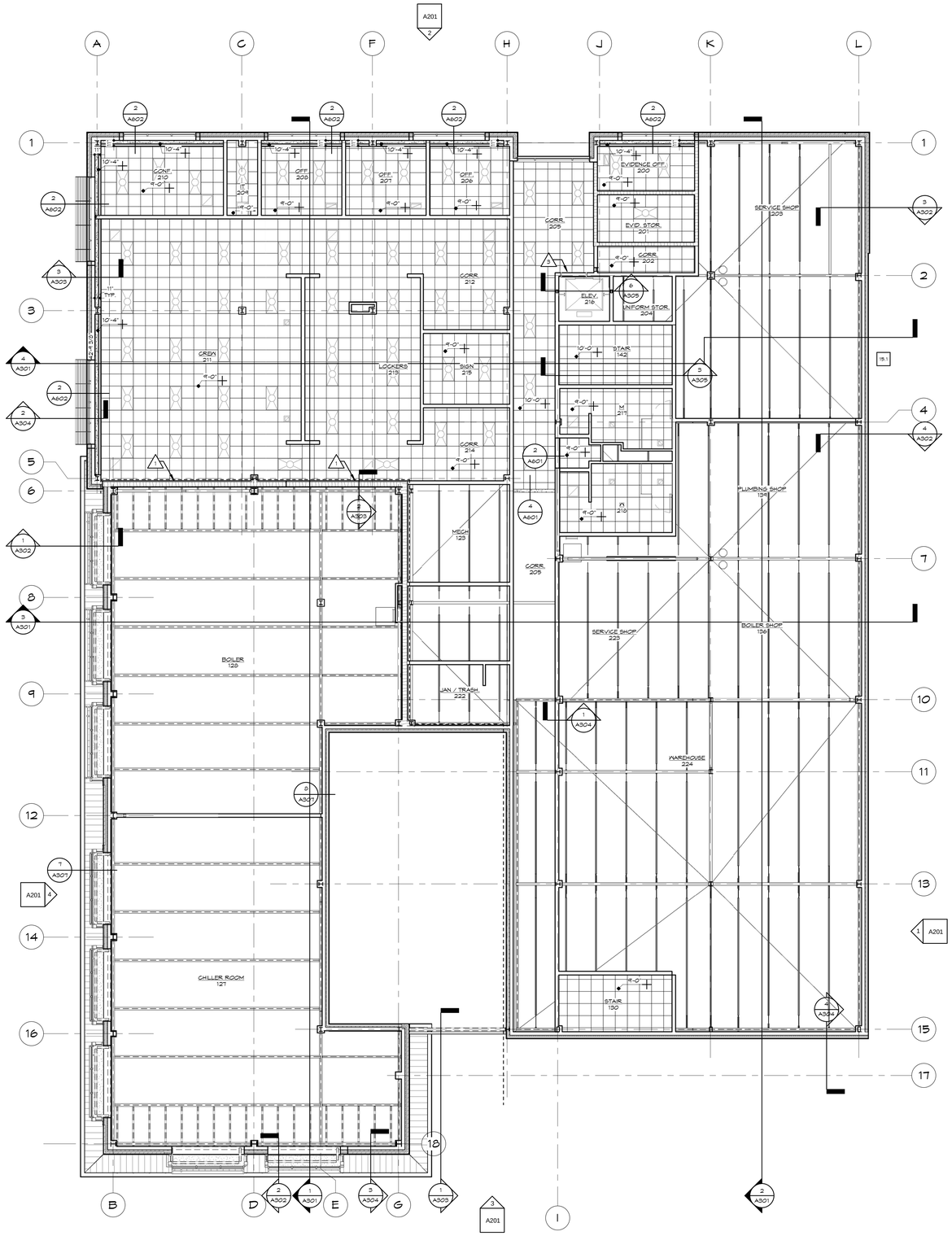

1 SECOND FLOOR
1/8" = 1'-0"

NORTH

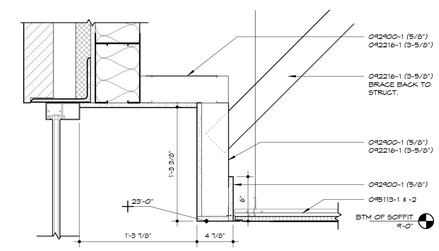

2 CEILING AT OFFICE WINDOW
1 1/2" = 1'-0"

REFLECTED CEILING PLAN LEGEND

- 2'-0" X 2'-0" ACOUSTICAL CEILING TILE & GRID
- PAINTED GYP. BD. & MTL. STUD SOFFIT
- 2'-0" X 2'-0" LIGHT FIXTURE, REF. ELEC.
- 2'-0" X 4'-0" LIGHT FIXTURE, REF. ELEC.
- CEILING REGISTER, REF. MECH.
- CEILING RETURN, REF. MECH.
- METAL PANEL SOFFIT
- 0' - 0" CEILING HEIGHT OFF FLOOR.

REFLECTED CEILING PLAN NOTES

GENERAL: COORDINATE WITH WORK SHOWN ON STRUCTURAL, MECHANICAL, PLUMBING, AND ELECTRICAL DRAWINGS, REF. FE SHEET FOR EQUIP. COORDINATION

1. PROVIDE EXPANSION JOINT COVER.
2. PROVIDE OPENING IN GYP. SOFFIT FOR COILING FIRE DOOR.
3. PROVIDE OPENING FOR SMOKE CURTAIN.

NOTE: REFER TO STRUCTURAL DRAWINGS FOR REINFORCING STEEL IN EXTERIOR WALLS AND CONCRETE NOT SHOWN

NOTE: REFER TO ALL DETAILS (DETAILS LOCATED ON THIS SHEET, PRECEEDING SHEETS AND FOLLOWING SHEETS) FOR APPLICABLE NOTES NOT SHOWN

NOTE: REFER TO ALL SECTIONS (SECTIONS LOCATED ON THIS SHEET, PRECEEDING SHEETS AND FOLLOWING SHEETS) FOR APPLICABLE NOTES NOT SHOWN

HTK ARCHITECTS PA
900 S. KANSAS AVE., SUITE 200
TOPEKA KANSAS 66112
P 785.266.5373
9300 W 110TH ST., STE. 150
OVERLAND PARK, KANSAS 66210
P 913.663.5373
www.htkarchitects.com

DATE:
- 4-15-15

REVISED DATE:
- 12-18-14
- 2-9-15
- 3-10-15

HTK PROJECT NUMBER:
- 1410.03

Department of Administration
Office of Facilities and
Procurement Management
800 SW Jackson, Suite 700
Topeka, Kansas 66612-1216
Phone 785-296-8899
FAX 785-296-3456

STATE OF KANSAS
STATE OF KANSAS ENERGY & SERVICE CENTER
221 SW 7th Street
BUILDING NUMBER 17300-0038

DATE: 4-15-15 DRAWN BY: Author CHECKED BY: Checker REV:

REFLECTED CEILING PLAN
SECOND FLOOR

A-012651

A602

CONSTRUCTION DOCUMENTS

4/16/2015 11:12:04 AM C:\Users\jms\Documents\REVIT\State of Kansas Energy_Central_jms.rvt

JCSBC
2-2-2016
Att.9G.--0047

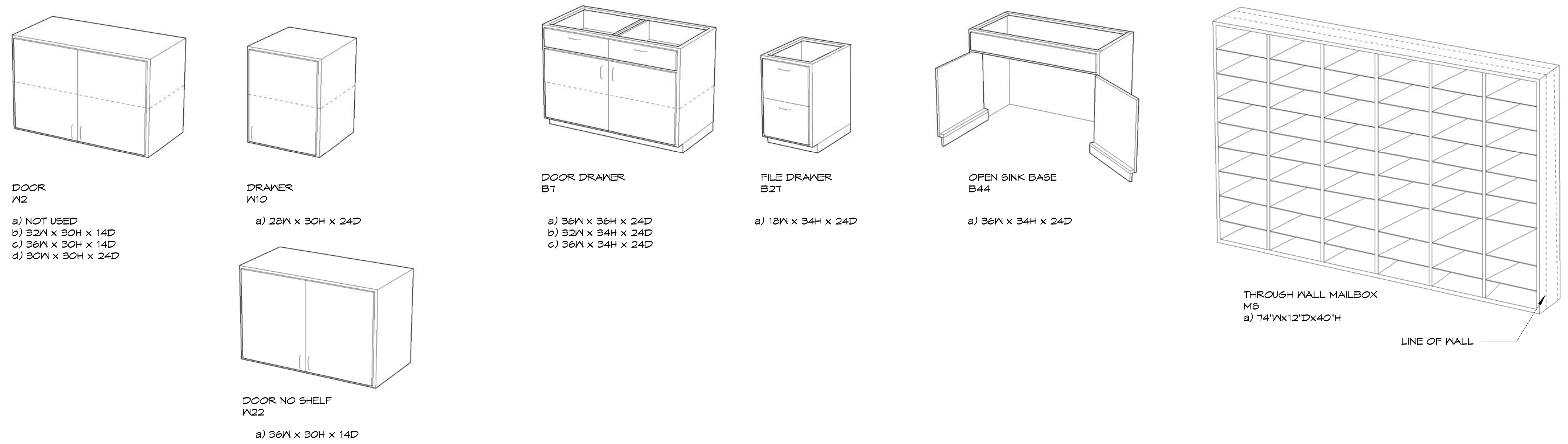

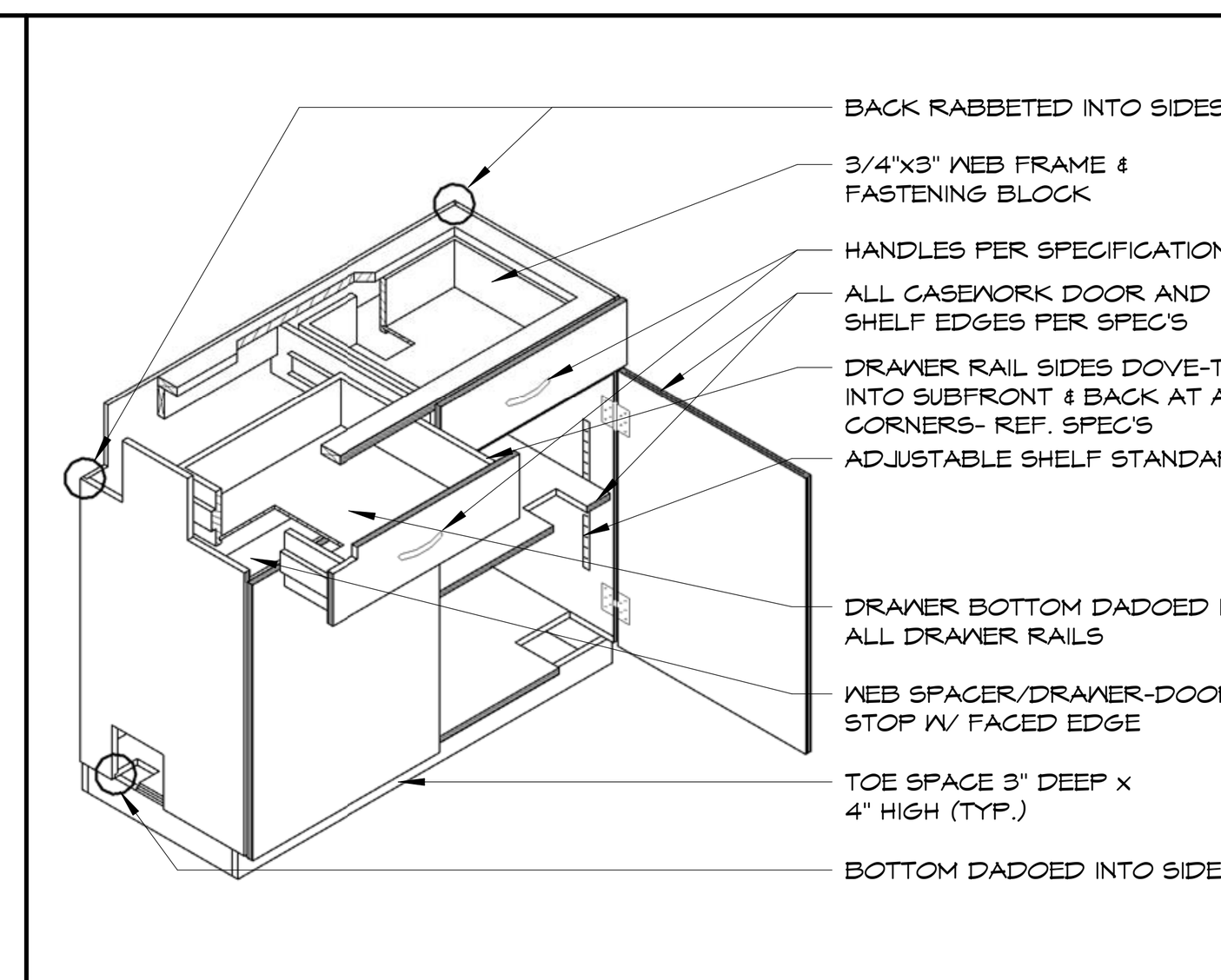

E TYP. BASE CABINET
3" = 1'-0"

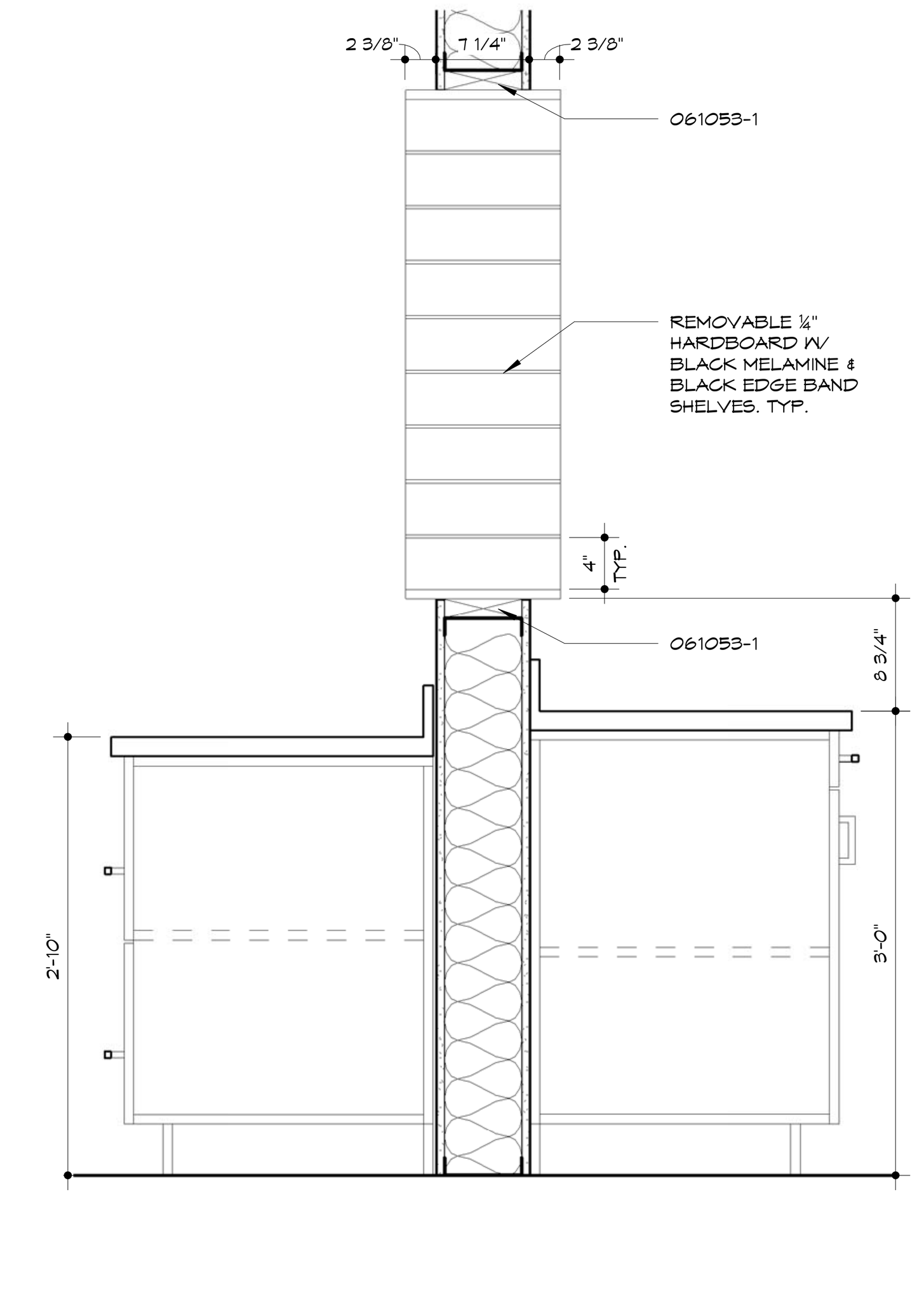

8 FILE 104/RECEPT 102 MAILBOXES
1" = 1'-0"

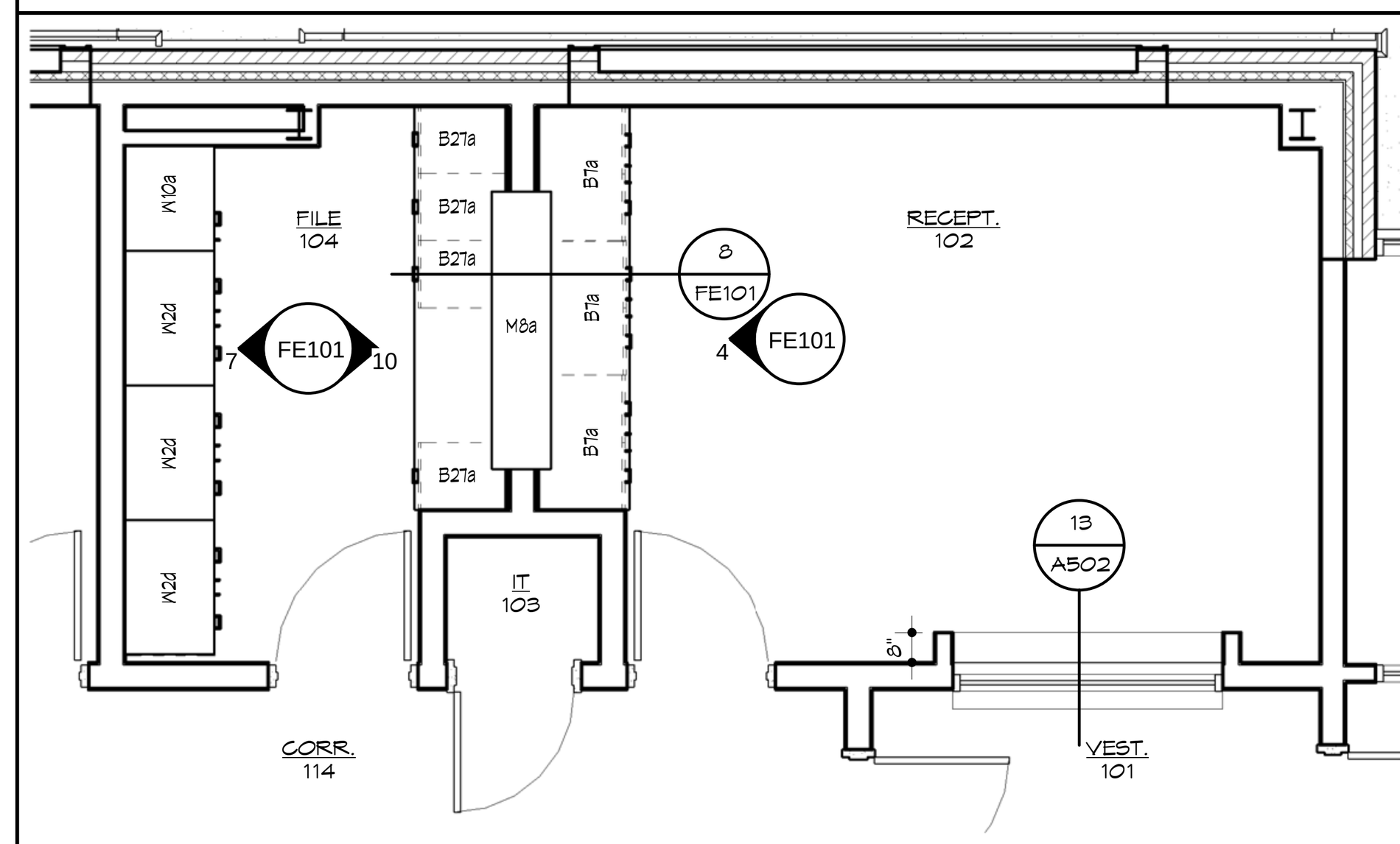

1 FILE 104 & RECEPT. 102
1/4" = 1'-0"

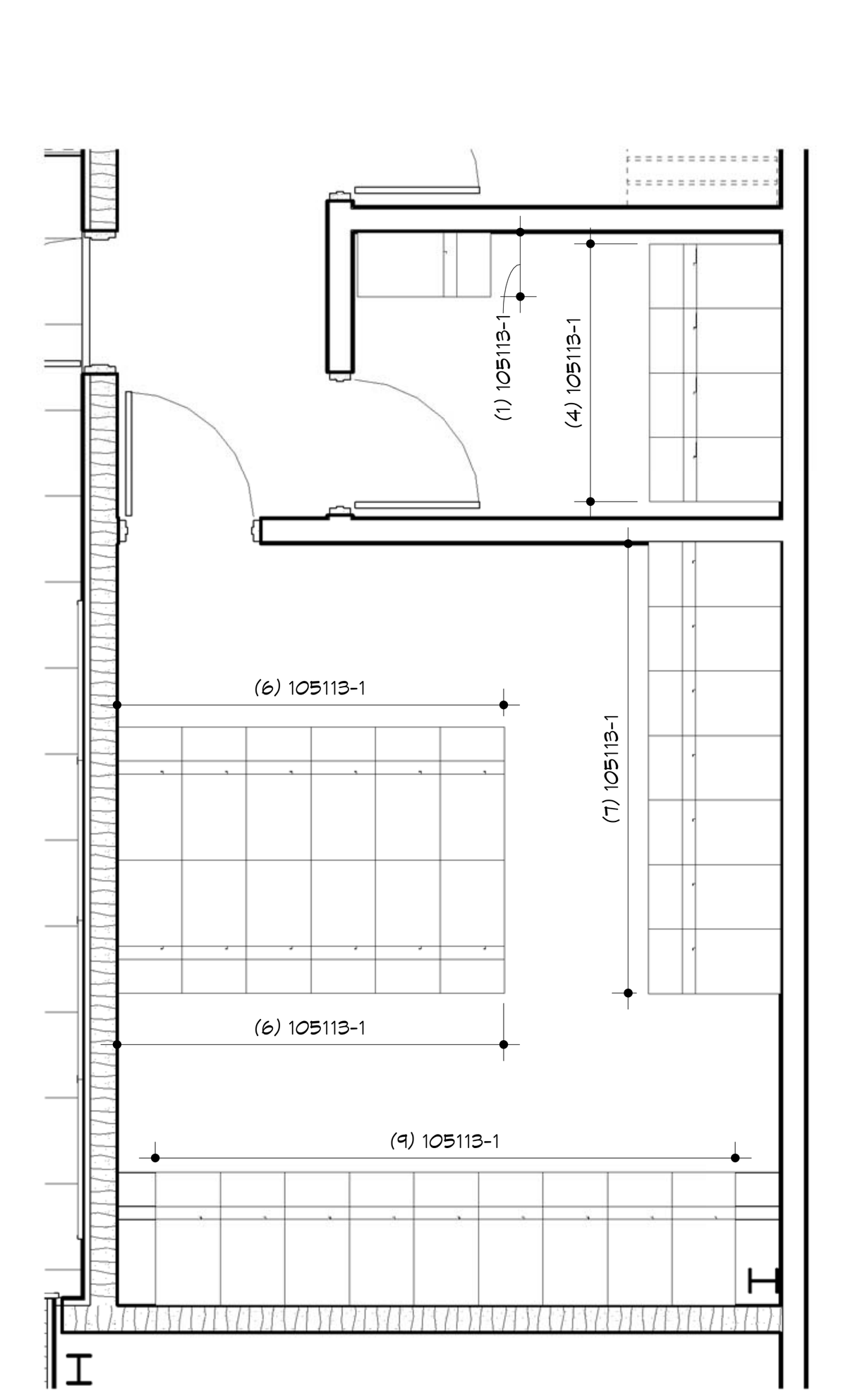

3 FIRST FLOOR LOCKER ROOMS
1/4" = 1'-0"

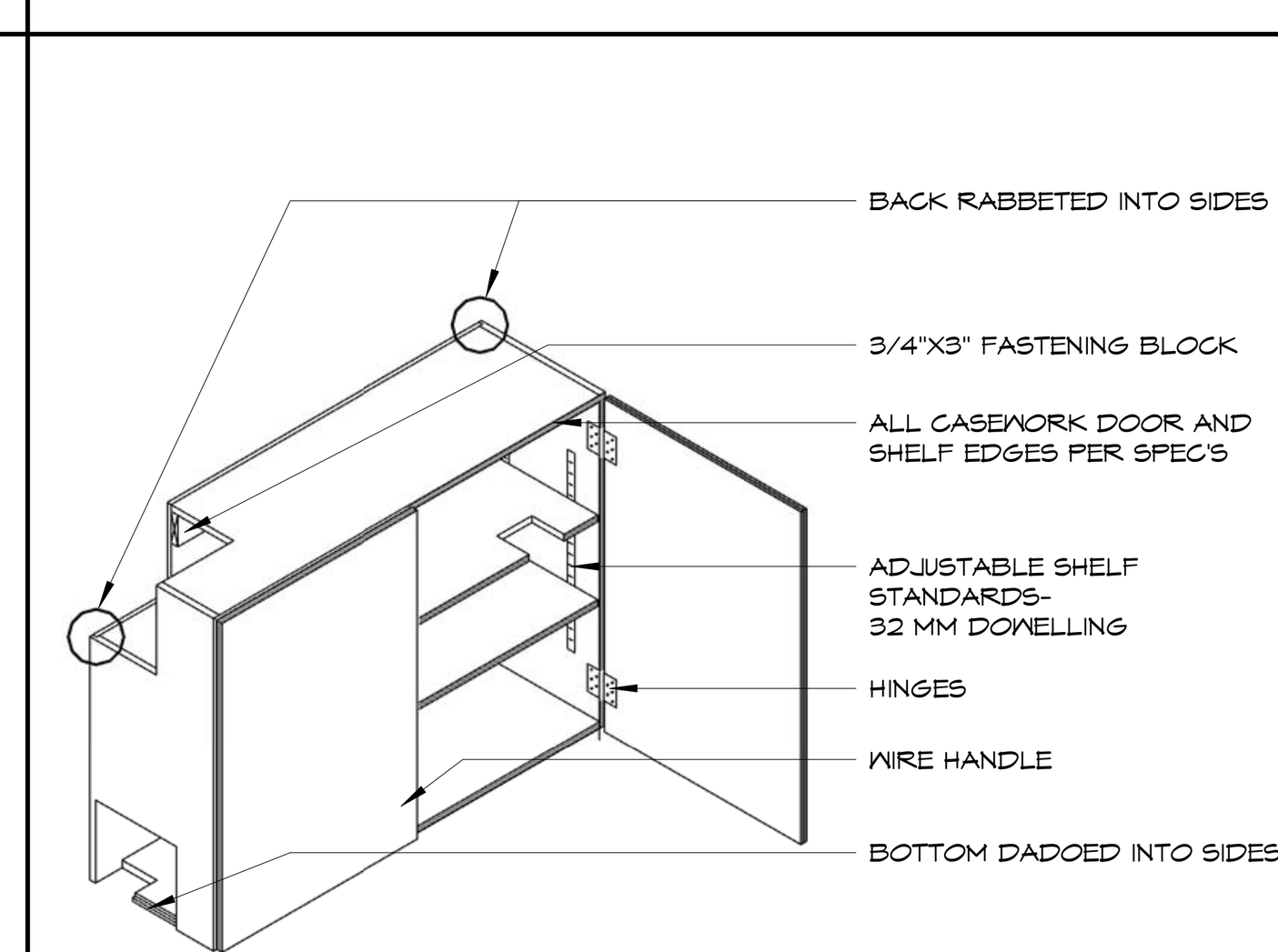

5 TYP. WALL CABINET
3" = 1'-0"

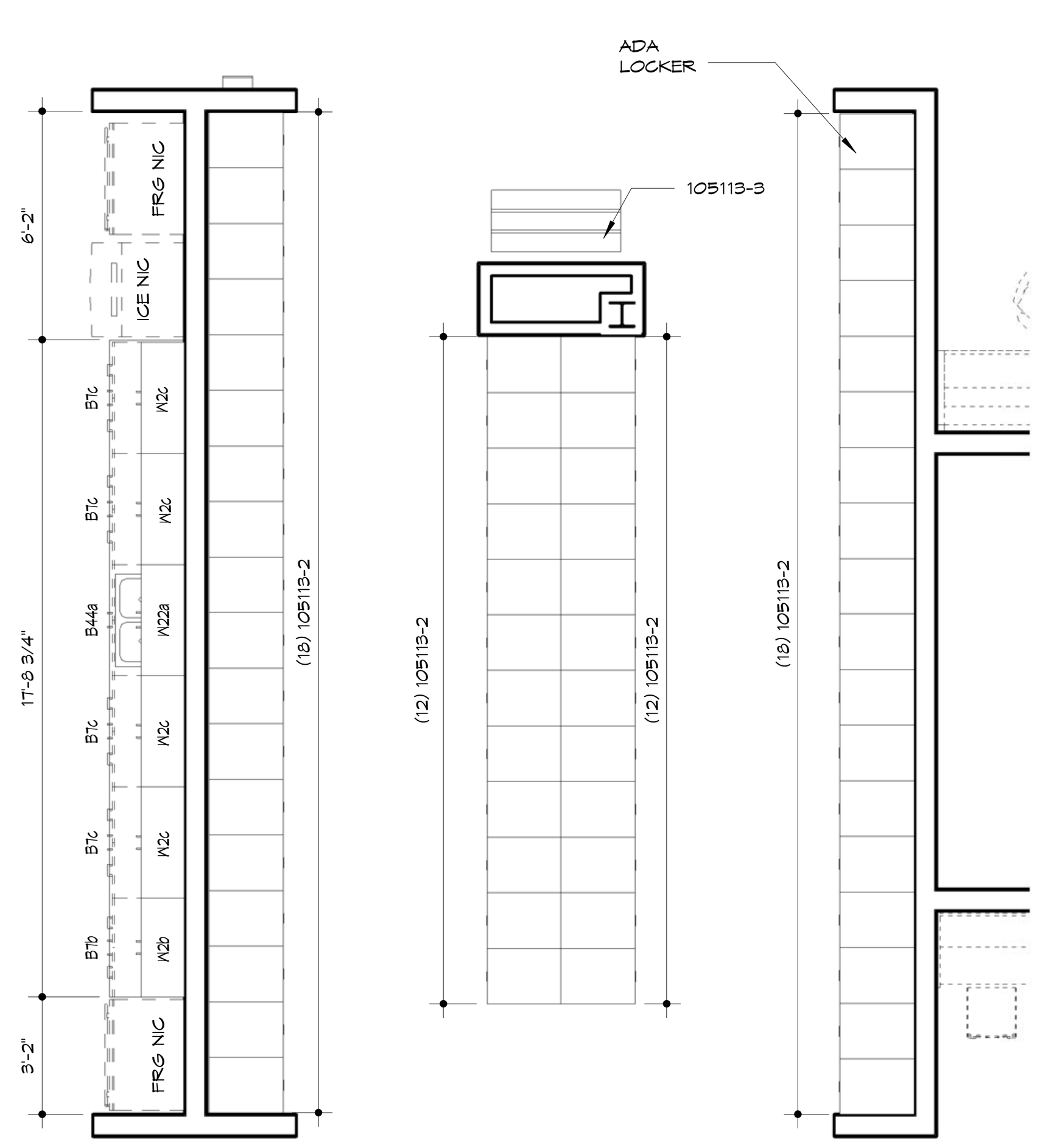

2 SECOND FLOOR KITCHEN AND LOCKERS
1/4" = 1'-0"

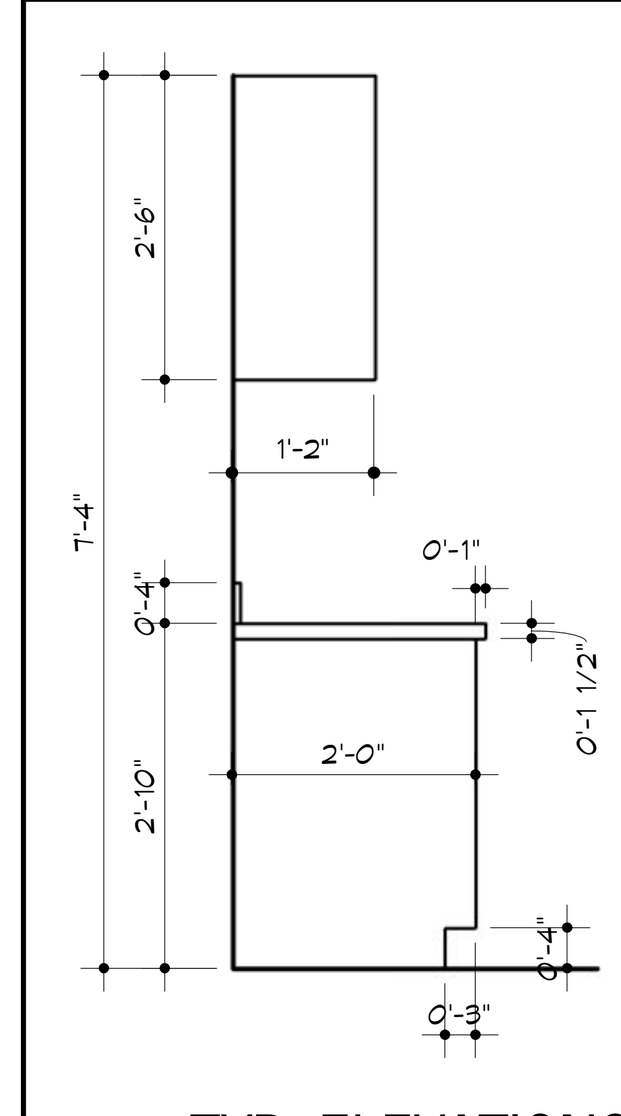

6 TYP. ELEVATIONS
1/2" = 1'-0"

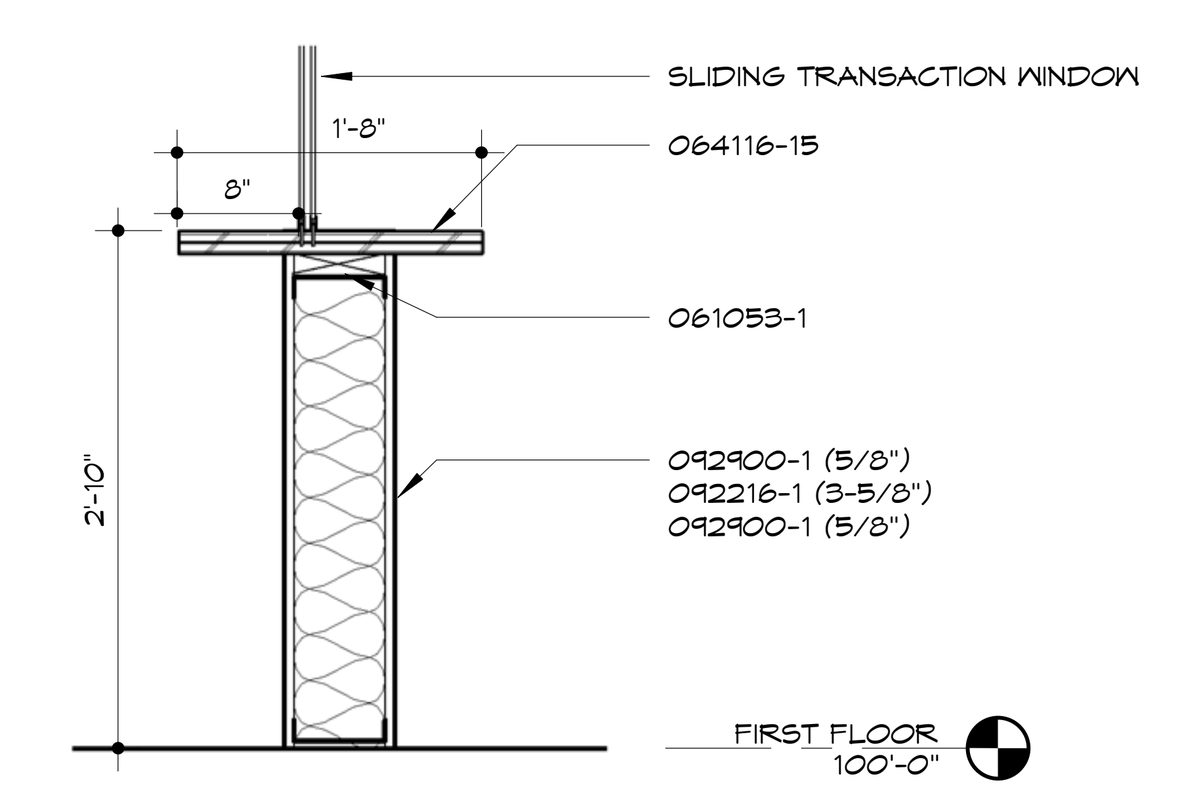

9 COUNTER AT SLIDING TRANSACTION WINDOW
3/4" = 1'-0"

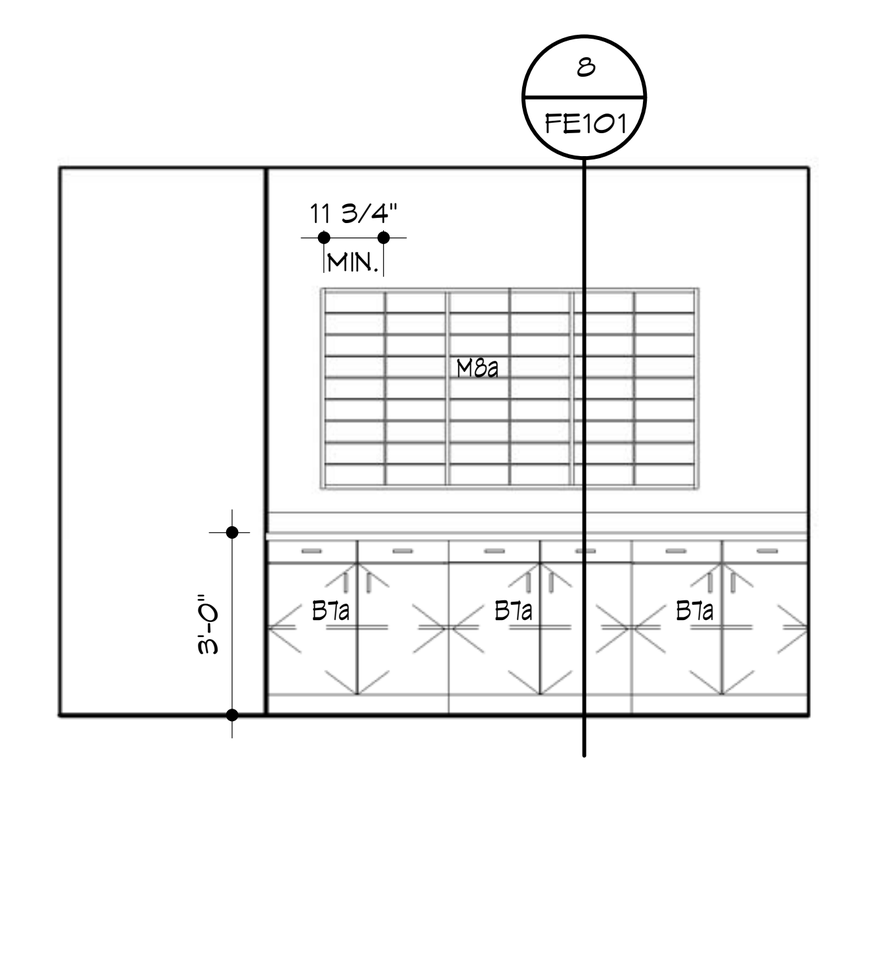

4 RECEPT. 102 WEST ELEVATION
1/4" = 1'-0"

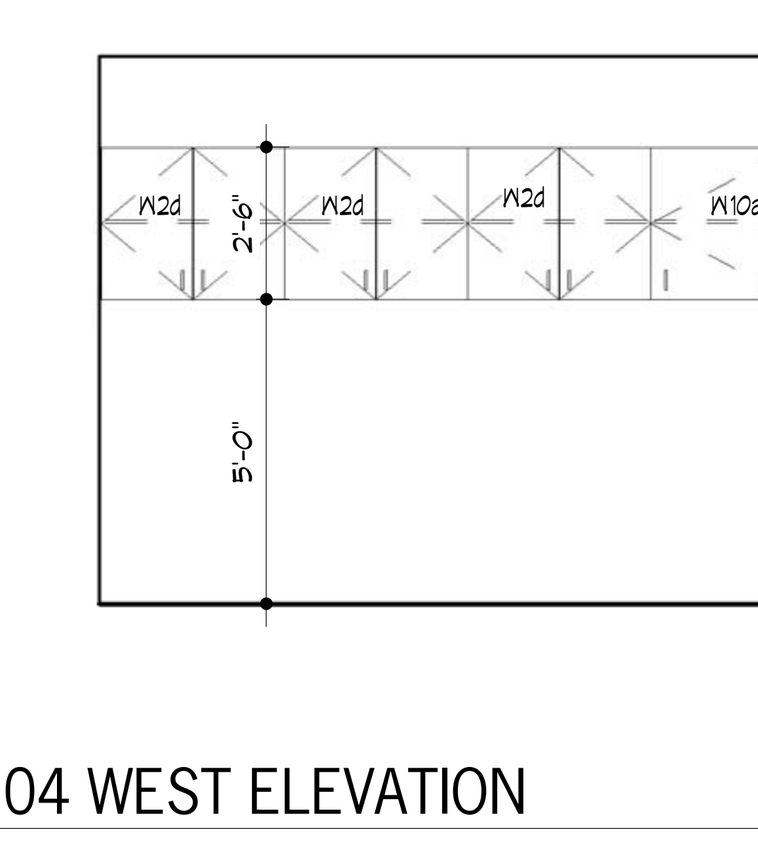

7 FILE 104 WEST ELEVATION
1/4" = 1'-0"

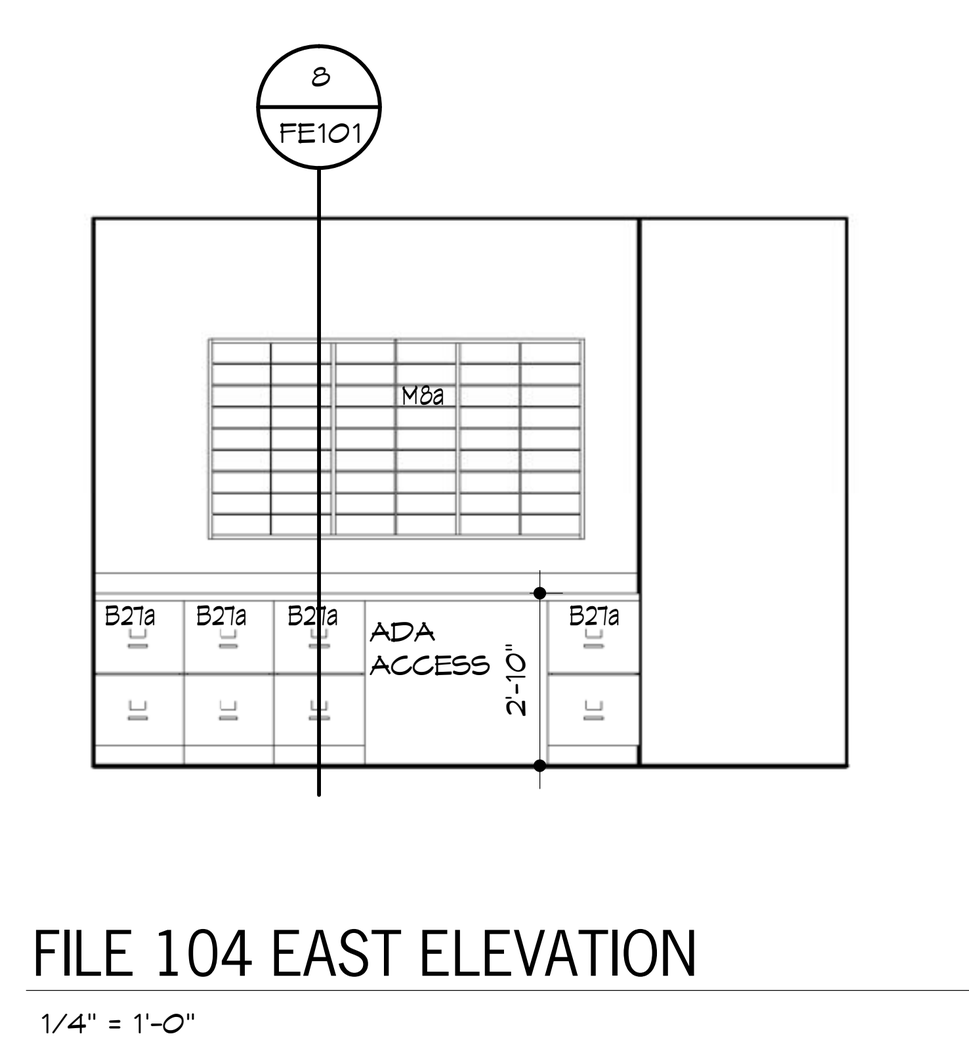

10 FILE 104 EAST ELEVATION
1/4" = 1'-0"

FIXED EQUIPMENT GENERAL NOTES

A. ALL SCHEDULED HEIGHTS ARE FROM FLOOR TO TOP OF CASEWORK UNIT (U.N.O.). HEIGHT OF CASEWORK WILL BE MEASURED TO TOP OF FINISHED COUNTERTOP.
B. FILLER PANELS SHALL BE OF SAME MATERIAL, MATERIAL THICKNESS & FINISH MATERIAL AS CABINET - COLOR TO MATCH BODY.
C. REFERENCE SPECIFICATIONS & DETAILS FOR TYP. CASEWORK CONSTRUCTION.
D. FIELD VERIFY ALL LOCATIONS & ADJUST UNIT DIMENSIONS AS REQUIRED TO FIT.
E. MECHANICAL, PLUMBING & ELECTRICAL FIXTURES & FITTINGS BY MECHANICAL/ ELECTRICAL CONTRACTOR U.N.O.
F. REFERENCE MECHANICAL/ ELECTRICAL DRAWINGS FOR COORDINATION WITH ELECTRICAL OUTLETS, PLUMBING & MECHANICAL.
G. PROVIDE PLASTIC LAMINATE ON SURFACES OF CASEWORK EXPOSED TO VIEW.
H. PROVIDE CONTINUOUS COUNTERTOP & 4" HIGH BLACK SPLASH AND/ OR SIDESPLASHWHERE ABUTS VERTICAL WALL SURFACE; ALL B ITEMS.
I. PROVIDE LOCKS ON ALL CABINET DOORS/ DRAWERS. ALL CASEWORK LOCKS WITH IN A ROOM KEYED ALIKE, EACH ROOM KEYED DIFFERENT. PROVIDE THREE (3) MASTER KEYS. PROVIDE THREE DIFFERENT LOCKS IN MAIN OFFICE.
J. WHERE TALL CASEWORK OCCURS ADJ. TO BASE CABINETS, SET TALL CABINETS OUT PAST COUNTERTOP SO THAT TALL CABINET DOORS OPEN 180 DEGREE & INSTALL FILLER PANELS @ TOP & EXPOSED EDGES.
K. PROVIDE FILLER PANEL @ TOP OF CABINET @ ALL LOCATIONS WHERE (2) WALL OR TALL CABINETS MEET @ INNER CORNER. PROVIDE A CONTINUOUS BRACING @ THE WALL TOALLOW FOR STORAGE OF ITEMS ABOVE THE FILLER.
L. MOUNT TOPS OF ALL WALL CABINETS AT 84" A.F.F., U.N.O.
M. TYP. TOEKICK 4" HIGH UNLESS OTHERWISE NOTED.
N. PROVIDE P.LAM COUNTERTOP WITH APPROPRIATE SUPPORT FOR LENGTH OF COUNTER, USE IN CONJUNCTION WITH WALL CLEATS & MTL. COUNTERTOP SUPPORTS.
O. PROVIDE COUNTERTOP ON ALL WALL CABINETS MOUNTED AT 60" A.F.F. OR LOWER

KEYNOTES

Note: Keynotes are drawn from a master list & may not be sequentially numbered. Sizes (Ex: 2x4) or other info. following keynote on drawings indicates criteria for those materials/locations which may differ from std. material specified.

033000 -1 Concrete Structure
-2 Concrete Floor Slab
-3 Vapor Barrier
-4 Welded Wire Fabric
-5 Steel Reinforcing Bar
-6 Rustication Joint
-7 Waterstop
-8 Dovetail Anchor
-9 Sidewalk
-10 Premolded Joint Filler
035300 -1 Concrete Topping
042000 -1 Face Brick
-2 Concrete Masonry Unit - Normal Weight (")
-3 Concrete Masonry Unit - Lightweight (")
-4 Wire Reinforcing
-5 Metal Tie/Anchor
-6 Through Wall Flashing
-7 Control Joint Strip
-8 Bond Beam (")
-9 Compressible Filler
-10 Weep Hole
-11 Cavity Drainage Material
-12 Termination Bar
044300 -1 Stone Masonry
-2 Anchor
-3 Stone Jamb
-4 Stone Sill
-5 Belt Course
047200 -1 Cast Stone
051200 -1 Steel Beams
-2 Steel Column
-3 Steel Tube
-4 Steel Channel
052100 -1 Steel Joist
-2 Joist - Extended End
-3 Joist - Ceiling Extension
053100 -1 Metal Decking
-3 Steel Composite Decking
-2 Flexible Closure Strips
054000 -1 Structural Steel Studs
-2 Structural Steel Joists
-3 "C" Closure
055000 -1 Steel Angle
-4 Steel Channel
-5 Steel Lintel
-6 Steel Pipe
-7 Steel Tube
-8 Steel Plate
-9 Steel Ladder
-10 Steel Bollard
055100 -1 Steel Stairs
-2 Steel Stair Stringer
-3 Steel Embed Plate
055213 -1 Steel Pipe Handrail
-2 Steel Pipe Rail/Post
-3 Steel Handrail Wall Bracket
-4 Steel Rod
055300 -1 Steel Grating
-2 Steel Frame
057300 -1 Decorative Metal Railings
057500 -1 Ornamental Metal Stamped Grille
061053 -1 2x Wood Nailer (")
-2 2x Wood Blocking (")
-3 1x Wood Continuous (")
-4 Plywood (")
-5 #30 Felt
-6 #15 Felt
-7 Sheathing (")
064116 -1 Interior Architectural Woodwork
-2 High Pressure Laminate
-3 Cabinet Liner Laminate
-4 Particle Board
-5 Plywood
-6 3mm Edge Molding
-7 Solid Wood Blocking
-8 Hardwood
-9 Steel Tube/Leg Frame
-10 Door Hinge
-11 Door/Drawer Pull
-12 Magnetic Catch
-13 Drawer
-14 Shelf Supports
-15 Countertop
-16 Solid-Surfacing Material
071113 -1 Bituminous Dampproofing
071326 -1 Self-Adhering Sheet Waterproofing
072100 -1 Foundation Wall or Under Slab Insulation (R-)
-2 Cavity Wall Insulation (R-)
-3 Building Insulation - Unfaced (R-)
-4 Building Insulation - Faced (R-)
-5 Sill Sealer
-6 Safing Insulation
072726 -1 Fluid Applied Membrane Air Barrier
-2 Flashing Tape
074213 -1 Metal Wall Panel (Type 1)
-2 Trim
-3 Z-Furring (")
-4 Metal Wall Panel (Type 2)
-5 Metal Soffit Panel
075423 -1 Thermoplastic Polyolefin (TPO) Roofing
-2 Roof Insulation Flat
-3 Roof Insulation Tapered
-4 Roof Expansion Joint
-5 Coverboard
-6 Walkway Protection Board
076200 -1 Sheet Metal Flashing and Counterflashing
-2 Pre-finished Roof Edge
-3 Pre-finished Coping
-4 Sheet Metal Reglet
-5 Sheet Metal Gutter
-6 Sheet Metal Downspout
-7 Sheet Metal Scupper
077129 -1 Roof Expansion Joint
077200 -1 Roof Hatch/Ladder
078413 -1 Penetration Firestopping
078443 -1 Joint Firestopping
079200 -1 Sealant - Rake where required
-2 Joint Filler
-3 Gasket
-4 Backer Rod
079500 -1 Expansion Control
081113 -1 Steel Door
-2 Steel Frame
-3 Frame Anchor
-4 Louver
-5 Plaster Guard
-6 FPR Door
081416 -1 Flush Wood Door
083113 -1 Access Door
-2 Access Door Frame
-3 Floor Access Door
083323 -1 Overhead Coiling Door
-2 Coiling Counter Door
083613 -1 Sectional Overhead Door
-2 Sectional Overhead Door Track
-3 Weatherstripping
084113 -1 Aluminum Entrance Door
-2 Aluminum Entrance Frame
-3 Sunshade
-4 Aluminum Subsill
084413 -1 Glazed Aluminum Curtain Wall
-2 Threshold
-3 Sunshade Louver
-4 Aluminum Subsill
087100 -1 Track Hardware
088000 -1 Glazing (as scheduled)
088853 -1 Securtiy Glazing (as scheduled)
089119 -1 Louvers and Vents
092216 -1 Steel Stud (")
-2 Steel Stud Runner (")
-3 Furring Channel (")
092400 -1 Portland Cement Plastering
-2 Metal Lath
-3 Casing Bead
092900 -1 Gypsum Board (")
-2 Fire Rated Gypsum Board (")
-3 Cementitious Tile Backer Panel
-4 Metal Suspension System
-5 Acoustical Sealant
-6 Acoustical Insulation (")
-7 Metal Edge Trim
-8 Auxiliary Support Framing
-9 Metal Control Joint
-10 High Impact Gypsum Board
-11 Concrete Interior Finishing Compound
-12 Stiffener
093000 -1 Porcelain Wall Tile (" x ")
-2 Shower Pan
-3 Shower Pan Flashing
-4 Porcelain Floor Tile (" x ")
-5 Tile Base
-6 Tile Cap
-7 Setting Bed
-8 Uncoupling water-proof membrane
-9 Shower Splashguard
-10 Shower Niche
095113 -1 Acoustical Panel ('x ') (F = Fire Rated)
-2 Ceiling Suspension System
-3 Edge Mold Trim
-4 Auxiliary Support Framing
096513 -1 Resilient Tile Flooring
-2 Resilient Wall Base
-3 Edge Strip
-4 Tactile Warning Surface
-5 Resilient Stair Tread
-6 Resilient Stair Riser
-7 Resilient Stringer Skirt
-8 Resilient Stair Nose
096813 -1 Carpet Tile
096900 -1 Access Flooring
099113 -1 Exterior Painting
099123 -1 Interior Painting
099635 -1 Secondary Containment Coating System
101400 -1 Signage
102113 -1 Toilet Partition
-2 Urinal Screen
102213 -1 Wire Mesh Partitions
102600 -1 Impact-Resistant Cornerguard
102800 -1 Tissue Dispenser
-2 Framed Mirror
-3 Sanitary Napkin Disposer
-4 Grab Bar
-5 Shower Seat
-6 Shower Curtain Rod
-7 Coat/Robe Hook
-8 Shower Curtain
104413 -1 Fire Extinguisher Cabinet
104416 -1 Fire Extinguisher
105113 -1 Personnel Locker
-2 Locker
-3 Bench
105300 -1 Pre- Manufactured Canopies
107500 -1 Flagpole
108113 -1 Deterrent Spikes
122413 -1 Roller Window Shades
133600 -1 Spray Painting Booth
142400 -1 Hydraulic Elevator
311000 -1 Site Clearing
312000 -1 Earth Moving
-2 Interior Fill
-3 Exterior Fill
-4 Granular Drainage Course
-5 Subbase Course
321313 -1 Concrete Paving
334600 -1 Perforated Wall Pipe & Fittings
-2 Geotextile Filter Fabric (Flat/Sock)
-3 Drainage Panel

H T K
ARCHITECTS PA
900 S. KANSAS AVE., SUITE 200
TOPEKA KANSAS 66612
P 785.266.5373
9300 W 110TH ST. STE. 150
OVERLAND PARK, KANSAS 66210
P 913.663.5373
www.htkarchitects.com

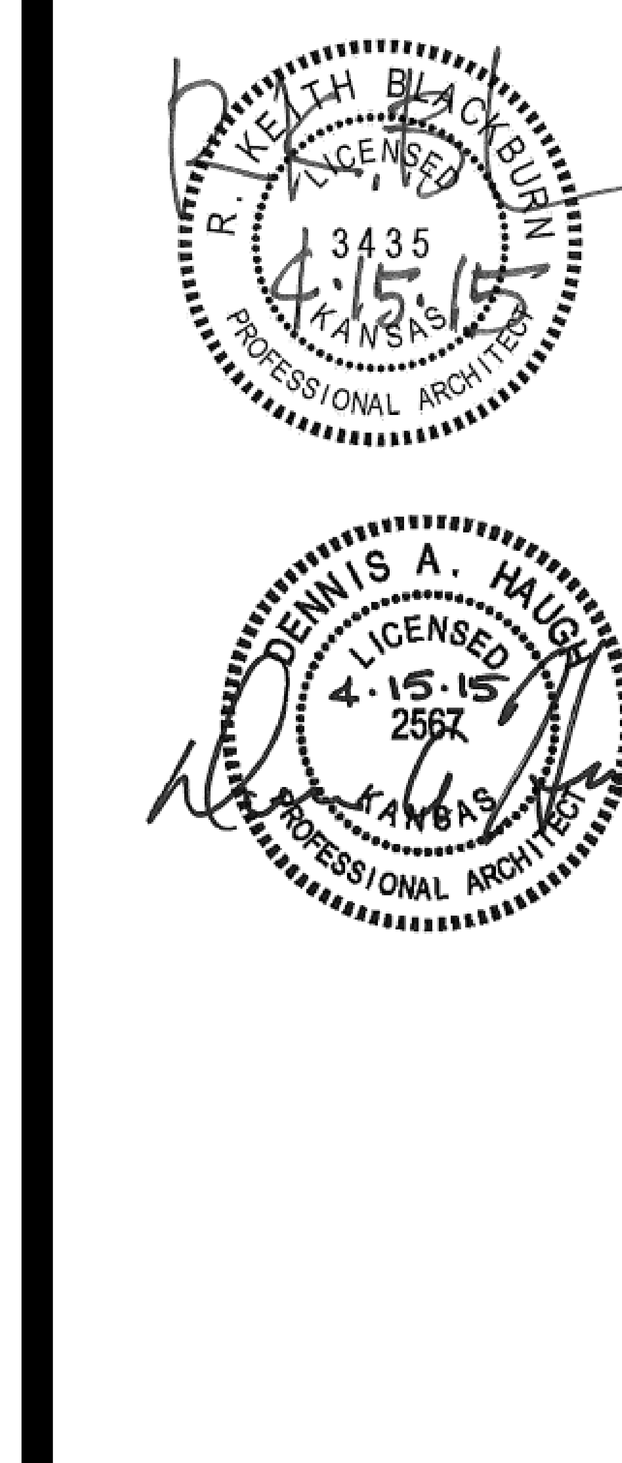

DATE:
- 4-15-15

REVISED DATE:
- 12-18-14
- 2-9-15
- 3-10-15
-

HTK PROJECT NUMBER:
- 1410.03

Department of Administration
Office of Facilities and Procurement Management
800 SW Jackson, Suite 700
Topeka, Kansas 66612-1216
Phone 785-296-8899
FAX 785-296-3456

STATE OF KANSAS
STATE OF KANSAS ENERGY & SERVICE CENTER
221 SW 7th Street
BUILDING NUMBER 17300-0038

DATE: 4-15-15 DRAWN BY: Author CHECKED BY: Checker REV:

FIXED EQUIPMENT PLANS

A-012651

FE101

CONSTRUCTION DOCUMENTS

4/16/2015 11:12:58 AM C:\Users\jms\Documents\REVIT\State of Kansas Energy_Central_jms.rvt

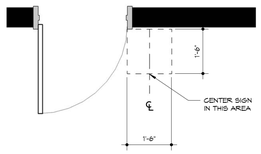

1 SIGN LOCATION DETAIL
1/2" = 1'-0"

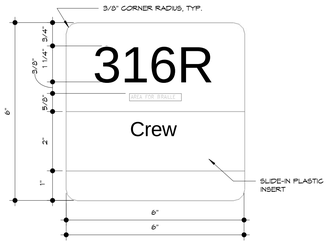

2 OFFICE SIGN WITH SLIDE
6" = 1'-0"

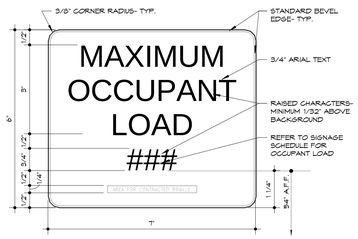

3 SIGN - OCCUPANCY
6" = 1'-0"

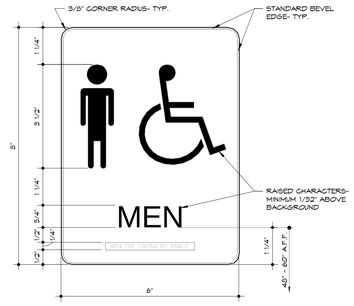

4 SIGN - TOILET - MEN
6" = 1'-0"

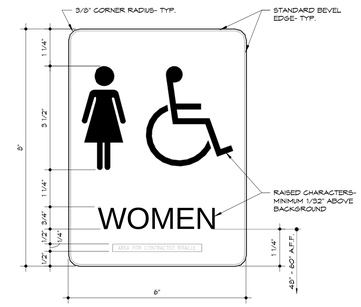

5 SIGN - TOILET - WOMEN
6" = 1'-0"

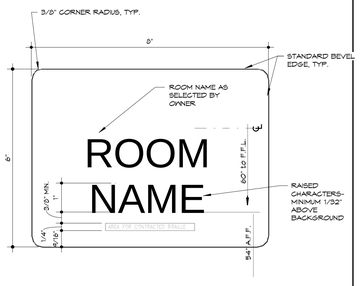

6 ROOM SIGN
6" = 1'-0"



7 STAIR SIGN
6" = 1'-0"



8 UNISEX TOILET
6" = 1'-0"

PANEL SIGN SCHEDULE

ARCH. PLAN NUMBER/ SIGN PLAN MARK/ ROOM NUMBER-TEXT	ROOM NAME-TEXT	ARCH. PLAN NAME	SIGN TYPE	QTY.
100		VEST.	9	1
101	CAPITAL POLICE	VEST.	6	1
102		RECEPT.	-	-
103		IT	6	1
104		FILE	6	1
105		CONF.	6	1
106		PIO.	2	1
107		LT.	2	1
108		LT.	2	1
109		CPT.	2	1
110.1		WEAPONS/AMMO	6	1
110.2		SUPPLY	6	1
111		LT.	2	1
112		CORR.	-	-
113		OPEN OFF.	6	2
114		CORR.	-	-
115		DUI.	2	1
116		SUP.	6	1
117		CENTRAL MONITORING/DISPATCH	2	6
118		CORR.	-	-
119		M LOCKER	6	1
120		W LOCKER	6	1
121		T.	7	1
122		CORR.	-	-
123		MECH	6	2
124		BLDG. STOR.	6	2
125		BST	6	2
126		ELEC.	6	2
127		CHILLER ROOM	6	1
128		BOILER	6	1
129		VEST.	-	-
130		STAIR	8	2
131		RECEIVING	2	2
132		OFF.	3	1
133		PARTS	6	2
134		HVAC SHOP	-	-
135		ELEC. SHOP	6	2
136		BOILER SHOP	6	2
137		STAIR	8	2
138		W	5	1
139		PLUMBING SHOP	-	-
140		M	4	-
141		CARPENTRY SHOP	-	-
142		STAIR	8	2
143		ELEV. EQUIP.	6	1
144	LOCK SHOP	WAIT.	6	1
145		LOCK SHOP	2	1
146		CORR.	8	1
200		EVIDENCE OFF.	2	1
201		EVID. STOR.	6	1
202		CORR.	-	-
203		SERVICE SHOP	6	1
204		UNIFORM STOR.	6	1
205		CORR.	-	-
206		OFF.	2	1
207		OFF.	2	1
208		OFF.	2	1
209		IT	6	1
210		CONF.	6	1
211		CREW	2,3	2,2
212		CORR.	-	-
213		LOCKERS	-	-
214		CORR.	-	-
215		SIGN	6	1
216		ELEV.	7	1
217		M	4	1
218		W	5	1
219		IT RM.	6	1
221		MEZZANINE	-	-
222		JAN / TRASH.	6	1
223		SERVICE SHOP	6	2
224		WAREHOUSE	1	1
EXT		Exterior	-	-
S100		OFF.	2	1
S101		CORR.	2	1
S102		CORR.	2	1
S103		SW MAIN SHOP	6	1

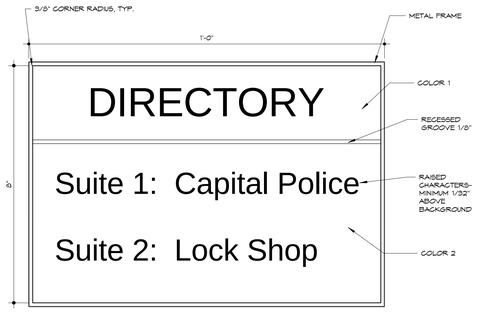

9 DIRECTORY
6" = 1'-0"

SIGN SCHEDULE GENERAL NOTES

1) THE TEXT-NUMBER AND TEXT-NAME ARE THE CHARACTERS TO BE PRINTED ON THE SIGN AS INDICATED BY THE SIGN TYPE.

2) ALL SIGNS ADJACENT TO DOORS OR OPENINGS TO BE LOCATED ACCORDING TO DETAIL 1/FE301

3) REFER TO FIXED EQUIPMENT PLANS FOR SIGN LOCATION PLAN MARKS UNLESS OTHERWISE NOTED. SIGN PLAN MARKS ARE INDICATED AS:

4) PROVIDE ONE AT EACH DOOR INTO ALL ROOMS WITHIN THE FACILITY NOT OTHERWISE SCHEDULED TO RECEIVE OTHER ROOM SIGNAGE. ROOMS WITH MULTIPLE DOORS WILL REQUIRE ONE SIGN AT EACH DOOR. NOTE THAT THIS INCLUDES ALL CLOSETS NOT OTHERWISE LISTED AS A ROOM.

HTK ARCHITECTS PA
9300 W 110TH ST. STE. 150
OVERLAND PARK, KANSAS 66210
P 913.663.3373
900 S. KANSAS AVE., SUITE 200
TOPEKA KANSAS 66612
P 785.266.3373
www.htkarchitects.com

DATE:
- 4-15-15

REVISED DATE:
- 12-18-14
- 2-9-15
- 3-10-15

HTK PROJECT NUMBER:
- 1410.03

Department of Administration
Office of Facilities and
Procurement Management
800 SW Jackson, Suite 700
Topeka, Kansas 66612-1216
Phone: 785-296-8899
FAX: 785-296-3456

STATE OF KANSAS
STATE OF KANSAS ENERGY & SERVICE CENTER
221 SW 7th Street
BUILDING NUMBER 17300-0038

DRAWN BY: Author CHECKED BY: Checker REV:
DATE: 4-15-15

SIGNAGE

A-012651

FE201

CONSTRUCTION DOCUMENTS

4/16/2015 11:13:03 AM C:\Users\jms\Documents\REVIT\State of Kansas Energy_Central_jms.rvt

GENERAL NOTES - STRUCTURAL

1. The contractor shall verify dimensions and conditions before construction and notify the engineer of any discrepancies, inconsistencies, or difficulties affecting the work before proceeding.

2. The contractor shall coordinate all disciplines, verifying size and location of all openings, whether shown on structural drawings or not, as called for on architectural, mechanical, or electrical drawings. All conflicts, inconsistencies, or other difficulties affecting structural work shall be called to the architect or engineer's attention for direction before proceeding.

3. All design and construction work for this project shall conform to the requirements of the 2012 International Building Code, as amended by the City of Topeka, Kansas.

4. These drawings are for this specific project and no other use is authorized.

5. Structural Design Load Criteria:

A. Roof = 20 psf Live Load.
B. Floor: Office= 60 psf Live + 15psf partition
Corridor= 80 psf Live
Public Spaces/Stairs= 100 psf Live
Floor Collateral Dead Load= 10psf
C. Snow Pg = 20 psf, Is = 1.0
D. Lateral Loads:
1.) Wind V =120 mph
Exposure C, Fully Exposed
Occupancy (Risk) Category III; GCpi=+/-0.18.
Design wind pressures to be used for the design of exterior component & cladding materals on the designated zones of wall and roof surfaces shall be per section 30,7 & Table 30.7-2 of ASCE/SEI 7-05.
Tabulated pressures shall be multiplied by effective area reduction factors, exposure adjustment factors, and topographic factors where applicable.
2.) Seismic= Ss = 0.155, S1 = 0.054. IE = 1.0
Occupancy (Risk) Category III; Site Classification D
Sds=0.165, Sd1=0.086, Ie=1.25
Seismic Design Category B
Basic Seismic Force-Resisting System:
Steel Systems Not Specifically Detailed for Seismic Resistance
Equivalent Lateral Force Procedure
(R=3.0, V=0.103W; Omega=3.0; Cd=3.0)
E. This project is designed to resist the most critical effects resulting from the load combinations of section 1605.3 of the 2012 International Building Code.

6. Concrete:

A. All concrete except exterior flat work shall develop minimum ultimate compressive design strength of 3500 psi in 28 days, but not less than 500 pounds of cement shall be used per cubic yard of concrete regardless of strengths obtained, not over 6 gallons of water per 100 pounds of cement and not over 4 inches of slump.
B. All concrete for interior flat work shall develop minimum ultimate compressive design strength of 4000 psi in 28 days, but not less than 560 pounds of cement shall be used per cubic yard of concrete regardless of strengths obtained, not over 5.0 gallons of water per 100 pounds of cement and not over 4 inches of slump.
C. Concrete for exterior flatwork shall have a minimum design compressive strength of 4500 psi in 28 days, with not less than 560 pounds of cement per cubic yard of concrete, not over 5 gallons of water per 100 pounds of cement, with 6% +/- 1% air entrainment, and a maximum of 4 inches of slump.
D. The preceding minimum mix requirements may have water-reducing admixtures conforming to ASTM C494 added to the mix at manufacturer's dosage rates for improved workability.
E. The preceding minimum mix requirements may have up to 15% maximum of the cement content replaced with an approved ASTM C618 Class C fly ash, provided the total minimum cementitious content is not reduced.
F. Aggregate for all concrete shall be well graded from coarsest to finest with no more than 18 percent and not less than 8 percent retained on an individual sieve, except that less than 8 percent may be retained on coarsest sieve and on No. 50 and finer sieves.
G. All interior concrete slabs on grade shall be placed over 15 mil, Class A Vapor Barrier per ASTM E1745 with less than 0.01 perms, tested after mandatory conditioning. All joints shall be lapped and sealed per manufacturer's recommendations. All penetrations, as well as damaged vapor barrier material shall also be sealed per manufacturer's recommendation prior to concrete placement. The vapor barrier shall be placed over free-draining granular material as prescribed by the project soils report.
H. All concrete is reinforced concrete unless specifically called out as unreinforced. Reinforce all concrete not otherwise shown with same steel as in similar sections or areas. Any details not shown shall be detailed per ACI 315 and meet requirements of ACI 318, current editions.
I. Control joints in dirt formed slab to be as shown on plans. Where not shown, limit controlled areas to not more than 150 square feet, or 12 feet on any side.
J. Contractor shall verify that all concrete inserts, reinforcing and embedded items are correctly located and rigidly secured prior to concrete placement.
K. Construction joints in beams, slabs, and grade beams shall occur at midspan (middle third) unless noted otherwise. Provide 2 x 4 horizontal keys at construction joints for shear transfer.
L. No aluminum items shall be embedded in any concrete.

7. Reinforcing Steel:

A. All reinforcing steel shall conform to the requirements of ASTM A615 or A706 grade 60 steel. Welded plain wire fabric shall be supplied in sheets and conform to the requirements of ASTM A185.
B. Clear minimum coverage of concrete over reinforcing steel shall be as follows:

Concrete placed against earth	3"
Formed concrete against earth	2"
Slabs	1"
Beams or Columns	1-1/2"
Other	2"

All coverage shall be nominal bar diameter minimum.
C. All dowels shall be the same size and spacing as adjoining main bars (splice lap 48 bar diameters or 24" minimum unless noted otherwise).
D. At corners of all walls, beams, and grade beams supply corner bars (minimum 2'-0" in each direction or 48 bar diameters) in outside face of wall, matching size and spacing of horizontal bars. Where there are no vertical bars in outside face of wall, supply 3 - #4 vertical support bars for corner bars.
E. Bars marked continuous and all vertical steel shall be lapped 48 bar diameters (2'-0" minimum) at splices and embedments, unless shown otherwise. Splice top bars near midspan and splice bottom bars over supports, unless noted otherwise.
F. At all holes in concrete walls and slabs, add 2 - #5 bars (opening dimension plus 96 diameters long) at each of four sides and add 2 - #5 x 5'-0" diagonally at each of four corners of hole. Openings in 8" thick walls are reinforced similar, but with 1 - #5 instead of 2 - #5, respectively.
G. Accessories shall be as specified in latest edition of the ACI Detailing Handbook and the concrete Reinforcing Steel Institute Design Handbook. Maximum accessory spacing shall be 4'-0" on center, and all accessories on exposed surfaces are to have plastic coated feet.
H. All slabs and stairs not shown otherwise shall be 6" thick with #4 bars at 12" on center each way. All exterior porches and stoops not otherwise detailed may be constructed in any standard manner, solid or hollow, but must be reinforced with #4 bars at 12" on center each way minimum. Porches shall be doweled to adjacent walls or grade beams with #4 bars at 12" on center, hooked or embedded 40 diameters into both members. Slope porches 1/8" per foot for drainage unless noted otherwise.
I. Allow 1 ton of reinforcing bars #4 or larger to be used as directed in the field for special conditions (labor for placing same to be included).

8. Structural Steel:

A. All structural steel beams and columns shall be ASTM A992, grade 50 steel and all miscellaneous steel shall be ASTM A36 grade steel. Hollow Structural Sections (HSS) shall be ASTM A500, grade B. Fabrication and erection shall be in accordance with AISC 303-05 "Code of Standard Practice for Steel Buildings and Bridges" in the 13th Edition of the AISC Steel Construction Manual.
B. All welding shall conform to the recommendations of the AWS.
C. All bolts not otherwise specified shall be 3/4" diameter high strength (ASTM A325-N). All bolts shall be fully pretensioned. All beam connections shall be designed per the AISC Manual of Steel Construction "Framed Beam Connections" for the indicated reactions or at least 0.4 x beam total shear capacity, Vn/Omega, shown in the maximum total uniform load tables, whichever is greater; and, shall account for eccentricity when the bolt line is more than 2" from the center of the support. All connections must be two bolt minimum. Connection design and shop drawing preparation shall be completed under the direct supervision of a professional engineer licensed in the state the project is located and shop drawings and connection calculations shall bear his seal.
D. All anchor bolts shall be 3/4" diameter, ASTM F1554, Grade 36 unless noted otherwise.
E. Design, fabrication and erection of all open-web bar joists shall comply with the recommendations of the Steel Joist Institute (SJI). Joists shall be designed to support loads given in the standard load tables of SJI Specs and Tables plus an additional point load of 200 lbs. on the top or bottom chord at any location without additional web reinforcing.
F. All K-series joists shall bear 2-1/2" minimum on structural steel beams and be welded to the beams with 1 1/2" of 1/8" fillet weld each side (minimum).
G. All K-series joists bearing on masonry walls shall have 6" x 3/8" x 6" bearing plates welded to bulbtees set in bond beams with 1 1/2" of 1/8" fillet weld each side (minimum). Bearing plates shall be located not more than 1/2" from the face of the wall on the bearing side. Joists shall bear 4" minimum on bearing plates and be welded to beams or bearing plates with 1 1/2" of 3/8" fillet weld each side (minimum).
H. All steel joists shall have horizontal bar or angle bridging per Steel Joist Institute Specifications. Provide rigid x-bridging in addition to and matching horizontal bridging where joists are discontinuous unless horizontal bridging is anchored to wall top and bottom. Joist sweep allowance shall comply with AISC Standard Practice.
I. Joists shall be designed for 25 psf net uplift resulting from wind loading as measured 10 ft from a building corner, 20 psf net uplift as measured from the building edge, and 15 psf otherwise.
J. All openings in steel joist roof to have 3 x 3 x 1/4" angle frame set between joists. Support mechanical equipment with 4 x 4 x 5/16" angles laid between joists framed to 4 x 4 x 5/16" angles (length equals mechanical unit dimension plus distance each end to next panel point) laid parallel to and welded to top and/or bottom cord of joists to distribute load to joist panel points.
K. All steel joists shall have a midspan camber approximately equal to that recommended by the Steel Joist Institute Specifications.
L. Design and installation of steel decking shall comply with the recommendations of the Steel Deck Institute (SDI). All decking shall be galvanized unless noted otherwise.
M. Allow 2 tons structural steel to be used as directed in field for special conditions by the engineer of record. Cost for shop drawings, fabrication, delivery, detailing, and erection to be included. 50% of structural steel allowance shall be bid as miscellaneous galvanized angle and plate.

9. Post-Installed Anchors:

A. Post-installed anchors shall be used only where specified on the drawings unless approved in writing by the engineer of record. See drawings for anchor diameter, spacing and embedment. Performance values of the anchors shall be obtained for specified products using appropriate design procedures and/or standards as required by the governing building code. Anchors installed in concrete shall have an ICC-ES Evaluation Service Report. Special inspection is required for all post-installed anchors.
B. Mechanical anchors used in cracked and uncracked concrete shall have been tested and qualified for use in accordance with ACI 355.2 and ICC-ES AC193. All anchors shall be installed per the anchor manufacturer's written instructions.
C. Adhesive anchors used in cracked and uncracked concrete shall have been tested and qualified for use in accordance with ICC-ES AC308. All anchors shall be installed per the anchor manufacturer's written instructions.
D. Mechanical anchors used in solid grouted masonry shall have been tested and qualified for use in accordance with ICC-ES AC01. All anchors shall be installed per the anchor manufacturer's written instructions.
E. Adhesive anchors used in solid grouted masonry shall have been tested and qualified for use in accordance with ICC-ES AC58. All anchors shall be installed per the anchor manufacturer's written instructions.
F. Anchors used in hollow concrete masonry shall have been tested and qualified in accordance with ICC-ES AC106 or ICC-ES AC58 as appropriate. All anchors shall be installed per the anchor manufacturer's written instructions with appropriate screen tubes used for adhesives.

10. Foundations:

A. The soil investigation was prepared by GeoSource. The report number is D14G1399 and the telephone number is 785-272-7200.
B. Spread footings, grade beams, and retaining walls are designed to bear on rammed aggregate piers designed by supplier to stiffen surrounding soils to safely sustain 5,000 psf.
C. Retaining structures are designed for a lateral load of 60 pcf equivalent fluid pressure.
D. Contractor shall provide for dewatering at excavations from either surface water or seepage.
E. All foundation excavations shall be inspected by a qualified soil engineer, approved by the architect and/or structural engineer, prior to placement of steel or concrete. This inspection shall be at the owner's expense.
F. All concrete in retaining walls shall have attained its design strength prior to being backfilled.
G. All basement walls shall not be backfilled until the first floor slab or wood decking is installed or the wall is temporarily braced by the contractor and the concrete has reached of its design strength.
H. Moisture content in soils beneath building locations should not be allowed to change after footing excavations and after grading for slabs on grade are completed. If subgrade materials become desiccated or softened by water or other conditions, recompact materials to the density and water content specified for engineered fill. Do not place concrete on frozen ground.

11. Concrete Block Masonry:

A. Concrete block used in exterior walls or load bearing walls shall meet the requirements of ASTM C90 and have a minimum net compressive strength of 3050 psi and laid up using type N mortar such that f'm equals 2000 psi. Mortar shall be volume proportion based cement lime mortar. Proportioning shall be completed by box measure. Any block in contact with earth shall be normal weight units, laid using type "S" mortar and grouted solid.
B. The contractor shall provide adequate temporary bracing for all masonry walls during construction.
C. All concrete block shall have 9 gage (or larger) horizontal joint reinforcing (ladder or truss) per architectural drawings and specifications (16" maximum vertical spacing).
D. Cavity wall construction shall be reinforced as designed for specific concrete block used. The horizontal joint reinforcing shall be of the ladder or truss style per specification and continuous between brick and block, as prescribed by architectural drawings.
E. Concrete block shall be reinforced as follows in 6", 8", 10", and 12" walls:
1.) Vertical reinforcing shall be a minimum of 1 - #5 bar in 6" and 8" walls at 48" on center and 2 - #5 bars in 10" and 12" walls at 16" on center, at each corner, at each door and window jamb, each side of control joints and in the end void of each length of wall. Lap splices for masonry vertical reinforcing shall be 48 bar diameters or 24" minimum.
2.) Horizontal reinforcing:
A.) Horizontal joint reinforcing as noted above.
B.) Continuous horizontal bars shall be included per section or detail in bond beam or optional running bond be where noted. Where bond beams are continuous at corners of walls, supply corner bars matching size of horizontal bars (minimum 2'-0" or 48 bar diameters in each direction).
F. Grout, where noted above, shall have a minimum design ultimate compressive strength of 3000 psi at 28 day test and 3/8" maximum aggregate size.
G. Non-load bearing concrete block walls shall be isolated from adjacent structural elements with vertical 3/8" control joints and at the top of the wall with 1" air space or compressible material and support per architectural detail.
H. Unless otherwise covered on architectural plans or specifications, vertical control joints in masonry construction shall be 3/8" wide, full height of wall.
Joints shall be spaced at a maximum of 24'-0" on center and coordinated with the architect. All horizontal joint reinforcing shall be discontinuous at control joints in masonry. All bond beam horizontal reinforcing shall be continuous through control joints.
I. Lintels over all openings in walls not otherwise covered shall be one 5" x 3-1/2" x 5/16" angle for each 4" of masonry. All exterior lintels to be galvanized.
J. Walls shall be anchored top and bottom by dowels matching wall vertical reinforcing (unless noted otherwise) from floor slab bottom and bracing angles at the top, per details on the drawings.

12. Light Gage Structural Stud Framing:

A. All load bearing, light gage structural studs, track, and bridging shall be of the type, size, gage, and spacing as shown on the plans.
B. All materials shall be 33,000 psi minimum yield, except studs of 16 gage or heavier shall have a minimum yield of 50,000 psi.
C. All properties, fabrication, and erection shall be in accordance with latest editions of the AISI "Specifications for the Design of Cold-Formed Structural Members."
D. All framing components shall be cut squarely or at an angle to fit squarely against abutting members. Splicing of axially loaded members is not permitted. Members shall be held firmly in place until properly fastened. Attachments of similar components shall be by welding, screw attachment, or bolting. Wire tying of components is not permitted.
E. Tracks shall be securely anchored to floor and overhead members. Special anchorage requirements required for wind bracing shall be as shown on the plans.
F. Multiple studs supporting beams or headers shall be fastened together with (2) - #10 self-drilling screws at 12" on center.
G. Prior to fabrication and/or erection, the contractor shall submit shop drawings complete with detail of erection, fabrication, attachments, anchorages, lintels, etc., for review by the architect/engineer.

14. Shop Drawing Review:

A. Bob D. Campbell and Company, Inc. will review the General Contractor's (GC) shop drawings and related submittals (as indicated below) with respect to the ability of the detailed work, when complete, to be a properly functioning integral element of the overall structural system designed by Bob D. Campbell and Company, Inc.
B. Prior to submittal of a shop drawing or any related material to Bob D. Campbell and Company, Inc., the GC shall:
1) Review each submission for conformance with the means, methods, techniques, sequences and operations of construction and safety precautions and programs incidental thereto, all of which are the sole responsibility of the GC.
2) Review and approve each submission.
3) Stamp each submission as approved.
C. Bob D. Campbell and Company, Inc. shall assume that no submission comprises a variation unless the GC advises Bob D. Campbell and Company, Inc. with written documentation.
D. Shop drawings and related material (if any) required are indicated below. Should Bob D. Campbell and Company, Inc. require more than ten (10) working days to perform the review, Bob D. Campbell and Company, Inc. shall so notify the GC.
1) Concrete mix designs and material certificates including admixtures and compounds applied to the concrete after placement.
2) Reinforcing steel shop drawings including erection drawings and bending details. Bar list will not be reviewed for correct quantities.
3) Elevations of all reinforced concrete masonry walls at a scale no smaller than 3/8" = 1'-0" showing all required reinforcing.
4) Grout mix designs (for CMU).
5) Construction and control joint plans and/or elevations.
6) Structural steel shop drawings including erection drawings and piece details. Include joist, decking and connector submittals. Include miscellaneous framing specified on the structural drawings, but do not submit framing specified on non-structural drawings for Bob D. Campbell and Company, Inc. review.
7) Structural steel connection design calculations.
8) Miscellaneous anchors shown on the structural drawings.
9) Standard details and bridging information for light gage metal framing. Erection plans and details for light gage metal joists and lintels spanning more than 6'-0" shall be submitted. Standard wall framing need not be submitted.

15. Structural Special Inspection:

A. The structural design for this project is based on completion of special inspections during construction in accordance with section 1704 of the 2012 International Building Code. The owner shall employ one or more qualified special inspectors to provide the required special inspections.
B. Special Inspections shall be required for the items indicated below. The General Contractor shall provide notification to the inspector when items requiring inspection are ready to be inspected and provide access for those inspections.
1) Placement of Concrete
2) Testing of Concrete
3) Bolts in Concrete
4) Placement of Reinforcing Steel
5) Verification of Soil Bearing Capacities
6) Drilled Piers / Piles / Caissons
7) High Strength Bolting
8) Post-Installed Anchors
9) Structural Welding
10) Steel Frame Inspection
11) Structural Masonry
12) Shop Fabrication of Structural Steel
C. The special inspector shall furnish inspection reports to the building official, owner, architect and structural engineer, and any other designated person.
D. All discrepancies shall be brought to the immediate attention of the contractor for correction, then, if uncorrected, to the proper design authority, building official and structural engineer.
E. The special inspector shall submit a final signed report stating that the work requiring special inspection was, to the best of the inspector's knowledge, in conformance with the approved plans and specifications and the applicable workmanship provisions of the building code.

16. Copyright and Disclaimer:

A. All drawings in the structural set (S-series drawings) are the copyrighted work of Bob D. Campbell and company, Inc. These drawings may not be photographed, traced, or copies in any manner without the written permission of Bob D. Campbell and Company, Inc. Exception: Original drawings may be printed for distribution to the owner, architect, and general contractor for coordination, bidding, and construction. Subcontractors may not reproduce these drawings for any purpose or in any manner.
B. I, Clark A. Basinger, P.E., registered engineer and a representative of Bob D. Campbell and Company, Inc., do hereby accept professional responsibility as required by the professional registration laws of this state for the structural design drawings consisting of S-series drawings. I hereby disclaim responsibility for all other drawings in the construction document package, they being the responsibility of other design professionals whose seals and signed statements may appear elsewhere in the construction document package.

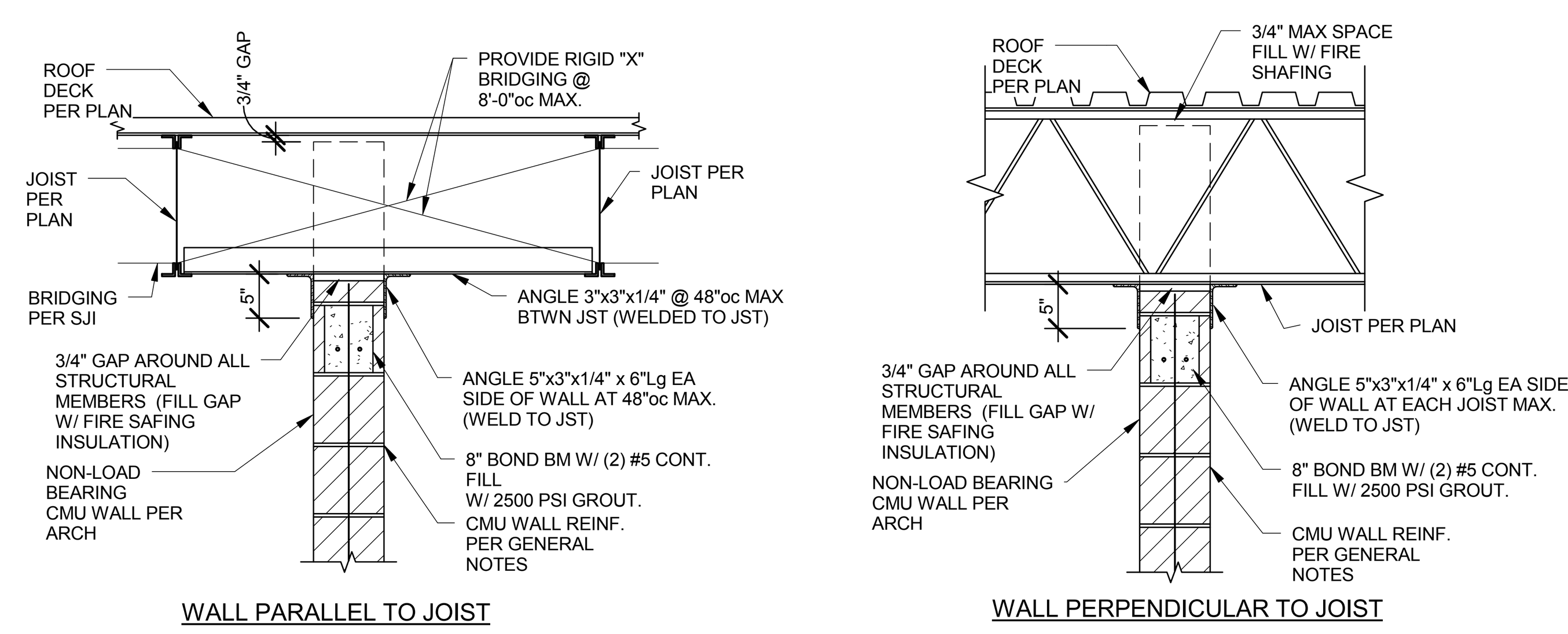

TYPICAL BRACING DETAILS FOR NON-LOAD-BEARING WALLS THAT EXTEND TO ROOF DECK (REFER TO ARCHITECTURAL DRAWINGS FOR LOCATION)

1 SECTION
3/4" = 1'-0"

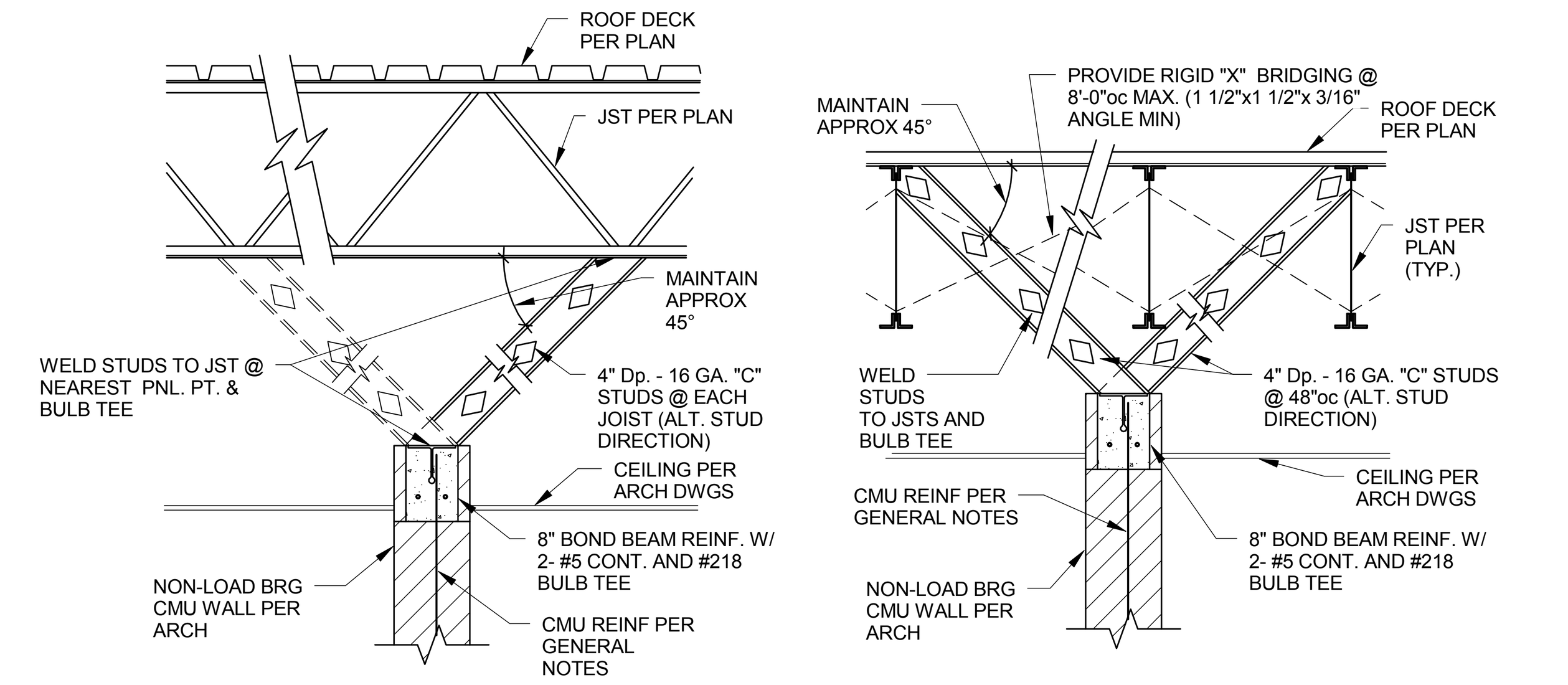

TYPICAL BRACING DETAILS FOR NON-LOAD-BEARING WALLS THAT DO NOT EXTEND TO ROOF DECK (REFER TO ARCHITECTURAL DRAWINGS FOR LOCATION)

2 SECTION
3/4" = 1'-0"

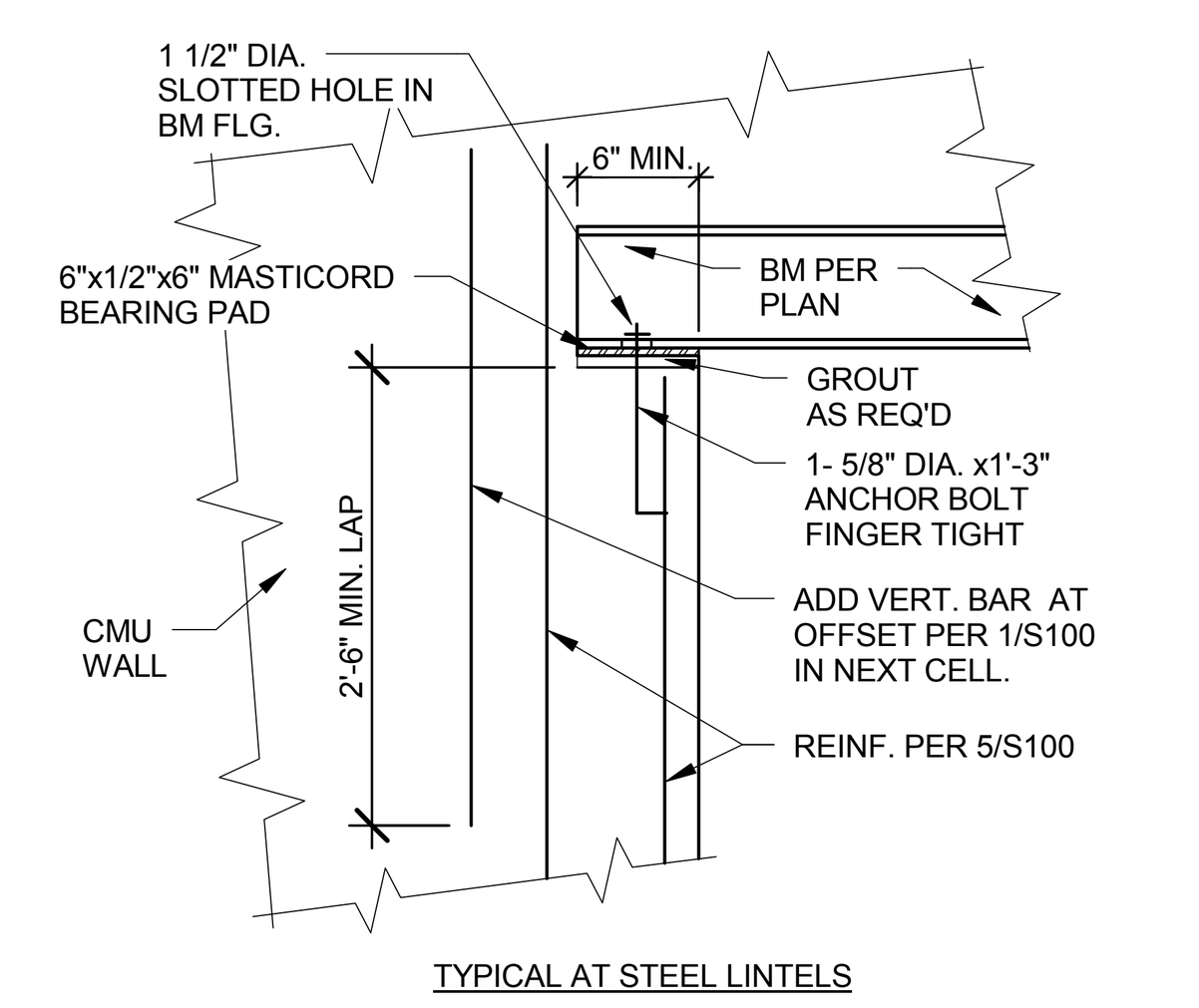

3 TYPICAL BEAM BEARING ON CMU DETAIL
3/4" = 1'-0"

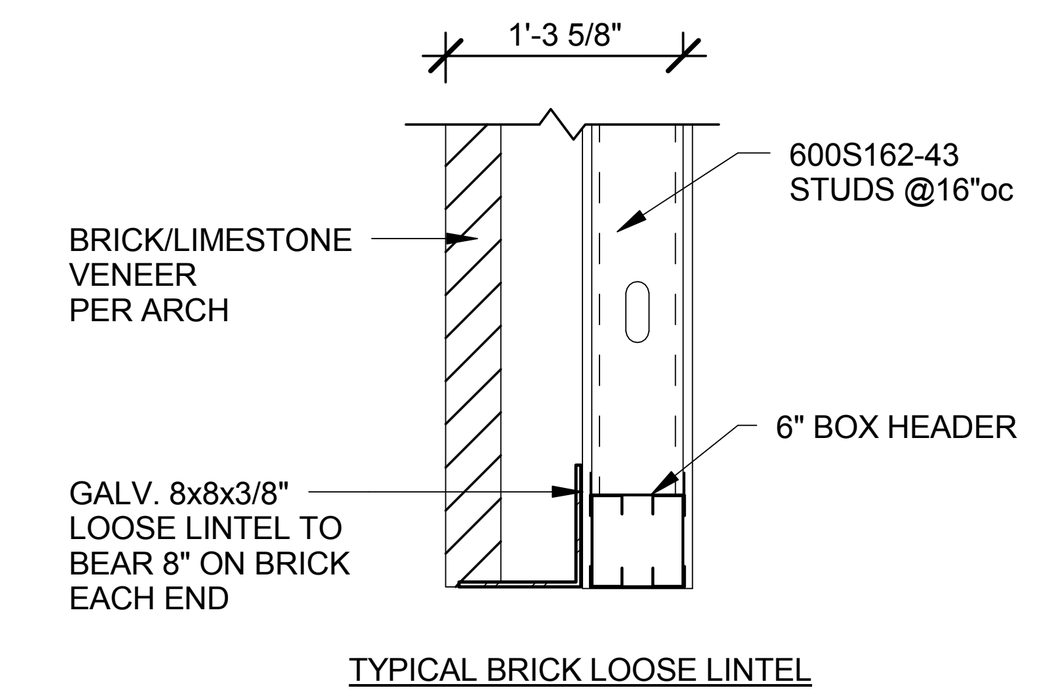

4 TYPICAL LOOSE LINTEL
3/4" = 1'-0"

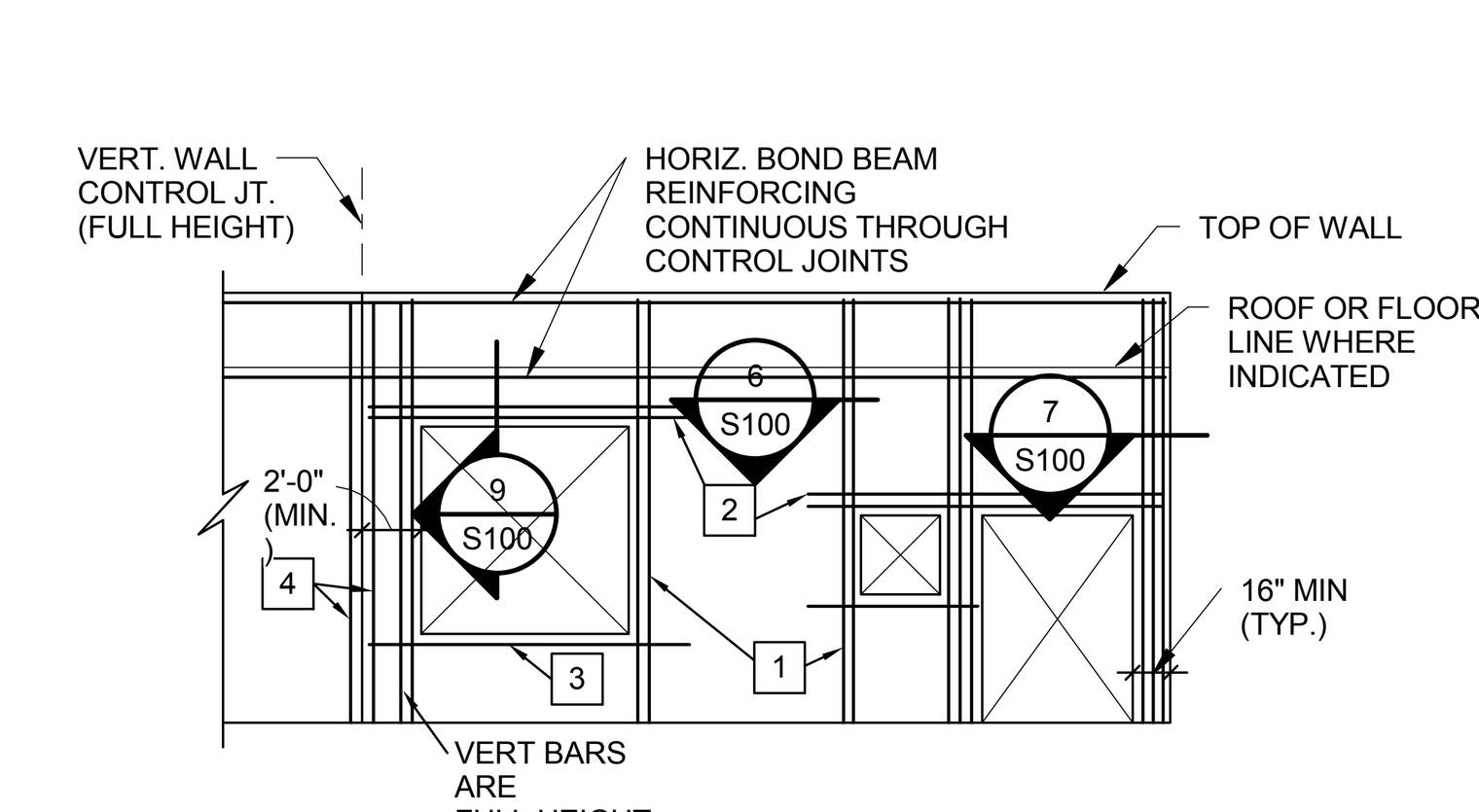

TYPICAL WALL REINFORCING AT OPENINGS

8/S100 LEGEND:

1. FULL HEIGHT VERTICAL BARS AS JAMB REINFORCING IN FIRST 2 CELLS ADJACENT TO OPENING. REINFORCE EACH CELL WITH SIZE & QUANTITY OF BAR TO MATCH WALL REINFORCING (1 BAR TYPICAL IN 8" WALLS AND 2 BARS TYPICAL IN 12" WALLS).
2. LINTEL REINFORCING PER SECTION 10/S100. EXTEND 2'-0" PAST EDGE OF OPENING ON EACH SIDE (TYPICAL).
3. 2-#5 CONTINUOUS HORIZONTAL BARS AS SILL REINFORCING IN 8" COURSE BELOW OPENING (U.N.O.). EXTEND 2'-0" PAST EDGE OF OPENING ON EACH SIDE (TYPICAL).
4. FULL HEIGHT VERTICAL BARS PER MASONRY VERTICAL REINFORCING SCHEDULE LOCATED IN END CELL AT EACH SIDE OF VERTICAL WALL CONTROL JOINTS.

GENERAL CRITERIA: (SECTION 8/S100 CONT.)
1.) VERTICAL REINF. BARS SHALL BE DOWELED TO FOUNDATION WITH A DOWEL OF MATCHING SIZE AND SPACING.

2.) CONTRACTOR SHALL COORDINATE AND VERIFY OPENINGS IN MASONRY WALLS. OPENINGS SHALL BE DETAILED ON REINFORCING STEEL SHOP DRAWING ELEVATIONS.

3.) VERTICAL CONTROL JOINTS IN MASONRY WALLS SHALL BE 3/8" WIDE, FULL HEIGHT OF WALL. JOINTS SHALL BE SPACED AT A MAXIMUM OF 24'-0" o.c. AND NOT LESS THAN 2'-0" FROM THE EDGE OF ANY OPENING. ALL HORIZONTAL JOINT REINFORCING SHALL BE DISCONTINUOUS AT CONTROL JOINTS. ALL BOND BEAM HORIZONTAL REINFORCING SHALL BE CONTINUOUS THROUGH CONTROL JOINTS. CONTRACTOR SHALL COORDINATE AND VERIFY ALL CONTROL JOINT LOCATIONS.

5 TYPICAL CMU WALL REINFORCING
1 1/2" = 1'-0"

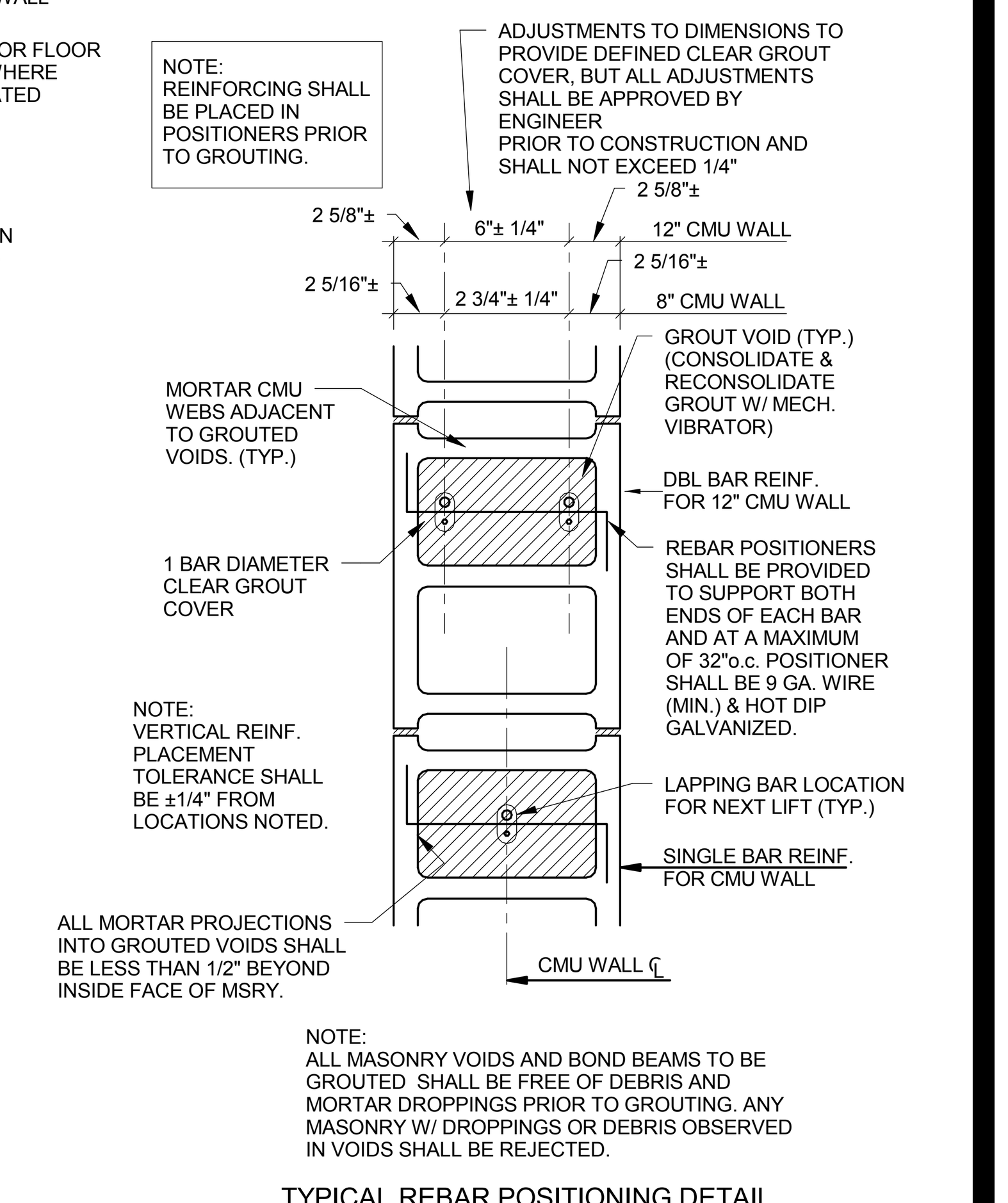

NOTE:
ALL MASONRY VOIDS AND BOND BEAMS TO BE GROUTED SHALL BE FREE OF DEBRIS AND MORTAR DROPPINGS PRIOR TO GROUTING. ANY MASONRY W/ DROPPINGS OR DEBRIS OBSERVED IN VOIDS SHALL BE REJECTED.

TYPICAL REBAR POSITIONING DETAIL

6 SECTION
1 1/2" = 1'-0"

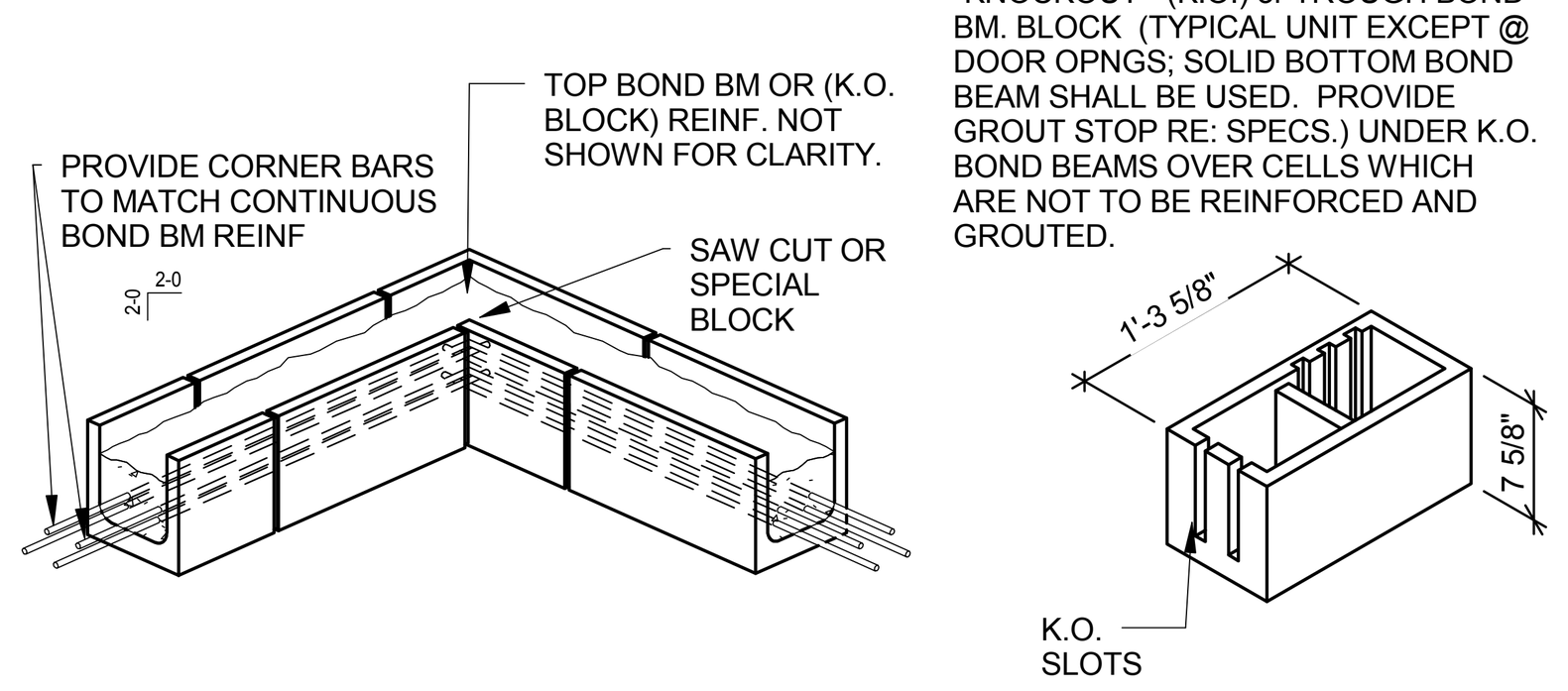

7 SECTION
3/4" = 1'-0"

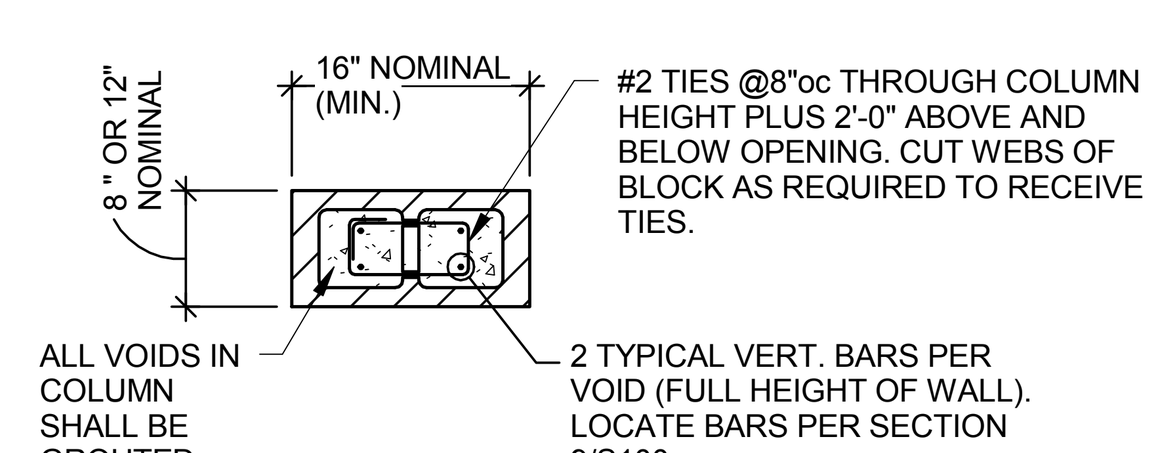

TYPICAL MASONRY COLUMN

8 SECTION
3/4" = 1'-0"

TYPICAL MASONRY REINFORCING NOTE:

ALL INTERIOR & EXTERIOR MSRY WALLS SHOWN ON ARCHITECTURAL AND STRUCTURAL DRAWINGS ARE TO BE REINFORCED HORIZONTALLY WITH BOND BEAMS (2 - #5 BOTTOM) AT BOTTOM COURSE, TOP COURSE, JOIST BEARING ELEVATION AND AT 8'-0" MAXIMUM O.C. AND VERTICALLY AS INDICATED ON DRAWINGS. THESE WALLS ARE TO BE ANCHORED TOP AND BOTTOM TO THE FOUNDATION, FLOOR, OR ROOF PER TYPICAL DETAILS. THE VERTICAL REINFORCING IS CONTINUOUS (IN 6'-6" MAXIMUM LENGTHS, LAPPED 2'-6" MINIMUM). FILL BLOCK CELLS AND BOND BEAMS WITH 2,500psi GROUT.

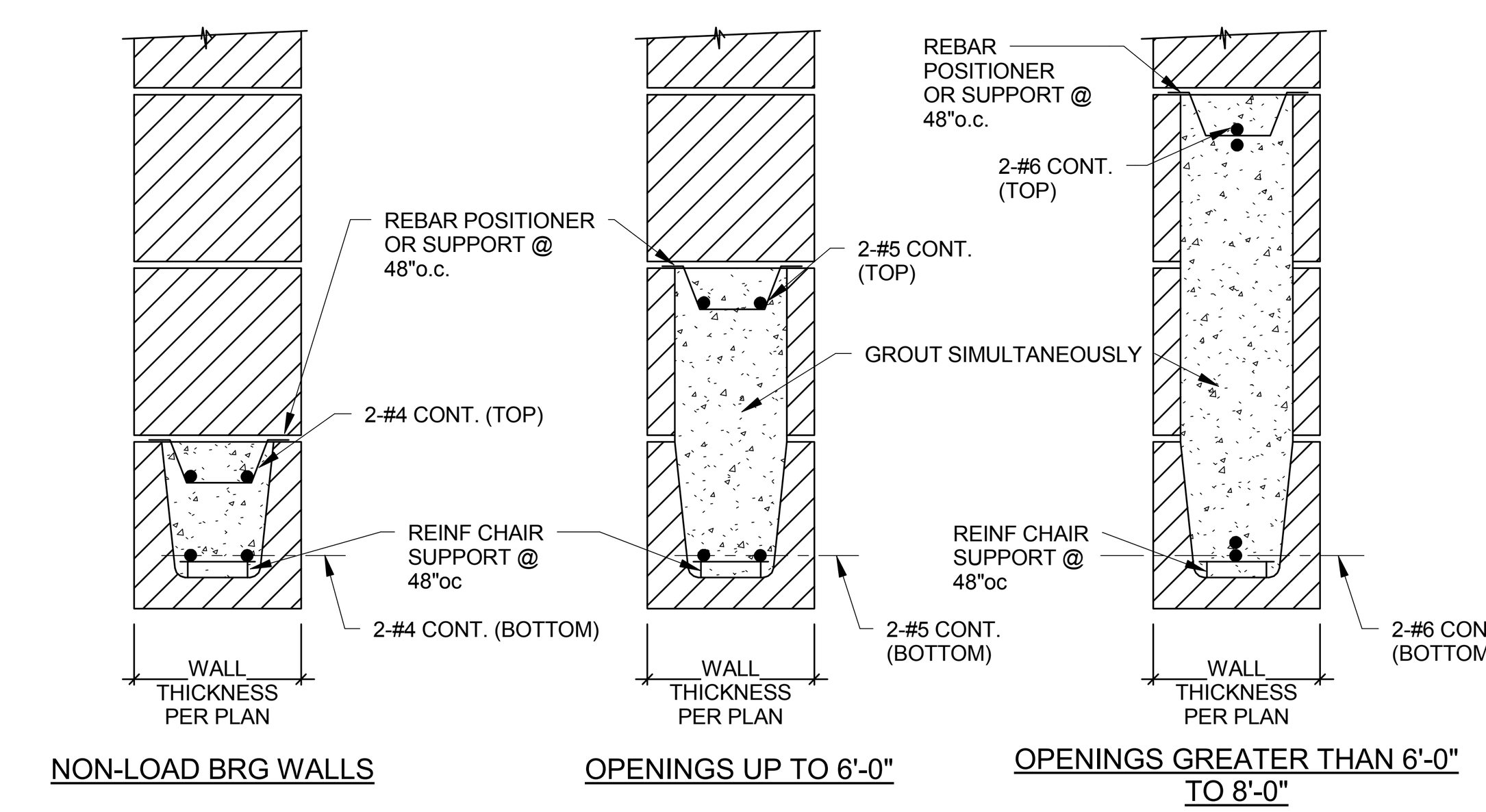

TYPICAL LINTELS AT ALL CMU WALLS

9 TYPICAL CMU LINTEL REINFORCING
1 1/2" = 1'-0"

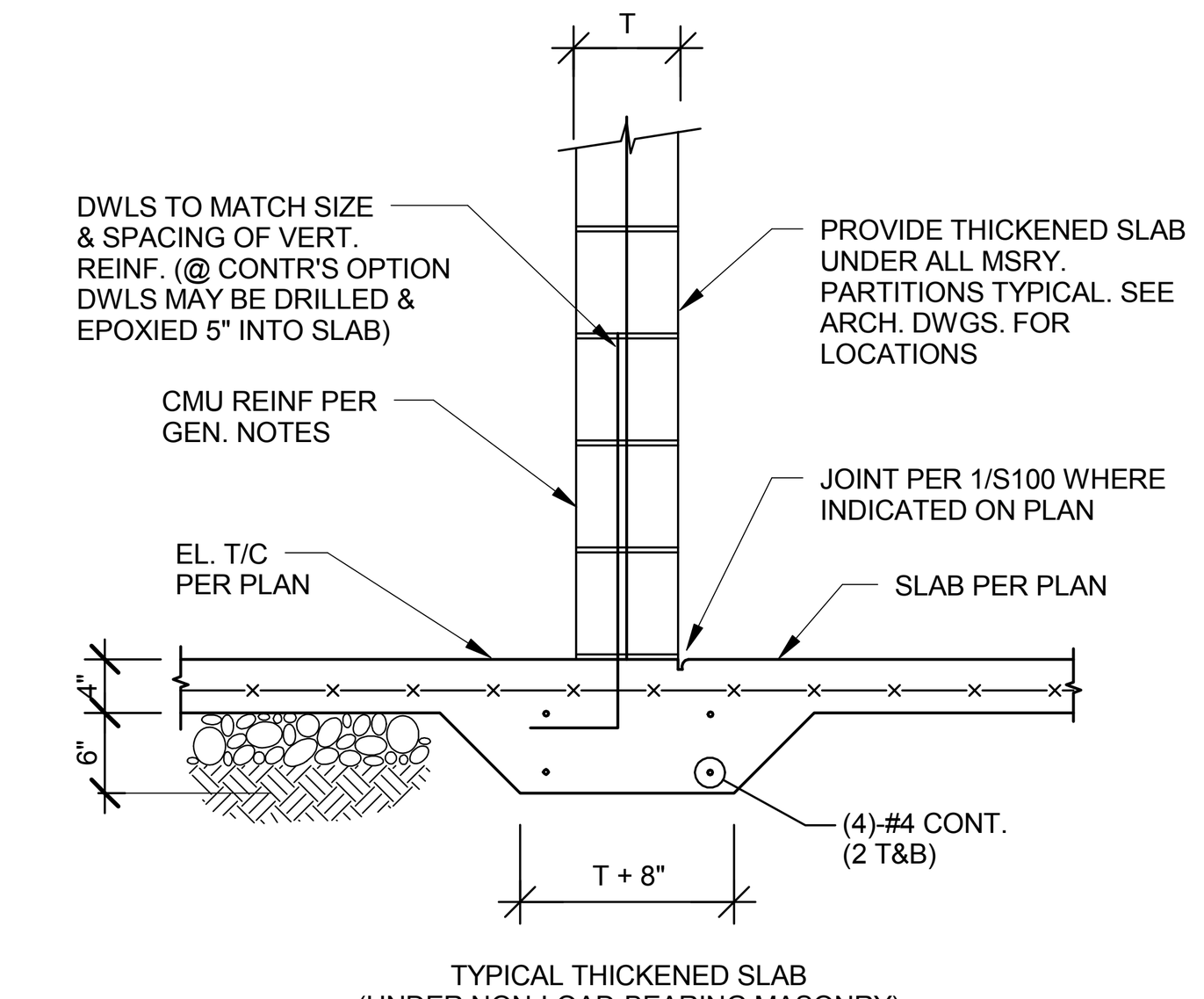

TYPICAL THICKENED SLAB (UNDER NON-LOAD-BEARING MASONRY)

10 TYP. NON-LOAD BRG CMU WALL FOOTING
3/4" = 1'-0"

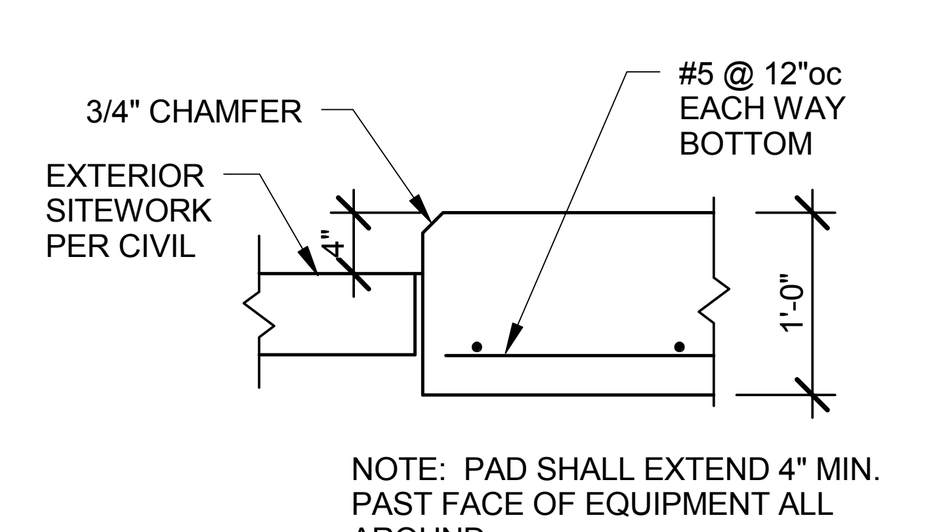

NOTE: PAD SHALL EXTEND 4" MIN. PAST FACE OF EQUIPMENT ALL AROUND

11 MECHANICAL EQUIPMENT PAD
3/4" = 1'-0"

LEGEND

...SPAN DIRECTION OF DECK
...FOOTING SIZE MARK
...COLUMN SIZE MARK
...DENOTES MOMENT CONNECTION

SOG-1	...5" CONCRETE SLAB REINFORCED WITH 6x6-W2.9xW2.9 WWF ATOP VAPOR BARRIER PER GENERAL NOTES ATOP 4" COMPACTED GRANULAR MATERIAL ATOP 24" LOW VOLUME CHANGE MATERIAL
SOG-2	...4" CONCRETE SLAB REINFORCED WITH 6x6-W2.9xW2.9 WWF ATOP VAPOR BARRIER PER GENERAL NOTES ATOP 4" COMPACTED GRANULAR MATERIAL ATOP 24" LOW VOLUME CHANGE MATERIAL
RD-1	...DENOTES 1½"Dp x 22ga GALV. WIDE RIB ROOF DECK ATTACHED TO STRUCTURE TO ACHIEVE 300 PLF DIAPHRAGM SHEAT CAPACITY
RD-2	...DENOTES 1½"Dp x 18ga GALV. WIDE RIB ROOF DECK ATTACHED TO STRUCTURE TO ACHIEVE 300 PLF DIAPHRAGM SHEAT CAPACITY
NCD-1	...DENOTES 3" CONCRETE SLAB REINF. W/ 6x6-W2.9xW2.9 WWF ATOP 9/16" x 26ga GALV. FORM DECK
CD-1	...DENOTES 5" CONCRETE SLAB REINF. W/ 6x6-W2.9xW2.9 WWF ATOP 2" x 18ga GALV. COMPOSITE DECK (5" TOTAL THICKNESS)

HTK ARCHITECTS PA
900 S. KANSAS AVE., SUITE 200 TOPEKA KANSAS 66612 P 785.266.5373
9300 W 110TH ST. STE. 150 OVERLAND PARK, KANSAS 66210 P 913.663.5373
www.htkarchitects.com

CLARK ANDREW BASINGER LICENSED 20881 KANSAS PROFESSIONAL ENGINEER

DATE:
- 4-15-15

REVISED DATE:
- 12-18-14
- 2-9-15
- 3-10-15

HTK PROJECT NUMBER:
- 1410.03

Department of Administration
Office of Facilities and Procurement Management
800 SW Jackson, Suite 700
Topeka, Kansas 66612-1216
Phone 785-296-8899
FAX 785-296-3456

STATE OF KANSAS
STATE OF KANSAS ENERGY & SERVICE CENTER
221 SW 7th Street
BUILDING NUMBER 17300-0038

DATE: 4-15-15 DRAWN BY: Author CHECKED BY: Checker REV:

GENERAL NOTES & SECTIONS

A-012651

S100

CONSTRUCTION DOCUMENTS

4/16/2015 12:03:38 PM U:\Clients H-J\HTK Projects\HTK1408 - Kansas Energy\HTK1408 Dwgs\HTK1408 -S15- Kansas Energy_CLARK.rvt

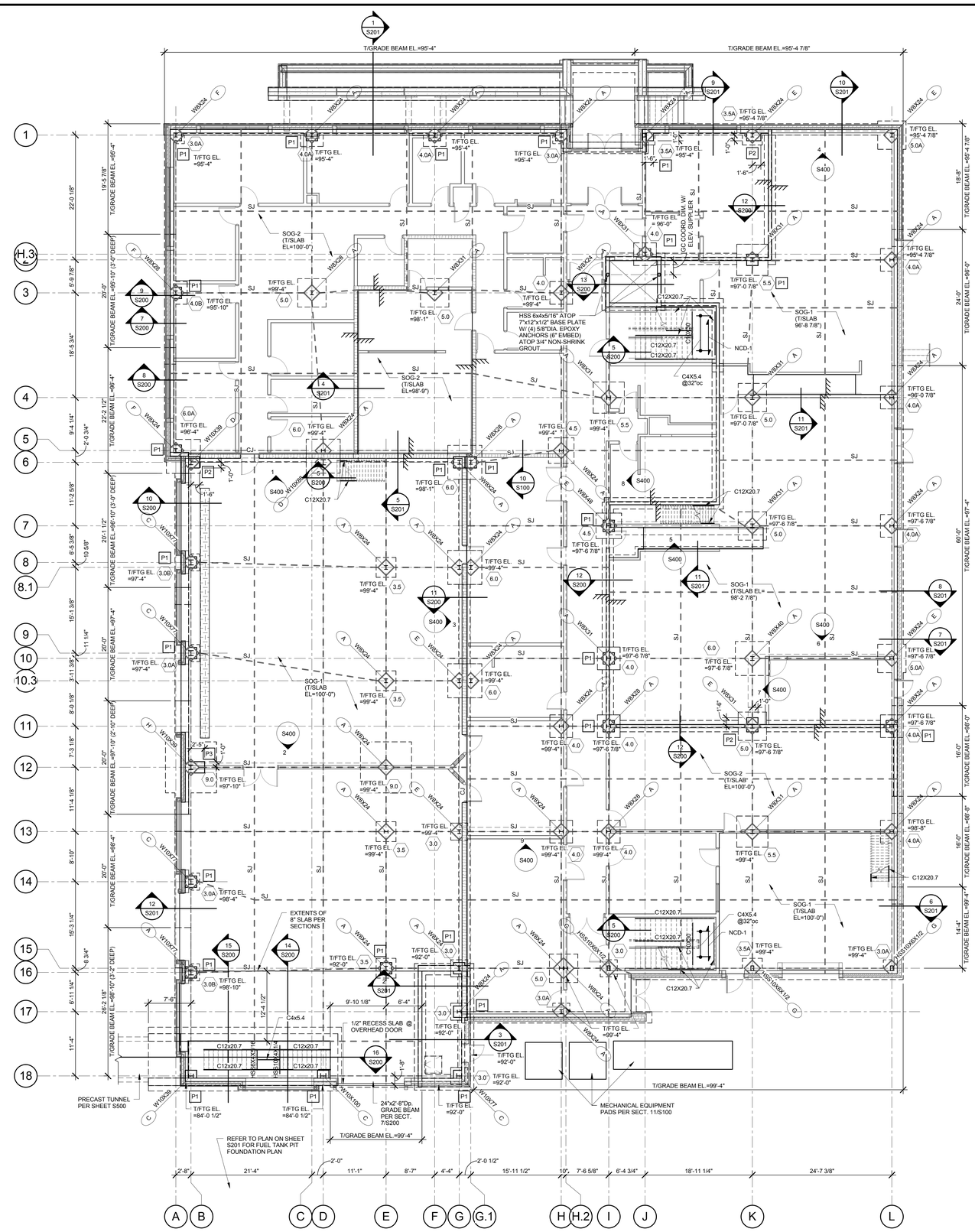
T/GRADE BEAM EL.=95'-4"
T/GRADE BEAM EL.=95'-4 7/8"
SOG-2 (T/SLAB EL=100'-0")
SOG-1 (T/SLAB EL=100'-0")
SOG-1 (T/SLAB 96'-8 7/8")
SOG-2 (T/SLAB EL=98'-9")
SOG-1 (T/SLAB EL= 98'-2 7/8")
SOG-2 (T/SLAB EL=100'-0")
SOG-1 (T/SLAB EL=100'-0")
HSS 6x4x5/16" ATOP 7"x12"x1/2" BASE PLATE W/ (4) 5/8"DIA. EPOXY ANCHORS (6" EMBED) ATOP 3/4" NON-SHRINK GROUT
GC COORD. DIM. W/ ELEV. SUPPLIER
NCD-1
C12X20.7
C4X5.4 @32"oc
EXTENTS OF 8" SLAB PER SECTIONS
1/2" RECESS SLAB @ OVERHEAD DOOR
MECHANICAL EQUIPMENT PADS PER SECT. 11/S100
PRECAST TUNNEL PER SHEET S500
REFER TO PLAN ON SHEET S201 FOR FUEL TANK PIT FOUNDATION PLAN
24"x2'-8"Dp. GRADE BEAM PER SECT. 7/S200
T/GRADE BEAM EL.=99'-4"
T/FTG EL. =95'-4
T/FTG EL. =95'-4 7/8"
T/FTG EL. =96'-0
T/FTG EL. =97'-0 7/8"
T/FTG EL. =97'-6 7/8"
T/FTG EL. =99'-4
T/FTG EL. =98'-1"
T/FTG EL. =95'-10"
T/FTG EL. =96'-4"
T/FTG EL. =98'-4"
T/FTG EL. =97'-4"
T/FTG EL. =97'-10"
T/FTG EL. =92'-0"
T/FTG EL. =92'-0 1/2"
T/FTG EL. =84'-0 1/2"
T/FTG EL. =98'-10"
T/FTG EL. =92'-0"
T/FTG EL. =96'-0 7/8"
T/FTG EL. =97'-6 7/8"
T/FTG EL. =95'-4 7/8"
T/FTG EL. =98'-8"
T/FTG EL. =97'-7 7/8"
T/FTG EL. =98'-4"
T/FTG EL. =99'-4"
T/FTG EL. =97'-6 7/8"
T/FTG EL. =97'-7 7/8"
T/FTG EL. =96'-0 7/8"
T/FTG EL. =97'-0 7/8"
T/FTG EL. =97'-6 7/8"
T/FTG EL. =97'-6 7/8"
T/FTG EL. =97'-6

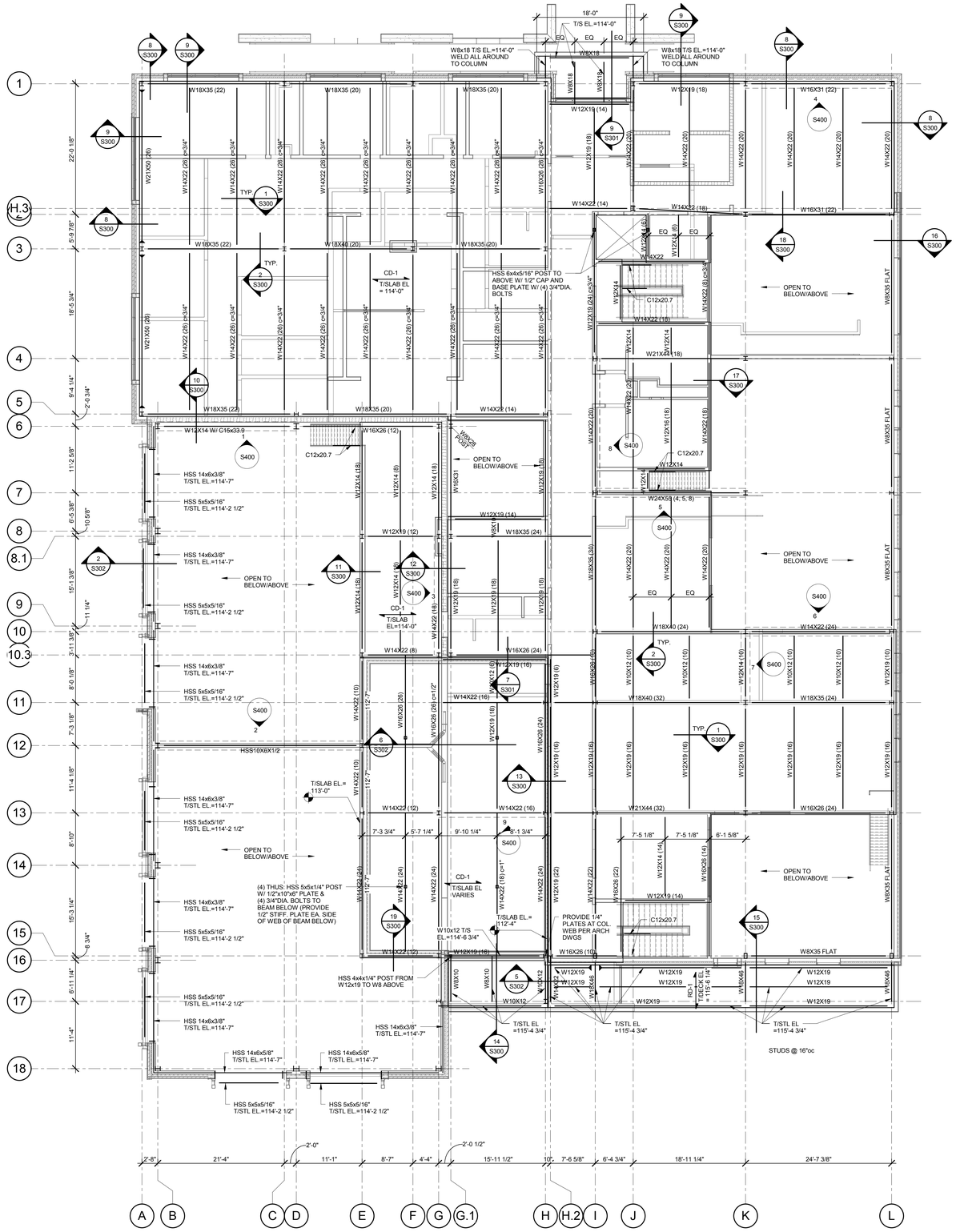

1 SECOND FLOOR FRAMING PLAN

1/8" = 1'-0"

NOTES:
1.) REFER TO GENERAL NOTES & LEGEND ON SHEET S100.
2.) NUMBER IN PARENTHESIS REPRESENTS QUANTITY OF 3/4"DIAMETER x4"Lg. HEADED SHEAR CONNECTORS.
3.) C=X" DENOTES MAGNITUDE OF UPWARD CAMBER AT BEAM MIDSPAN.

NORTH

HTK ARCHITECTS PA
900 S. KANSAS AVE., SUITE 200 9300 W 110TH ST, STE. 150
TOPEKA, KANSAS 66112 OVERLAND PARK, KANSAS 66210
P 785.296.5373 P 913.663.5373
www.htkarchitects.com

DATE:
- 4-15-15

REVISED DATE:
- 12-18-14
- 2-9-15
- 3-10-15

HTK PROJECT NUMBER:
- 1410.03

Department of Administration
Office of Facilities and Procurement Management
800 SW Jackson, Suite 700
Topeka, Kansas 66612-1216
Phone 785-296-8899
FAX 785-296-3456

STATE OF KANSAS
STATE OF KANSAS ENERGY & SERVICE CENTER
221 SW 7th Street
BUILDING NUMBER 17300-0038

DATE: 4-15-15 DRAWN BY: Author CHECKED BY: Checker REV:

SECOND FLOOR FRAMING PLAN

A-012651

S102

CONSTRUCTION DOCUMENTS

4/16/2015 12:03:39 PM U:\Clients H-J\HTK Projects\HTK1408 - Kansas Energy\HTK1408 Dwgs\HTK1408 -S15- Kansas Energy_CLARK.rvt

JCSBC
2-2-2016
Att.9G.--0052

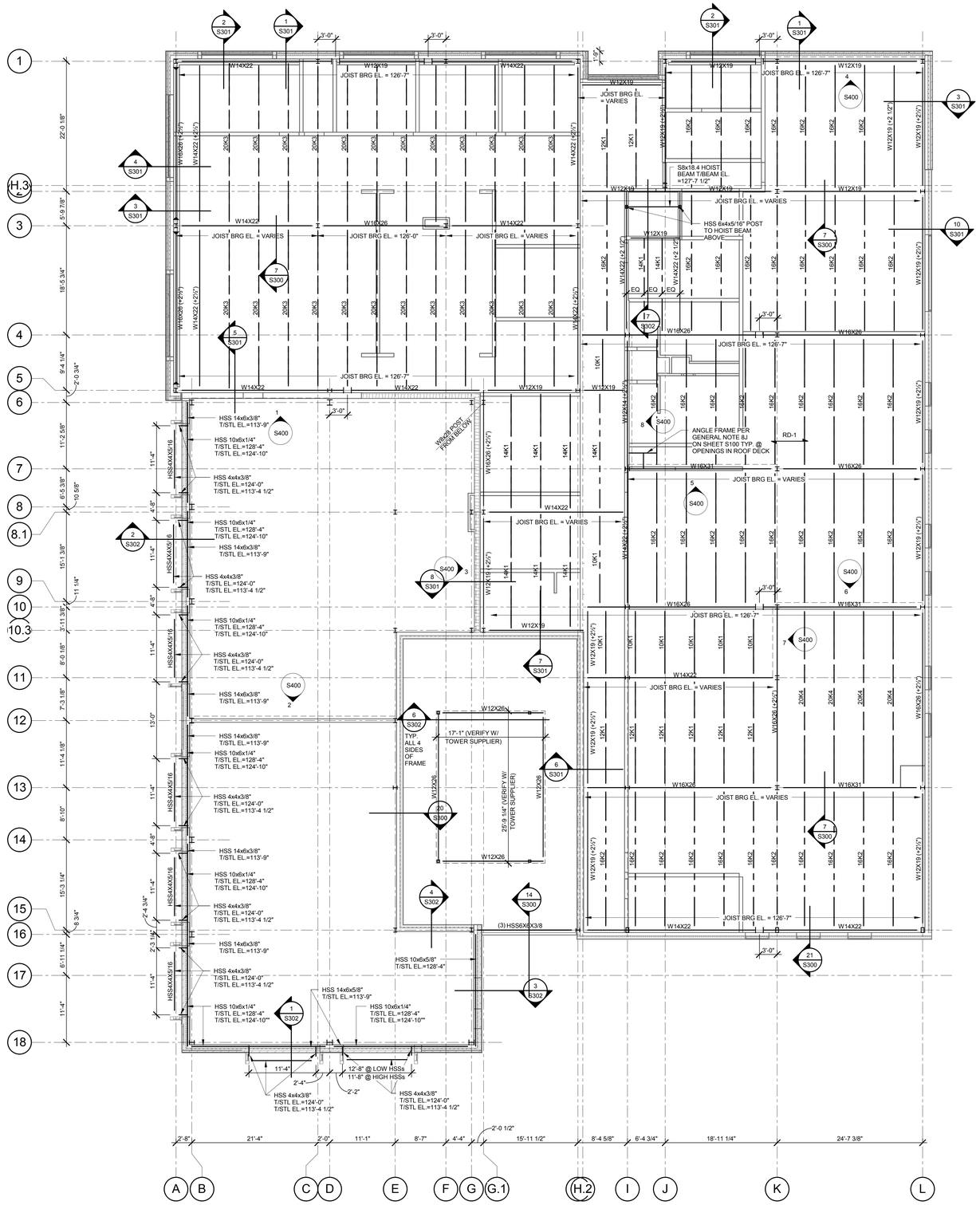

1 LOW ROOF FRAMING PLAN

1/8" = 1'-0"

NOTES:
1.) REFER TO GENERAL NOTES & LEGEND ON SHEET S100.

NORTH

HTK ARCHITECTS PA
900 S. KANSAS AVE., SUITE 200 TOPEKA KANSAS 66612
9300 W 110TH ST. STE 160 OVERLAND PARK, KANSAS 66210
T 785.640.0123 F 785.640.0125
www.htkarchitects.com

DATE:
- 4-15-15

REVISED DATE:
- 12-18-14
- 2-9-15
- 3-10-15
-

HTK PROJECT NUMBER:
- 1410.03

Department of Administration
Office of Facilities and
Procurement Management
800 SW Jackson Street, Suite 808
Topeka, Kansas 66612-1216
Phone 785-296-8899
FAX 785-296-3456

STATE OF KANSAS
STATE OF KANSAS ENERGY & SERVICE CENTER
221 SW 7th Street
BUILDING NUMBER 17300-0038

DATE: 4-15-15 DRAWN BY: Author CHECKED BY: Checker REV:

LOW ROOF FRAMING PLAN

A-012651

S103

CONSTRUCTION DOCUMENTS

4/16/2015 12:03:39 PM U:\Clients H-J\HTK Projects\HTK1408 - Kansas Energy\HTK1408 Dwgs\HTK1408 -S15- Kansas Energy_CLARK.rvt

JCSBC
2-2-2016
Att.9G.--0053

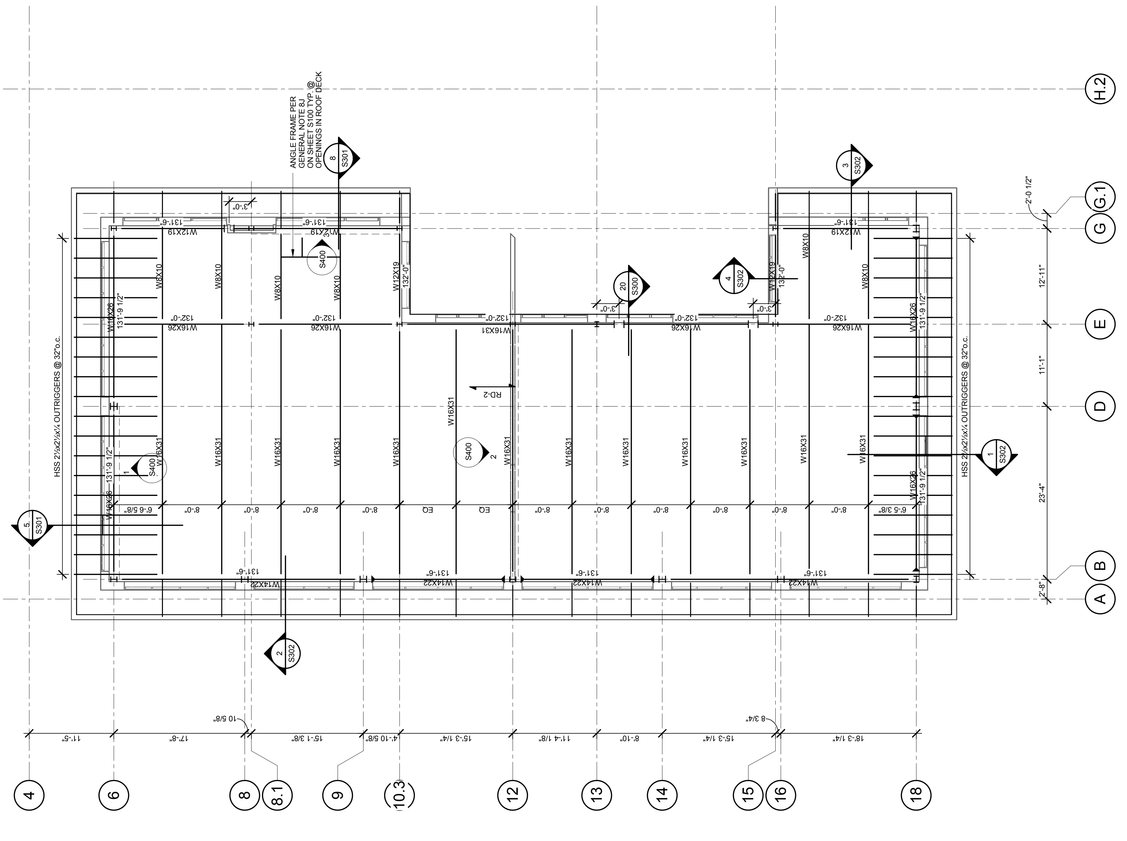
ANGLE FRAME PER GENERAL NOTE 8J ON SHEET S100 TYP. @ OPENINGS IN ROOF DECK
HSS 27x22x1/2 OUTRIGGERS @ 32'0 c.c.
HSS 27x22x1/2 OUTRIGGERS @ 32'0 c.c.
W16X31
W18X31
W8X10
W12X19
W14X22
W16X26
W16X36
W16X40
W16X50
W16X57
W16X67
W16X89
W16X100
W18X35
W18X40
W18X46
W18X50
W18X55
W18X60
W18X65
W18X71
W18X76
W18X86
W18X97
W18X106
W18X119
W18X130
W18X143
W18X158
W18X175
W18X192
W18X211
W18X234
W18X258
W18X283
W18X311
W18X343
W18X370
W18X406
W18X443
W18X480
W18X524
W18X575
W18X619
W18X673
W18X733
W18X792
W18X864
W18X943
W18X1028
W18X1123
W18X1234
W18X1352
W18X1453
W18X1578
W18X1705
W18X1846
W18X2009
W18X2192
W18X2392
W18X2607
W18X2845
W18X3106
W18X3387
W18X3698
W18X4028
W18X4398
W18X4797
W18X5227
W18X5702
W18X6222
W18X6787
W18X7402
W18X8077
W18X8812
W18X9612
W18X10488
W18X11442
W18X12487
W18X13626
W18X14869
W18X16226
W18X17708
W18X19327
W18X21096
W18X23030
W18X25142
W18X27447
W18X29961
W18X32700
W18X35681
W18X38923
W18X42447
W18X46276
W18X50434
W18X54946
W18X59838
W18X65139
W18X70878
W18X77087
W18X83799
W18X91050
W18X98878
W18X107321
W18X116420
W18X126220
W18X136767
W18X148110
W18X160300
W18X173392
W18X187443
W18X202511
W18X218657
W18X235944
W18X254439
W18X274211
W18X295330
W18X317870
W18X341907
W18X367520
W18X394790
W18X423800
W18X454636
W18X487387
W18X522145
W18X559004
W18X598063
W18X639424
W18X683192
W18X729475
W18X778384
W18X830033
W18X884540
W18X942026
W18X1002615
W18X1066435
W18X1133618
W18X1204300
W18X1278620
W18X1356720
W18X1438745
W18X1524844
W18X1615170
W18X1709880
W18X1809133
W18X1913092
W18X2021920
W18X2135784
W18X2254850
W18X2379290
W18X2509275
W18X2644980
W18X2786580
W18X2934250
W18X3088170
W18X3248520
W18X3415480
W18X3589230
W18X3769950
W18X3957830
W18X4153050
W18X4355800
W18X4566270
W18X4784650
W18X5011140
W18X5245930
W18X5489220
W18X5741210
W18X6002100
W18X6272090
W18X6551380
W18X6840170
W18X7138660
W18X7447050
W18X7765540
W18X8094330
W18X8433620
W18X8783610
W18X9144500
W18X9516490
W18X9899780
W18X10294570
W18X10701060
W18X11119450
W18X11549940
W18X11992730
W18X12448020
W18X12916010
W18X13396900
W18X13890890
W18X14398180
W18X14918970
W18X15453460
W18X16001850
W18X16564340
W18X17141130
W18X17732420
W18X18338410
W18X18959300
W18X19595290
W18X20246580
W18X20913370
W18X21595860
W18X22294250
W18X23008740
W18X23739530
W18X24486820
W18X25250810
W18X26031700
W18X26829690
W18X27644980
W18X28477770
W18X29328260
W18X30196650
W18X31083140
W18X31987930
W18X32911220
W18X33853210
W18X34814100
W18X35794090
W18X36793380
W18X37812170
W18X38850660
W18X39909050
W18X40987540
W18X42086330
W18X43205620
W18X44345610
W18X45506500
W18X46688490
W18X47891780
W18X49116570
W18X50363060
W18X51631450
W18X52921940
W18X54234730
W18X55570020
W18X56928010
W18X58308900
W18X59712890
W18X61140180
W18X62590970
W18X64065460
W18X65563850
W18X67086340
W18X68633130
W18X70204420
W18X71800410
W18X73421300
W18X75067290
W18X76738580
W18X78435370
W18X80157860
W18X81906250
W18X83680740
W18X85481530
W18X87308820
W18X89162810
W18X91043700
W18X92951690
W18X94886980
W18X96849770
W18X98840060
W18X100858050
W18X102903940
W18X104978130
W18X107080820
W18X109212210
W18X111372500
W18X113561890
W18X115780580
W18X118028770
W18X120306660
W18X122614450
W18X124952340
W18X127320530
W18X129719220
W18X132148610
W18X134608900
W18X137100290
W18X139622980
W18X142177170
W18X144763060
W18X147380850
W18X150030740
W18X152712930
W18X155427620
W18X158175010
W18X160955300
W18X163768690
W18X166615380
W18X169495570
W18X172409460
W18X175357250
W18X178339140
W18X181355330
W18X184406020
W18X187491410
W18X190611700
W18X193767090
W18X196957780
W18X200183970
W18X203445860
W18X206743650
W18X210077540
W18X213447730
W18X216854420
W18X220297810
W18X223778100
W18X227295490
W18X230850180
W18X234442370
W18X238072260
W18X241740050
W18X245445940
W18X249190130
W18X252972820
W18X256794210
W18X260654500
W18X264553890
W18X268492580
W18X272470770
W18X276488660
W18X280546450
W18X284644340
W18X288782530
W18X292961220
W18X297180610
W18X301440900
W18X305742290
W18X310084980
W18X314469170
W18X318895060
W18X323362850
W18X327872740
W18X332424930
W18X337019620
W18X341657010
W18X346337300
W18X351060690
W18X355827380
W18X360637570
W18X365491460
W18X370389250
W18X375331140
W18X380317330
W18X385348020
W18X390423410
W18X395543700
W18X400709090
W18X405919780
W18X411175970
W18X416477860
W18X421825650
W18X427219540
W18X432659730
W18X438146420
W18X443679810
W18X449260100
W18X454887490
W18X460562180
W18X466284370
W18X472054260
W18X477872050
W18X483737940
W18X489652130
W18X495614820
W18X501626210
W18X507686500
W18X513795890
W18X519954580
W18X526162770
W18X532420660
W18X538728450
W18X545086340
W18X551494530
W18X557953220
W18X564462610
W18X571022900
W18X577634290
W18X584296980
W18X591010970
W18X597776260
W18X604593050
W18X611461540
W18X618381930
W18X625354420
W18X632379210
W18X639456500
W18X646586490
W18X653769380
W18X661005370
W18X668294660
W18X675637450
W18X683033940
W18X690484330
W18X697988820
W18X705547610
W18X713160900
W18X720828890
W18X728551780
W18X736329770
W18X744163060
W18X752051850
W18X759996340
W18X767996730
W18X776053220
W18X784166010
W18X792335300
W18X800561290
W18X808844180
W18X817184170
W18X825581460
W18X834036250
W18X842548740
W18X851119130
W18X859747620
W18X868434410
W18X877179700
W18X885983690
W18X894846580
W18X903768570
W18X912749860
W18X921790650
W18X930891140
W18X940051530
W18X949272020
W18X958552810
W18X967894100
W18X977296090
W18X986758980
W18X996282970
W18X1005868260
W18X1015515050
W18X1025223540
W18X1034994130
W18X1044827020
W18X1054722410
W18X1064680500
W18X1074701490
W18X1084785580
W18X1094933070
W18X1105144160
W18X1115419050
W18X1125757940
W18X1136161030
W18X1146628520
W18X1157160610
W18X1167757500
W18X1178419390
W18X1189146480
W18X1199938970
W18X1210797060
W18X1221720950
W18X1232710840
W18X1243767030
W18X1254889720
W18X1266079110
W18X1277335400
W18X1288658790
W18X1300049480
W18X1311507670
W18X1323033560
W18X1334627350
W18X1346289240
W18X1358019430
W18X1369818120
W18X1381685510
W18X1393621800
W18X1405627190
W18X1417701880
W18X1429846070
W18X1442060060
W18X1454344050
W18X1466698240
W18X1479122830
W18X1491618020
W18X1504184010
W18X1516821000
W18X1529529190
W18X1542308780
W18X1555159970
W18X1568083060
W18X1581078250
W18X1594145740
W18X1607285730
W18X1620498420
W18X1633784010
W18X1647142700
W18X1660574690
W18X1674080180
W18X1687659370
W18X1701312460
W18X1715039650
W18X1728841140
W18X1742717130
W18X1756667820
W18X1770693410
W18X1784794100
W18X1798970090
W18X1813221580
W18X1827548770
W18X1841951860
W18X1856431050
W18X1870986540
W18X1885618530
W18X1900327220
W18X1915112810
W18X1929975500
W18X1944915490
W18X1959933080
W18X1975028470
W18X1990201860
W18X2005453450
W18X2020783440
W18X2036192030
W18X2051679420
W18X2067245810
W18X2082891400
W18X2098616390
W18X2114420980
W18X2130305370
W18X2146269760
W18X2162314350
W18X2178439340
W18X2194644930
W18X2210931320
W18X2227298710
W18X2243747300
W18X2260277290
W18X2276888880
W18X2293582270
W18X2310357660
W18X2327215250
W18X2344155240
W18X2361177830
W18X2378283220
W18X2395471610
W18X2412743200
W18X2430098190
W18X2447536780
W18X2465059170
W18X2482665560
W18X2500356150
W18X2518131140
W18X2535990730
W18X2553935120
W18X2571964510
W18X2590079100
W18X2608279090
W18X2626564680
W18X2644936070
W18X2663393460
W18X2681937050
W18X2700567040
W18X2719283630
W18X2738087020
W18X2756977410
W18X2775955000
W18X2795019990
W18X2814172580
W18X2833413070
W18X2852741660
W18X2872158550
W18X2891664040
W18X2911258330
W18X2930941720
W18X2950714410
W18X2970576600
W18X2990528490
W18X3010570280
W18X3030702170
W18X3050924360
W18X3071237050
W18X3091640440
W18X3112134730
W18X3132720120
W18X3153396810
W18X3174165000
W18X3195024890
W18X3215976680
W18X3237020570
W18X3258156760
W18X3279385450
W18X3300706840
W18X3322121130
W18X3343628520
W18X3365229210
W18X3386923400
W18X3408711290
W18X3430593080
W18X3452569070
W18X3474639460
W18X3496804450
W18X3519064240
W18X3541419130
W18X3563869320
W18X3586415010
W18X3609056400
W18X3631793690
W18X3654627080
W18X3677556770
W18X3700583060
W18X3723706150
W18X3746926240
W18X3770243530
W18X3793658220
W18X3817170510
W18X3840780600
W18X3864488690
W18X3888294980
W18X3912199670
W18X3936203060
W18X3960305350
W18X3984506740
W18X4008807430
W18X4033207620
W18X4057707510
W18X4082307300
W18X4107006990
W18X4131806780
W18X4156706870
W18X4181706960
W18X4206807250
W18X4232007740
W18X4257308430
W18X4282709320
W18X4308210410
W18X4333811700
W18X4359513190
W18X4385314880
W18X4411216770
W18X4437218860
W18X4463321150
W18X4489523640
W18X4515826330
W18X4542229220
W18X4568732310
W18X4595335600
W18X4622039090
W18X4648842780
W18X4675746670
W18X4702750760
W18X4729855050
W18X4757059540
W18X4784364230
W18X4811769120
W18X4839274210
W18X4866879500
W18X4894584990
W18X4922390680
W18X4950296570
W18X4978302660
W18X5006408950
W18X5034615440
W18X5062922130
W18X5091329020
W18X5119836110
W18X5148443400
W18X5177150890
W18X5205958580
W18X5234866470
W18X5263874560
W18X5292982850
W18X5322191340
W18X5351500030
W18X5380908920
W18X5410418010
W18X5440027300
W18X5469736790
W18X5499546480
W18X5529456370
W18X5559466460
W18X5589576750
W18X5619787240
W18X5650097930
W18X5680508820
W18X5711019910
W18X5741631200
W18X5772342690
W18X5803154380
W18X5834066270
W18X5865078360
W18X5896190650
W18X5927403140
W18X5958715830
W18X5990128720
W18X6021641810
W18X6053255100
W18X6084968590
W18X6116782280
W18X6148696170
W18X6180710260
W18X6212824550
W18X6245039040
W18X6277353730
W18X6309768620
W18X6342283710
W18X6374899000
W18X6407614490
W18X6440430180
W18X6473346070
W18X6506362160
W18X6539478450
W18X6572694940
W18X6606011630
W18X6639428520
W18X6672945610
W18X6706562900
W18X6740280390
W18X6774098080
W18X6808015970
W18X6842034060
W18X6876152350
W18X6910370840
W18X6944689530
W18X6979108420
W18X7013627510
W18X7048246800
W18X7082966290
W18X7117785980
W18X7152705870
W18X7187725960
W18X7222846250
W18X7258066740
W18X7293387430
W18X7328808320
W18X7364329410
W18X7399950700
W18X7435672190
W18X7471493880
W18X7507415770
W18X7543437860
W18X7579560150
W18X7615782640
W18X7652105330
W18X7688528220
W18X7725051310
W18X7761674600
W18X7798398090
W18X7835221780
W18X7872145670
W18X7909169760
W18X7946294050
W18X7983518540
W18X8020843230
W18X8058268120
W18X8095793210
W18X8133418500
W18X8171143990
W18X8208969680
W18X8246895570
W18X8284921660
W18X8323047950
W18X8361274440
W18X8399601130
W18X8438028020
W18X8476555110
W18X8515182400
W18X8553909890
W18X8592737580
W18X8631665470
W18X8670693560
W18X8709821850
W18X8749050340
W18X8788379030
W18X8827807920
W18X8867337010
W18X8906966300
W18X8946695790
W18X8986525480
W18X9026455370
W18X9066485460
W18X9106615750
W18X9146846240
W18X9187176930
W18X9227607820
W18X9268138910
W18X9308770200
W18X9349501690
W18X9390333380
W18X9431265270
W18X9472297360
W18X9513429650
W18X9554662140
W18X9595994830
W18X9637427720
W18X9678960810
W18X9720594100
W18X9762327590
W18X9804161280
W18X9846095170
W18X9888129260
W18X9930263550
W18X9972498040
W18X10014832730
W18X10057267620
W18X10099802710
W18X10142438000
W18X10185173490
W18X10228009180
W18X10270945070
W18X10313981160
W18X10357117450
W18X10400353940
W18X10443690630
W18X10487127520
W18X10530664610
W18X10574301900
W18X10618039390
W18X10661877080
W18X10705814970
W18X10749853060
W18X10793991350
W18X10838229840
W18X10882568530
W18X10927007420
W18X10971546510
W18X11016185800
W18X11060925290
W18X11105764980
W18X11150704870
W18X11195744960
W18X11240885250
W18X11286125740
W18X11331466430
W18X11376907320
W18X11422448410
W18X11468089700
W18X11513831190
W18X11559672880
W18X11605614770
W18X11651656860
W18X11697799150
W18X11744041640
W18X11790384330
W18X11836827220
W18X11883370310
W18X11930013600
W18X11976757090
W18X12023600780
W18X12070544670
W18X12117588760
W18X12164733050
W18X12211977540
W18X12259322230
W18X12306767120
W18X12354312210
W18X12401957500
W18X12449702990
W18X12497548680
W18X12545494570
W18X12593540660
W18X12641686950
W18X12689933440
W18X12738280130
W18X12786727020
W18X12835274110
W18X12883921400
W18X12932668890
W18X12981516580
W18X13030464470
W18X13079512560
W18X13128660850
W18X13177909340
W18X13227258030
W18X13276706920
W18X13326256010
W18X13375905300
W18X13425654790
W18X13475504480
W18X13525454370
W18X13575504460
W18X13625654750
W18X13675905240
W18X13726255930
W18X13776706820
W18X13827257910
W18X13877909200
W18X13928660690
W18X13979512380
W18X14030464270
W18X14081516360
W18X14132668650
W18X14183921140
W18X14235273830
W18X14286726720
W18X14338279810
W18X14389933100
W18X14441686590
W18X14493540280
W18X14545494170
W18X14597548260
W18X14649702550
W18X14701957040
W18X14754311730
W18X14806766620
W18X14859321710
W18X14911977000
W18X14964732490
W18X15017588180
W18X15070544070
W18X15123600160
W18X15176756450
W18X15230012940
W18X15283369630
W18X15336826520
W18X15390383610
W18X15444040900
W18X15497798390
W18X15551656080
W18X15605613970
W18X15659672060
W18X15713830350
W18X15768088840
W18X15822447530
W18X15876906420
W18X15931465510
W18X15986124800
W18X16040884290
W18X16095743980
W18X16150703870
W18X16205763960
W18X16260924250
W18X16316184740
W18X16371545430
W18X16427006320
W18X16482567410
W18X16538228700
W18X16593990190
W18X16649851880
W18X16705813770
W18X16761875860
W18X16818038150
W18X16874300640
W18X16930663330
W18X16987126220
W18X17043689310
W18X17100352600
W18X17157116090
W18X17213979780
W18X17270943670
W18X17328007760
W18X17385172050
W18X17442436540
W18X17499801230
W18X17557266120
W18X17614831210
W18X17672496500
W18X17730261990
W18X17788127680
W18X17846093570
W18X17904159660
W18X17962325950
W18X18020592440
W18X18078959130
W18X18137426020
W18X18195993110
W18X18254660400
W18X18313427890
W18X18372295580
W18X18431263470
W18X18490331560
W18X18549499850
W18X18608768340
W18X18668137030
W18X18727605920
W18X18787175010
W18X18846844300
W18X18906613790
W18X18966483480
W18X19026453370
W18X19086523460
W18X19146693750
W18X19206964240
W18X19267334930
W18X19327805820
W18X19388376910
W18X19449048200
W18X19509819690
W18X19570691380
W18X19631663270
W18X19692735360
W18X19753907650
W18X19815180140
W18X19876552830
W18X19938025720
W18X19999598810
W18X20061272100
W18X20123045590
W18X20184919280
W18X20246893170
W18X20308967260
W18X20371141550
W18X20433416040
W18X20495790730
W18X20558265620
W18X20620840710
W18X20683516000
W18X20746291490
W18X20809167180
W18X20872143070
W18X20935219160
W18X20998395450
W18X21061671940
W18X21125048630
W18X21188525520
W18X21252102610
W18X21315779900
W18X21379557390
W18X21443435080
W18X21507412970
W18X21571491060
W18X21635669350
W18X21699947840
W18X21764326530
W18X21828805420
W18X21893384510
W18X21958063800
W18X22022843290
W18X22087722980
W18X22152702870
W18X22217782960
W18X22282963250
W18X22348243740
W18X22413624430
W18X22479105320
W18X22544686410
W18X22610367700
W18X22676149190
W18X22742030880
W18X22808012770
W18X22874094860
W18X22940277150
W18X23006559640
W18X23072942330
W18X23139425220
W18X23206008310
W18X23272691600
W18X23339475090
W18X23406358780
W18X23473342670
W18X23540426760
W18X23607611050
W18X23674895540
W18X23742280230
W18X23809765120
W18X23877350210
W18X23945035500
W18X24012820990
W18X24080706680
W18X24148692570
W18X24216778660
W18X24284964950
W18X24353251440
W18X24421638130
W18X24490125020
W18X24558712110
W18X24627399400
W18X24696186890
W18X24765074580
W18X24834062470
W18X24903150560
W18X24972338850
W18X25041627340
W18X25111016030
W18X25180504920
W18X25250094010
W18X25319783300
W18X25389572790
W18X25459462480
W18X25529452370
W18X25599542460
W18X25669732750
W18X25740023240
W18X25810413930
W18X25880904820
W18X25951495910
W18X26022187200
W18X26092978690
W18X26163870380
W18X26234862270
W18X26305954360
W18X26377146650
W18X26448439140
W18X26519831830
W18X26591324720
W18X26662917810
W18X26734611100
W18X26806404590
W18X26878298280
W18X26950292170
W18X27022386260
W18X27094580550
W18X27166875040
W18X27239269730
W18X27311764620
W18X27384359710
W18X27457055000
W18X27529850490
W18X27602746180
W18X27675742070
W18X27748838160
W18X27822034450
W18X27895330940
W18X27968727630
W18X28042224520
W18X28115821610
W18X28189518900
W18X28263316390
W18X28337214080
W18X28411211970
W18X28485310060
W18X28559508350
W18X28633806840
W18X28708205530
W18X28782704420
W18X28857303510
W18X28932002800
W18X29006802290
W18X29081701980
W18X29156701870
W18X29231801960
W18X29307002250
W18X29382302740
W18X29457703430
W18X29533204320
W18X29608805410
W18X29684506700
W18X29760308190
W18X29836209880
W18X29912211770
W18X29988313860
W18X30064516150
W18X30140818640
W18X30217221330
W18X30293724220
W18X30370327310
W18X30447030600
W18X30523834090
W18X30600737780
W18X30677741670
W18X30754845760
W18X30832050050
W18X30909354540
W18X30986759230
W18X31064264120
W18X31141869210
W18X31219574500
W18X31297379990
W18X31375285680
W18X31453291570
W18X31531397660
W18X31609603950
W18X31687910440
W18X31766317130
W18X31844824020
W18X31923431110
W18X32002138400
W18X32080945890
W18X32159853580
W18X32238861470
W18X32317969560
W18X32397177850
W18X32476486340
W18X32555895030
W18X32635403920
W18X32715013010
W18X32794722300
W18X32874531790
W18X32954441480
W18X33034451370
W18X33114561460
W18X33194771750
W18X33275082240
W18X33355492930
W18X33436003820
W18X33516614910
W18X33597326200
W18X33678137690
W18X33759049380
W18X33840061270
W18X33921173360
W18X34002385650
W18X34083698140
W18X34165110830
W18X34246623720
W18X34328236810
W18X34409950100
W18X34491763590
W18X34573677280
W18X34655691170
W18X34737805260
W18X34820019550
W18X34902334040
W18X34984748730
W18X35067263620
W18X35149878710
W18X35232594000
W18X35315409490
W18X35398325180
W18X35481341070
W18X35564457160
W18X35647673450
W18X35730989940
W18X35814406630
W18X35897923520
W18X35981540610
W18X36065257900
W18X36149075390
W18X36232993080
W18X36317010970
W18X36401129060
W18X36485347350
W18X36569665840
W18X36654084530
W18X36738603420
W18X36823222510
W18X36907941800
W18X36992761290
W18X37077680980
W18X37162700870
W18X37247820960
W18X37333041250
W18X37418361740
W18X37503782430
W18X37589303320
W18X37674924410
W18X37760645700
W18X37846467190
W18X37932388880
W18X38018410770
W18X38104532860
W18X38190755150
W18X38277077640
W18X38363500330
W18X38450023220
W18X38536646310
W18X38623369600
W18X38710193090
W18X38797116780
W18X38884140670
W18X38971264760
W18X39058489050
W18X39145813540
W18X39233238230
W18X39320763120
W18X39408388210
W18X39496113500
W18X39583938990
W18X39671864680
W18X39759890570
W18X39848016660
W18X39936242950
W18X40024569440
W18X40112996130
W18X40201523020
W18X40290150110
W18X40378877400
W18X40467704890
W18X40556632580
W18X40645660470
W18X40734788560
W18X40824016850
W18X40913345340
W18X41002774030
W18X41092302920
W18X41181932010
W18X41271661300
W18X41361490790
W18X41451420480
W18X41541450370
W18X41631580460
W18X41721810750
W18X41812141240
W18X41902571930
W18X41993102820
W18X42083733910
W18X42174465200
W18X42265296690
W18X42356228380
W18X42447260270
W18X42538392360
W18X42629624650
W18X42720957140
W18X42812389830
W18X42903922720
W18X42995555810
W18X43087289100
W18X43179122590
W18X43271056280
W18X43363090170
W18X43455224260
W18X43547458550
W18X43639793040
W18X43732227730
W18X43824762620
W18X43917397710
W18X44010133000
W18X44102968490
W18X44195904180
W18X44288940070
W18X44382076160
W18X44475312450
W18X44568648940
W18X44662085630
W18X44755622520
W18X44849259610
W18X44942996900
W18X45036834390
W18X45130772080
W18X45224809970
W18X45318948060
W18X45413186350
W18X45507524840
W18X45601963530
W18X45696502420
W18X45791141510
W18X45885880800
W18X45980720290
W18X46075659980
W18X46170699870
W18X46265839960
W18X46361080250
W18X46456420740
W18X46551861430
W18X46647402320
W18X46743043410
W18X46838784700
W18X46934626190
W18X47030567880
W18X47126609770
W18X47222751860
W18X47318994150
W18X47415336640
W18X47511779330
W18X47608322220
W18X47704965310
W18X47801708600
W18X47898552090
W18X47995495780
W18X48092539670
W18X48189683760
W18X48286928050
W18X48384272540
W18X48481717230
W18X48579262120
W18X48676907210
W18X48774652500
W18X48872497990
W18X48970443680
W18X49068489570
W18X49166635660
W18X49264881950
W18X49363228440
W18X49461675130
W18X49560222020
W18X49658869110
W18X49757616400
W18X49856463890
W18X49955411580
W18X50054459470
W18X50153607560
W18X50252855850
W18X50352204340
W18X50451653030
W18X50551201920
W18X50650851010
W18X50750600300
W18X50850449790
W18X50950399480
W18X51050449370
W18X51150599460
W18X51250849750
W18X51351200240
W18X51451650930
W18X51552201820
W18X51652852910
W18X51753604200
W18X51854455690
W18X51955407380
W18X52056459270
W18X52157611360
W18X52258863650
W18X52360216140
W18X52461668830
W18X52563221720
W18X52664874810
W18X52766628100
W18X52868481590
W18X52970435280
W18X53072489170
W18X53174643260
W18X53276897550
W18X53379252040
W18X53481706730
W18X53584261620
W18X53686916710
W18X53789672000
W18X53892527490
W18X53995483180
W18X54098539070
W18X54201695160
W18X54304951450
W18X54408307940
W18X54511764630
W18X54615321520
W18X54718978610
W18X54822735900
W18X54926593390
W18X55030551080
W18X55134608970
W18X55238767060
W18X55343025350
W18X55447383840
W18X55551842530
W18X55656401420
W18X55761060510
W18X55865819800
W18X55970679290
W18X56075638980
W18X56180698870
W18X56285858960
W18X56391119250
W18X56496479740
W18X56601940430
W18X56707501320
W18X56813162410
W18X56918923700
W18X57024785190
W18X57130746880
W18X57236808770
W18X57342970860
W18X57449233150
W18X57555595640
W18X57662058330
W18X57768621220
W18X57875284310
W18X57982047600
W18X58088911090
W18X58195874780
W18X58302938670
W18X58410102760
W18X58517367050
W18X58624731540
W18X58732196230
W18X58839761120
W18X58947426210
W18X59055191500
W18X59163056990
W18X59271022680
W18X59379088570
W18X59487254660
W18X59595520950
W18X59703887440
W18X59812354130
W18X59920921020
W18X60029588110
W18X60138355400
W18X60247222890
W18X60356190580
W18X60465258470
W18X60574426560
W18X60683694850
W18X60793063340
W18X60902532030
W18X61012100920
W18X61121770010
W18X61231539300
W18X61341408790
W18X61451378480
W18X61561448370
W18X61671618460
W18X61781888750
W18X61892259240
W18X62002729930
W18X62113300820
W18X62223971910
W18X62334743200
W18X62445614690
W18X62556586380
W18X62667658270
W18X62778830360
W18X62890102650
W18X63001475140
W18X63112947830
W18X63224520720
W18X63336193810
W18X63447967100
W18X63559840590
W18X63671814280
W18X63783888170
W18X63896062260
W18X64008336550
W18X64120711040
W18X64233185730
W18X64345760620
W18X64458435710
W18X64571211000
W18X64684086490
W18X64797062180
W18X64910138070
W18X65023314160
W18X65136590450
W18X65249966940
W18X65363443630
W18X65477020520
W18X65590697610
W18X65704474900
W18X65818352390
W18X65932330080
W18X66046407970
W18X66160586060
W18X66274864350
W18X66389242840
W18X66503721530
W18X66618300420
W18X66732979510
W18X66847758800
W18X66962638290
W18X67077617980
W18X67192697870
W18X67307877960
W18X67423158250
W18X67538538740
W18X67654019430
W18X67769600320
W18X67885281410
W18X68000962700
W18X68116744190
W18X68232625880
W18X68348607770
W18X68464689860
W18X68580872150
W18X68697154640
W18X68813537330
W18X68930020220
W18X69046603310
W18X69163286600
W18X69280070090
W18X69396953780
W18X69513937670
W18X69631021760
W18X69748206050
W18X69865490540
W18X69982875230
W18X70100360120
W18X70217945210
W18X70335630500
W18X70453415990
W18X70571301680
W18X70689287570
W18X70807373660
W18X70925559950
W18X71043846440
W18X71162233130
W18X71280720020
W18X71399307110
W18X71517994400
W18X71636781890
W18X71755669580
W18X71874657470
W18X71993745560
W18X72112933850
W18X72232222340
W18X72351611030
W18X72471099920
W18X72590689010
W18X72710378300
W18X72830167790
W18X72950057480
W18X73070047370
W18X73190137460
W18X73310327750
W18X73430618240
W18X73551008930
W18X73671499820
W18X73792090910
W18X73912782200
W18X74033573690
W18X74154465380
W18X74275457270
W18X74396549360
W18X74517741650
W18X74639034140
W18X74760426830
W18X74881919720
W18X75003512810
W18X75125206100
W18X75246999590
W18X75368893280
W18X75490887170
W18X75612981260
W18X75735175550
W18X75857470040
W18X75979864730
W18X76102359620
W18X76224954710
W18X76347650000
W18X76470445490
W18X76593341180
W18X76716337070
W18X76839433160
W18X76962629450
W18X77085925940
W18X77209322630
W18X77332819520
W18X77456416610
W18X77580113900
W18X77703911390
W18X77827809080
W18X77951806970
W18X78075905060
W18X78200103350
W18X78324401840
W18X78448800530
W18X78573299420
W18X78697898510
W18X78822597800
W18X78947397290
W18X79072296980
W18X79197296870
W18X79322396960
W18X79447597250
W18X79572897740
W18X79698298430
W18X79823799320
W18X79949400410
W18X80075101700
W18X80200903190
W18X80326804880
W18X80452806770
W18X80578908860
W18X80705111150
W18X80831413640
W18X80957816330
W18X81084319220
W18X81210922310
W18X81337625600
W18X81464429090
W18X81591332780
W18X81718336670
W18X81845440760
W18X81972645050
W18X82099949540
W18X82227354230
W18X82354859120
W18X82482464210
W18X82610169500
W18X82737974990
W18X82865880680
W18X82993886570
W18X83121992660
W18X83250198950
W18X83378505440
W18X83506912130
W18X83635419020
W18X83764026110
W18X83892733400
W18X84021540890
W18X84150448580
W18X84279456470
W18X84408564560
W18X84537772850
W18X84667081340
W18X84796490030
W18X84925998920
W18X85055608010
W18X85185317300
W18X85315126790
W18X85445036480
W18X85575046370
W18X85705156460
W18X85835366750
W18X85965677240
W18X86096087930
W18X86226598820
W18X86357209910
W18X86487921200
W18X86618732690
W18X86749644380
W18X86880656270
W18X87011768360
W18X87142980650
W18X87274293140
W18X87405705830
W18X87537218720
W18X87668831810
W18X87800545100
W18X87932358590
W18X88064272280
W18X88196286170
W18X88328400260
W18X88460614550
W18X88592929040
W18X88725343730
W18X88857858620
W18X88990473710
W18X89123189000
W18X89256004490
W18X89388920180
W18X89521936070
W18X89655052160
W18X89788268450
W18X89921584940
W18X90055001630
W18X90188518520
W18X90322135610
W18X90455852900
W18X90589670390
W18X90723588080
W18X90857605970
W18X90991724060
W18X91125942350
W18X91260260840
W18X91394679530
W18X91529198420
W18X91663817510
W18X91798536800
W18X91933356290
W18X92068275980
W18X92203295870
W18X92338415960
W18X92473636250
W18X92608956740
W18X92744377430
W18X92879898320
W18X93015519410
W18X93151240700
W18X93287062190
W18X93422983880
W18X93559005770
W18X93695127860
W18X93831350150
W18X93967672640
W18X94104095330
W18X94240618220
W18X94377241310
W18X94513964600
W18X94650788090
W18X94787711780
W18X94924735670
W18X95061859760
W18X95199084050
W18X95336408540
W18X95473833230
W18X95611358120
W18X95748983210
W18X95886708500
W18X96024533990
W18X96162459680
W18X96300485570
W18X96438611660
W18X96576837950
W18X96715164440
W18X96853591130
W18X96992118020
W18X97130745110
W18X97269472400
W18X97408299890
W18X97547227580
W18X97686255470
W18X97825383560
W18X97964611850
W18X98103940340
W18X98243369030
W18X98382897920
W18X98522527010
W18X98662256300
W18X98802085790
W18X98942015480
W18X99082045370
W18X99222175460
W18X99362405750
W18X99502736240
W18X99643166930
W18X99783697820
W18X99924328910
W18X100065060200
W18X100205891690
W18X100346823380
W18X100487855270
W18X100628987360
W18X100770219650
W18X100911552140
W18X101052984830
W18X101194517720
W18X101336150810
W18X101477884100
W18X101619717590
W18X101761651280
W18X101903685170
W18X102045819260
W18X102188053550
W18X102330388040
W18X102472822730
W18X102615357620
W18X102757992710
W18X102900728000
W18X103043563490
W18X103186499180
W18X103329535070
W18X103472671160
W18X103615907450
W18X103759243940
W18X103902680630
W18X104046217520
W18X104189854610
W18X104333591900
W18X104477429390
W18X104621367080
W18X104765404970
W18X104909543060
W18X105053781350
W18X105198119840
W18X105342558530
W18X105487097420
W18X105631736510
W18X105776475800
W18X105921315290
W18X106066254980
W18X106211294870
W18X106356434960
W18X106501675250
W18X106647015740
W18X106792456430
W18X106937997320
W18X107083638410
W18X107229379700
W18X107375221190
W18X107521162880
W18X107667204770
W18X107813346860
W18X107959589150
W18X108105931640
W18X108252374330
W18X108398917220
W18X108545560310
W18X108692303600
W18X108839147090
W18X108986090780
W18X109133134670
W18X109280278760
W18X109427523050
W18X109574867540
W18X109722312230
W18X109869857120
W18X110017502210
W18X110165247500
W18X110313092990
W18X110461038680
W18X110609084570
W18X110757230660
W18X110905476950
W18X111053823440
W18X111202270130
W18X111350817020
W18X111499464110
W18X111648211400
W18X111797058890
W18X111946006580
W18X112095054470
W18X112244202560
W18X112393450850
W18X112542799340
W18X112692248030
W18X112841796920
W18X112991446010
W18X113141195300
W18X113291044790
W18X113440994480
W18X113591044370
W18X113741194460
W18X113891444750
W18X114041795240
W18X114192245930
W18X114342796820
W18X114493447910
W18X114644199200
W18X114795050690
W18X114946002380
W18X115097054270
W18X115248206360
W18X115399458650
W18X115550811140
W18X115702263830
W18X115853816720
W18X116005469810
W18X116157223100
W18X116309076590
W18X116461030280
W18X116613084170
W18X116765238260
W18X116917492550
W18X117069847040
W18X117222301730
W18X117374856620
W18X117527511710
W18X117680267000
W18X117833122490
W18X117986078180
W18X118139134070
W18X118292290160
W18X118445546450
W18X118598902940
W18X118752359630
W18X118905916520
W18X119059573610
W18X119213330900
W18X119367188390
W18X119521146080
W18X119675203970
W18X119829362060
W18X119983620350
W18X120137978840
W18X120292437530
W18X120446996420
W18X120601655510
W18X120756414800
W18X120911274290
W18X121066233980
W18X121221293870
W18X121376453960
W18X121531714250
W18X121687074740
W18X121842535430
W18X121998096320
W18X122153757410
W18X122309518700
W18X122465380190
W18X122621341880
W18X122777403770
W18X122933565860
W18X123089828150
W18X123246190640
W18X123402653330
W18X123559216220
W18X123715879310
W18X123872642600
W18X124029506090
W18X124186469780
W18X124343533670
W18X124500697760
W18X124657962050
W18X124815326540
W18X124972791230
W18X125130356120
W18X125288021210
W18X125445786500
W18X125603651990
W18X125761617680
W18X125919683570
W18X126077849660
W18X126236115950
W18X126394482440
W18X126552949130
W18X126711516020
W18X126870183110
W18X127028950400
W18X127187817890
W18X127346785580
W18X127505853470
W18X127665021560
W18X127824289850
W18X127983658340
W18X128143127030
W18X128302695920
W18X128462365010
W18X128622134300
W18X128782003790
W18X128941973480
W18X129102043370
W18X129262213460
W18X129422483750
W18X129582854240
W18X129743324930
W18X129903895820
W18X130064566910
W18X130225338200
W18X130386209690
W18X130547181380
W18X130708253270
W18X130869425360
W18X131030697650
W18X131192070140
W18X131353542830
W18X131515115720
W18X131676788810
W18X131838562100
W18X132000435590
W18X132162409280
W18X132324483170
W18X132486657260
W18X132648931550
W18X132811306040
W18X132973780730
W18X133136355620
W18X133299030710
W18X133461806000
W18X133624681490
W18X133787657180
W18X133950733070
W18X134113909160
W18X134277185450
W18X134440561940
W18X134604038630
W18X134767615520
W18X134931292610
W18X135095069900
W18X135258947390
W18X135422925080
W18X135587002970
W18X135751181060
W18X135915459350
W18X136079837840
W18X136244316530
W18X136408895420
W18X136573574510
W18X136738353800
W18X136903233290
W18X137068212980
W18X137233292870
W18X137398472960
W18X137563753250
W18X137729133740
W18X137894614430
W18X138060195320
W18X138225876410
W18X138391657700
W18X138557539190
W18X138723520880
W18X138889602770
W18X139055784860
W18X139222067150
W18X139388449640
W18X139554932330
W18X139721515220
W18X139888198310
W18X140054981600
W18X140221865090
W18X140388848780
W18X140555932670
W18X140723116760
W18X140890401050
W18X141057785540
W18X141225270230
W18X141392855120
W18X141560540210
W18X141728325500
W18X141896210990
W18X142064196680
W18X142232282570
W18X142400468660
W18X142568754950

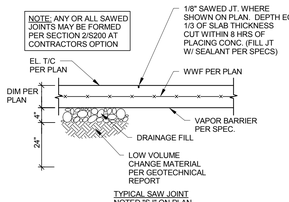

1 SECTION
3/4" = 1'-0"

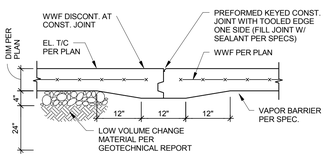

2 SECTION
3/4" = 1'-0"

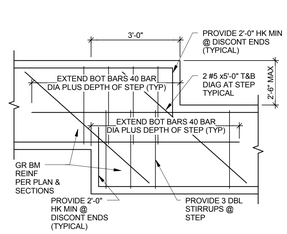

3 SECTION
1/2" = 1'-0"

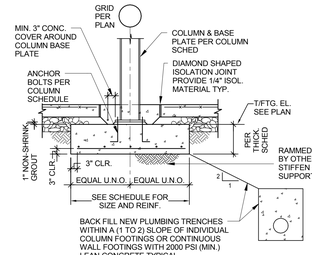

4 SECTION
1/2" = 1'-0"

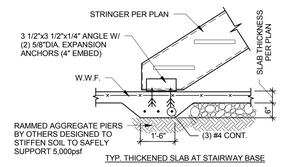

5 SECTION
3/4" = 1'-0"

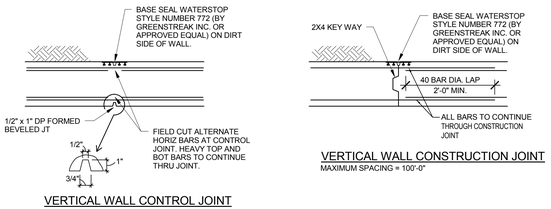

VERTICAL WALL CONTROL JOINT
MAXIMUM SPACING = 25'-0"
(COORDINATE LOCATIONS WITH ARCHITECT/ ALIGN WITH MASONRY CONTROL/EXPANSION JOINTS ABOVE)

6 VERTICAL WALL CONTROL JOINT
3/4" = 1'-0"

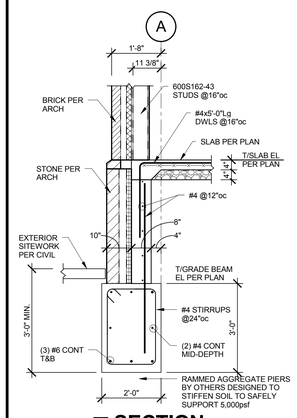

7 SECTION
1/2" = 1'-0"

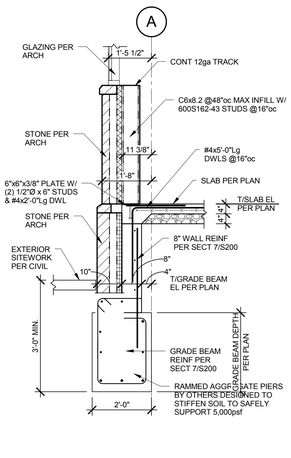

8 SECTION
1/2" = 1'-0"

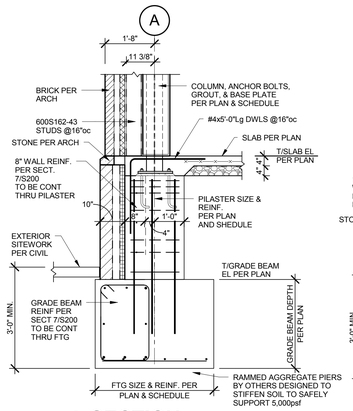

9 SECTION
1/2" = 1'-0"

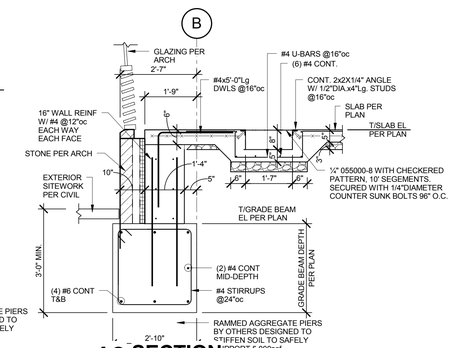

10 SECTION
1/2" = 1'-0"

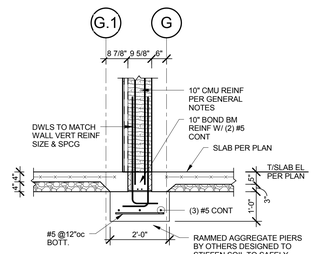

11 SECTION
1/2" = 1'-0"

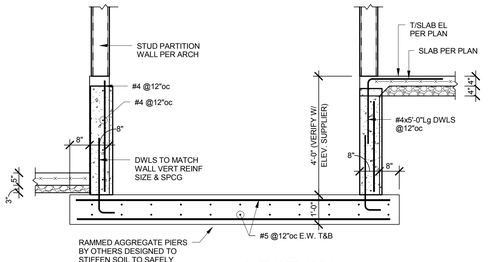

13 SECTION
1/2" = 1'-0"

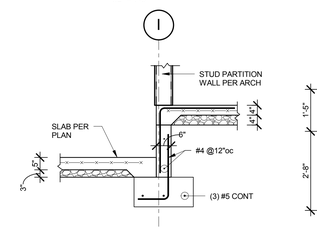

12 SECTION
1/2" = 1'-0"

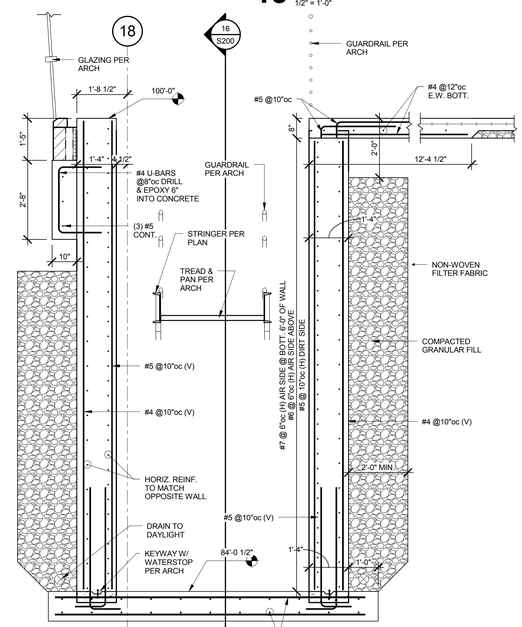

14 SECTION
1/2" = 1'-0"

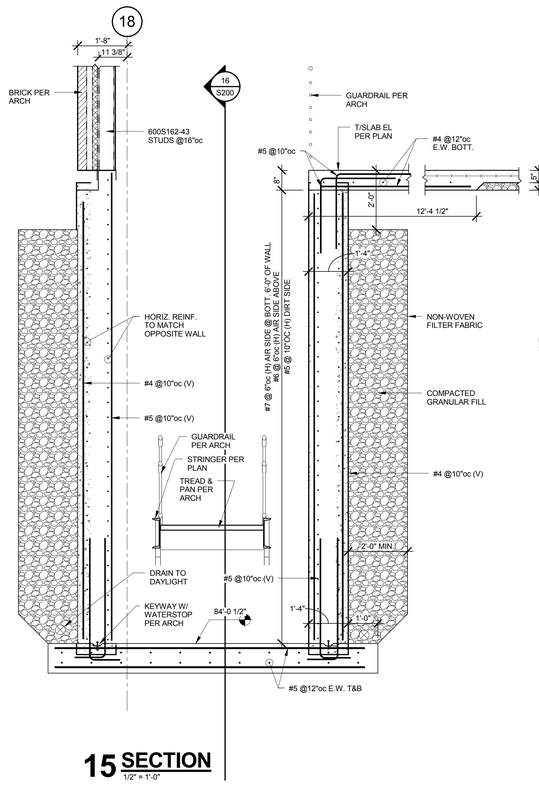

15 SECTION
1/2" = 1'-0"

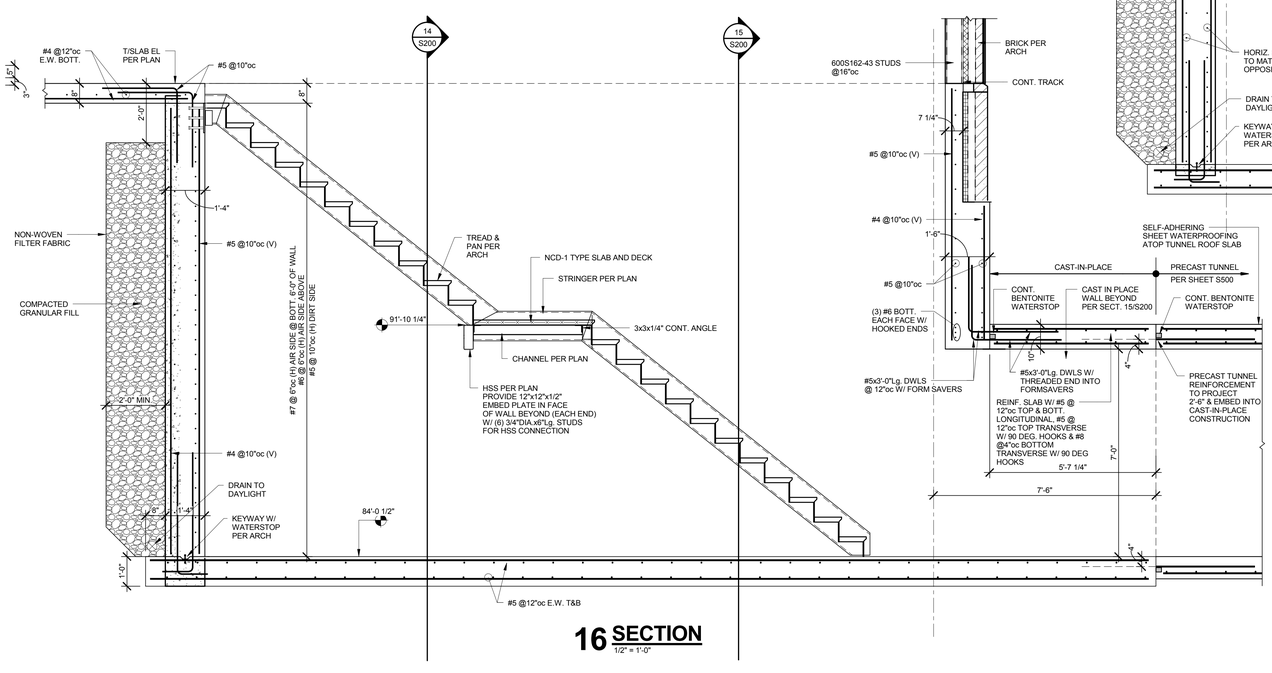

16 SECTION
1/2" = 1'-0"

HTK ARCHITECTS PA
900 S. KANSAS AVE., SUITE 200 TOPEKA, KANSAS 66612
9300 W 110TH ST. STE 160 OVERLAND PARK, KANSAS 66210
T 785.296.8899 F 785.296.3456
www.htkarchitects.com



DATE:
- 4-15-15

REVISED DATE:
- 12-18-14
- 2-9-15
- 3-10-15
-

HTK PROJECT NUMBER:
- 1410.03

Department of Administration
Office of Facilities and
Procurement Management
800 SW Jackson Street, Suite 700
Topeka, Kansas 66612-1216
Phone 785-296-8899
FAX 785-296-3456

STATE OF KANSAS
STATE OF KANSAS ENERGY & SERVICE CENTER
221 SW 7th Street
BUILDING NUMBER 17300-0038

DATE: 4-15-15 DRAWN BY: Author CHECKED BY: Checker REV:

FOUNDATION SECTIONS

A-012651

S200

CONSTRUCTION DOCUMENTS

4/16/2015 12:03:40 PM U:\Clients H-J\HTK Projects\HTK1408 - Kansas Energy\HTK1408 Dwgs\HTK1408 -S15- Kansas Energy_CLARK.rvt

JCSBC
2-2-2016
Att.9G.--0055

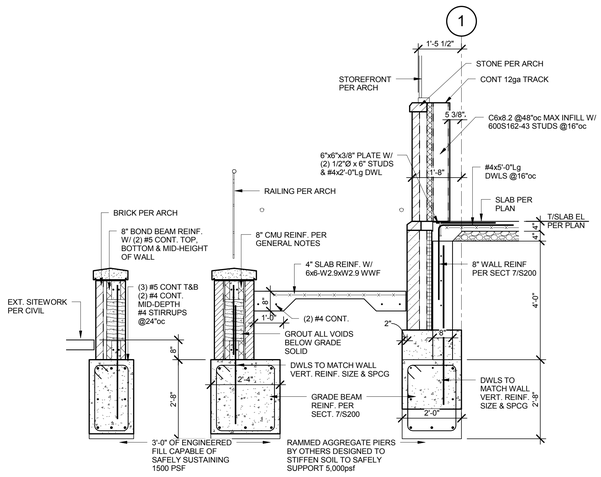

1 SECTION
1/2" = 1'-0"

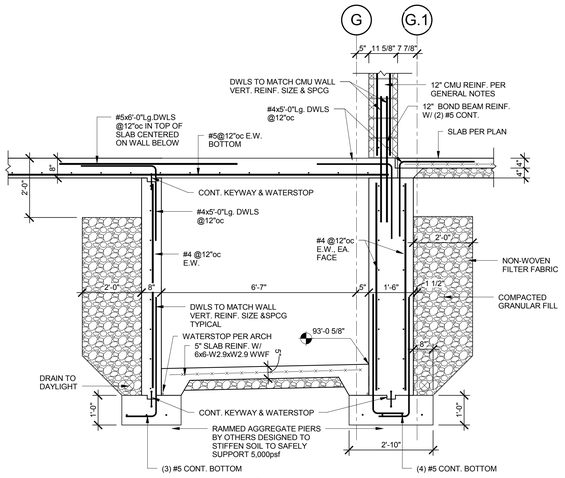

2 SECTION
1/2" = 1'-0"

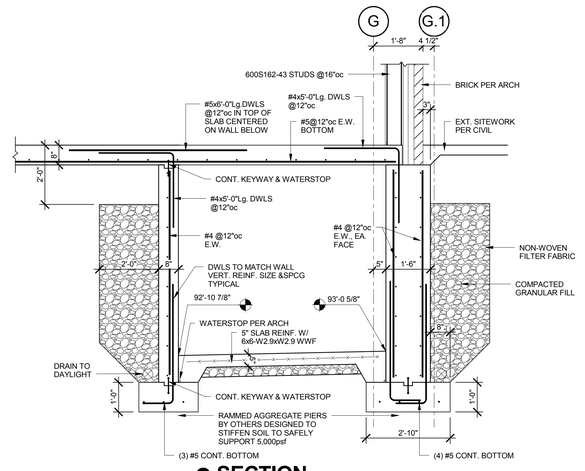

3 SECTION
1/2" = 1'-0"

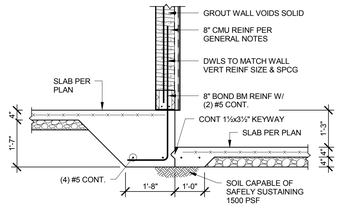

4 SECTION
1/2" = 1'-0"

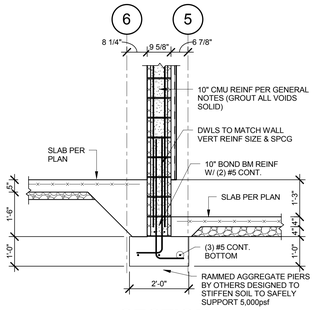

5 SECTION
1/2" = 1'-0"

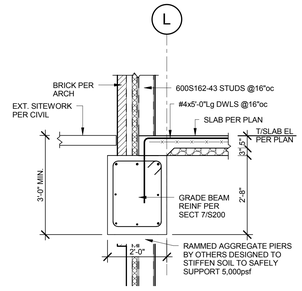

6 SECTION
1/2" = 1'-0"

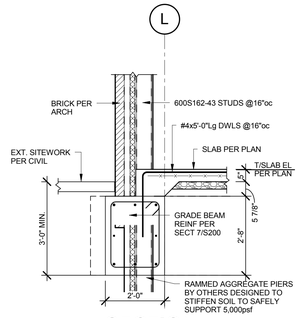

7 SECTION
1/2" = 1'-0"

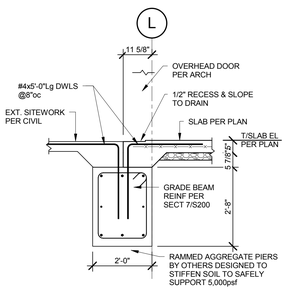

8 SECTION
1/2" = 1'-0"

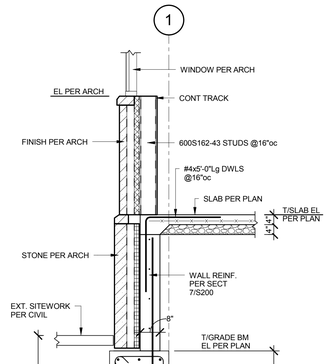

9 SECTION
1/2" = 1'-0"

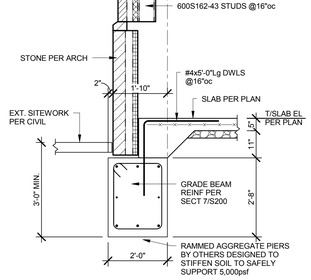

10 SECTION
1/2" = 1'-0"

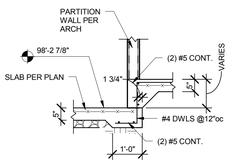

11 SECTION
1/2" = 1'-0"

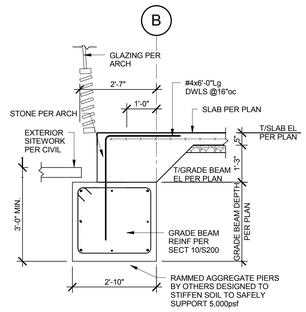

12 SECTION
1/2" = 1'-0"

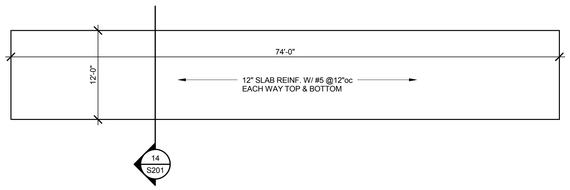

13 FUEL STORAGE TANK FOUNDATION PLAN
1/8" = 1'-0"

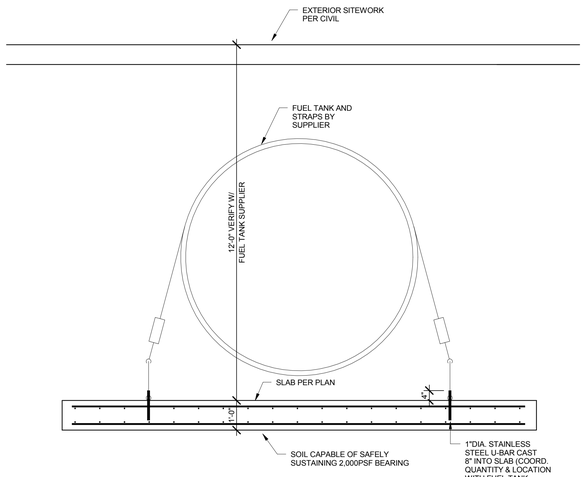

14 SECTION
1/2" = 1'-0"

HTK ARCHITECTS PA
900 S. KANSAS AVE., SUITE 200 TOPEKA KANSAS 66612
9300 W 110TH ST. STE 160 OVERLAND PARK, KANSAS 66210
T 785.640.0202 F 785.640.0270
www.htkarchitects.com
T 913.663.5775

DATE:
- 4-15-15

REVISED DATE:
- 12-18-14
- 2-9-15
- 3-10-15
-

HTK PROJECT NUMBER:
- 1410.03

Department of Administration
Office of Facilities and Procurement Management
800 SW Jackson Suite 1300
Topeka, Kansas 66612-1216
Phone 785-296-8899
FAX 785-296-3456

STATE OF KANSAS
STATE OF KANSAS ENERGY & SERVICE CENTER
221 SW 7th Street
BUILDING NUMBER 17300-0038
DRAWN BY: Author CHECKED BY: Checker REV:
DATE: 4-15-15

FOUNDATION SECTIONS

A-012651

S201

CONSTRUCTION DOCUMENTS

4/16/2015 12:03:41 PM U:\Clients H-J\HTK Projects\HTK1408 - Kansas Energy\HTK1408 Dwgs\HTK1408 -S15- Kansas Energy_CLARK.rvt

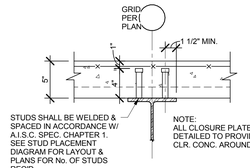

1 TYPICAL COMPOSITE BEAM
1 1/2" = 1'-0"

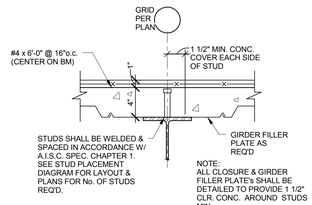

2 TYPICAL COMPOSITE GIRDER
1 1/2" = 1'-0"

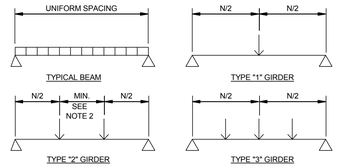

1. ALL DIAGRAMS REPRESENT IDEALIZED CONDITIONS. ACTUAL FRAMING CONFIGURATIONS MAY REQUIRE ADDITIONAL INTERPRETATION.
2. MAXIMUM SPACING OF STUDS SHALL BE 36"o.c. IF STUD SPACING EXCEEDS 12" O.C. PROVIDE 5/8" DIA. PUDDLE WELD ATTACHMENT SUCH THAT THE MAXIMUM AVERAGE SPACING OF STUD/WELD ATTACHMENTS IS 12"o.c., AND MAXIMUM SPACING BETWEEN ATTACHMENTS IS 18".
3. THE NUMBER OF STUDS PER BEAM SHOWN ON THE DRAWINGS IS BASED ON AN ASSUMED DESIGN VALUE OF 13.3 KIPS/STUD. THE ACTUAL NUMBER OF STUDS PER BEAM [N] MAY VARY BASED ON RIB WIDTH, DECK DEPTH, NUMBER OF STUDS PER CELL, DECK RIB ORIENTATION, ETC. AS PER AISC SPECIFICATIONS FOR COMPOSITE CONSTRUCTION. METAL DECK CONTRACTOR SHALL SUBMIT ALL CALCULATIONS VERIFYING THE HORIZONTAL SHEAR CAPACITY OF SHEAR STUDS DETAILED ON SHOP DRAWINGS AND PROVIDE THE STUDS REQUIRED.
4. SHEAR CONNECTOR PLACEMENT SHALL BE FULLY DETAILED ON THE METAL DECK SHOP DRAWINGS.

3 TYPICAL SHEAR STUD PLACEMENT DETAIL
3/4" = 1'-0"

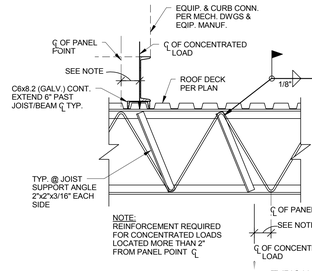

TYPICAL RTU CURB SUPPORT FRAMING

4 SECTION
3/4" = 1'-0"

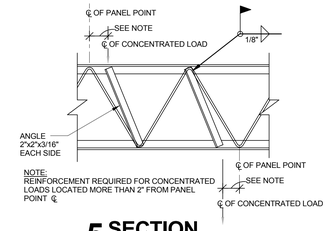

5 SECTION
3/4" = 1'-0"

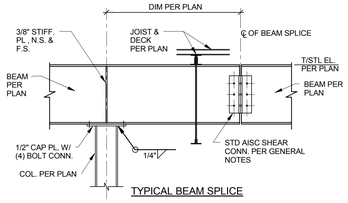

TYPICAL BEAM SPLICE

6 SECTION
3/4" = 1'-0"

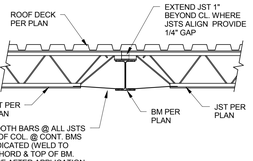

7 SECTION
3/4" = 1'-0"

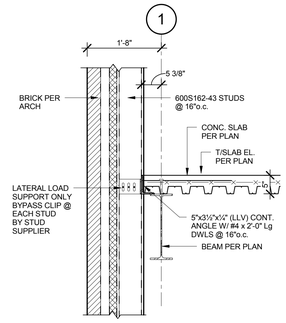

8 SECTION
3/4" = 1'-0"

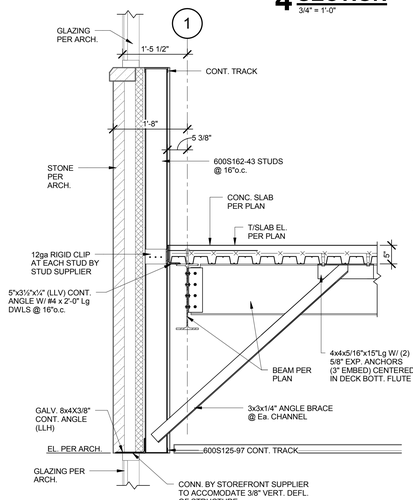

9 SECTION
3/4" = 1'-0"

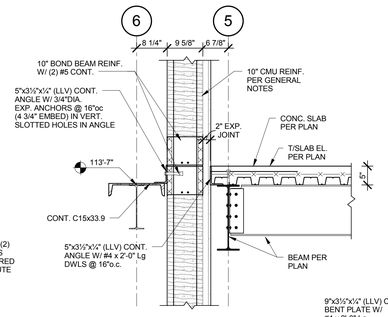

10 SECTION
3/4" = 1'-0"

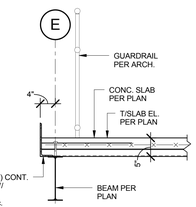

11 SECTION
3/4" = 1'-0"

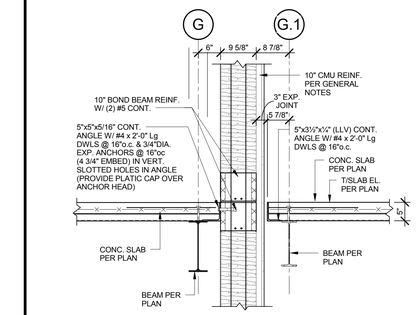

12 SECTION
3/4" = 1'-0"

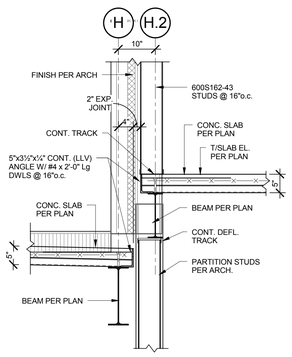

13 SECTION
3/4" = 1'-0"

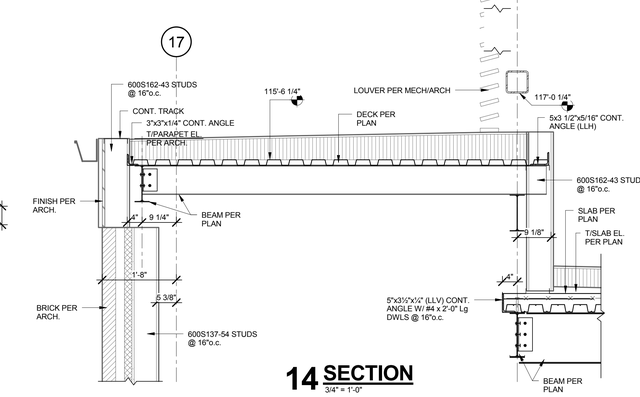

14 SECTION
3/4" = 1'-0"

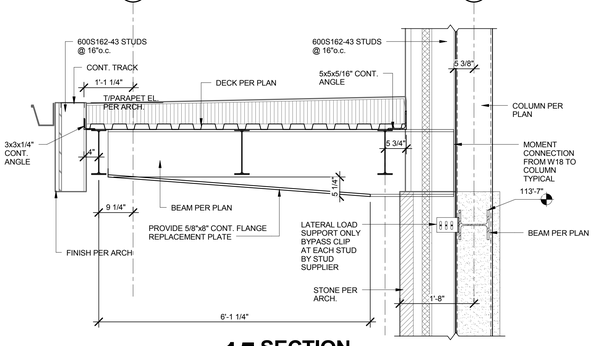

15 SECTION
3/4" = 1'-0"

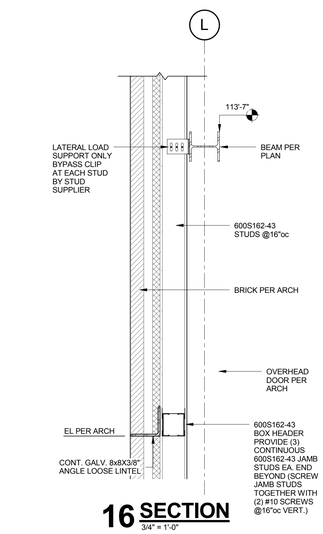

16 SECTION
3/4" = 1'-0"

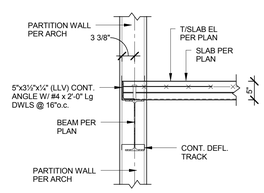

17 SECTION
3/4" = 1'-0"

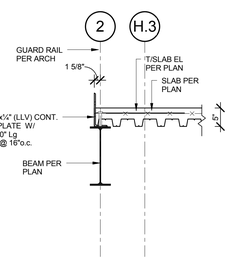

18 SECTION
3/4" = 1'-0"

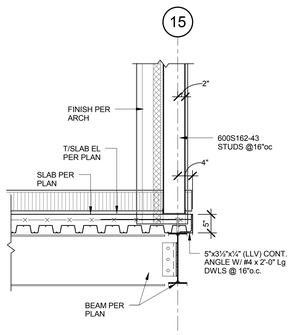

19 SECTION
3/4" = 1'-0"

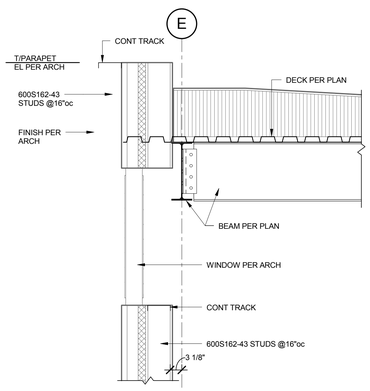

20 SECTION
3/4" = 1'-0"

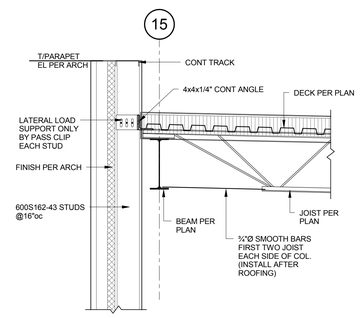

21 SECTION
3/4" = 1'-0"

HTK ARCHITECTS PA
900 S. KANSAS AVE., SUITE 200 9300 W 110TH ST. STE 160
TOPEKA, KANSAS 66612 OVERLAND PARK, KANSAS 66210
T 785.296.8899 F 913.663.5379
www.htkarchitects.com

DATE:
- 4-15-15

REVISED DATE:
- 12-18-14
- 2-9-15
- 3-10-15
-

HTK PROJECT NUMBER:
- 1410.03

Department of Administration
Office of Facilities and
Procurement Management
800 SW Jackson Street, Suite 700
Topeka, Kansas 66612-1216
Phone 785-296-8899
FAX 785-296-3456

STATE OF KANSAS
STATE OF KANSAS ENERGY & SERVICE CENTER
221 SW 7th Street
BUILDING NUMBER 17300-0038

DATE: 4-15-15 DRAWN BY: Author CHECKED BY: Checker REV:

FRAMING SECTIONS

A-012651

S300

CONSTRUCTION DOCUMENTS

JCSBC
2-2-2016
Att 9G - 0057

4/16/2015 12:03:42 PM U:\Clients H-J\HTK Projects\HTK1408 - Kansas Energy\HTK1408 Dwgs\HTK1408 - S15- Kansas Energy_CLARK.rvt

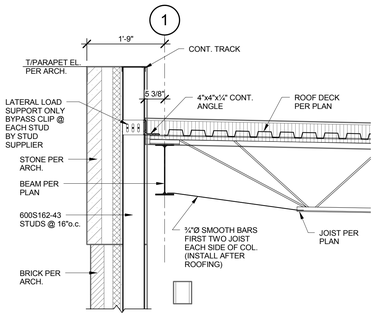

1 SECTION
3/4" = 1'-0"

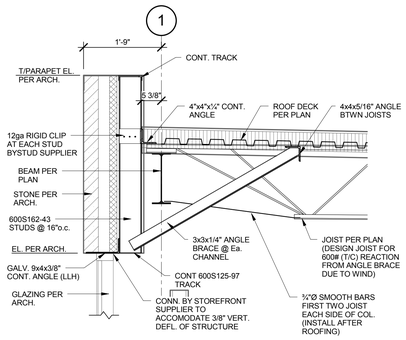

2 SECTION
3/4" = 1'-0"

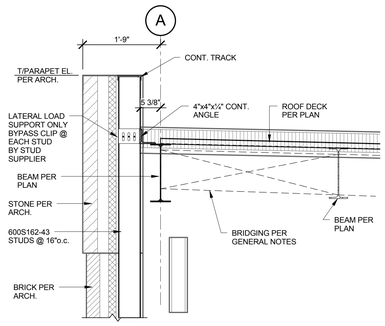

3 SECTION
3/4" = 1'-0"

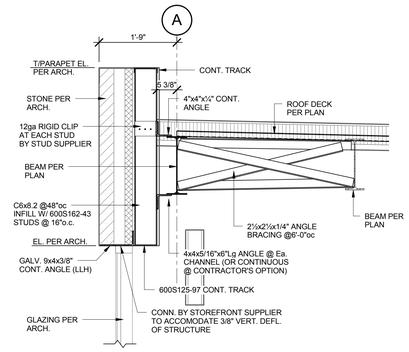

4 SECTION
3/4" = 1'-0"

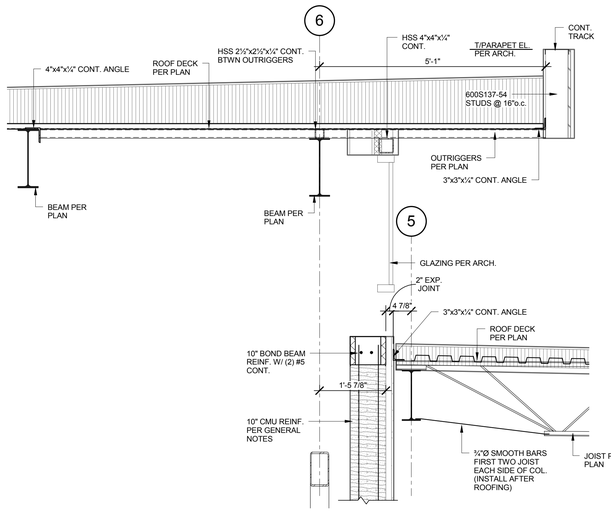

5 SECTION
3/4" = 1'-0"

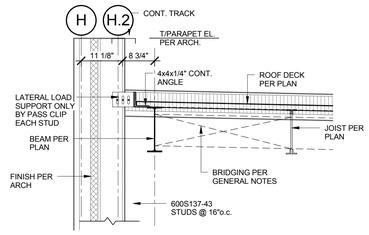

6 SECTION
3/4" = 1'-0"

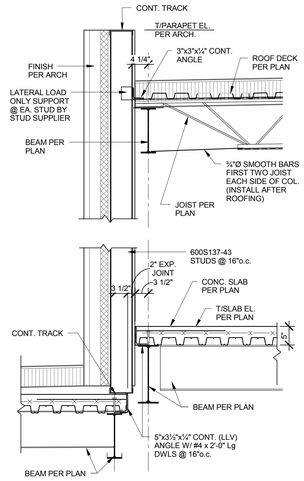

7 SECTION
3/4" = 1'-0"

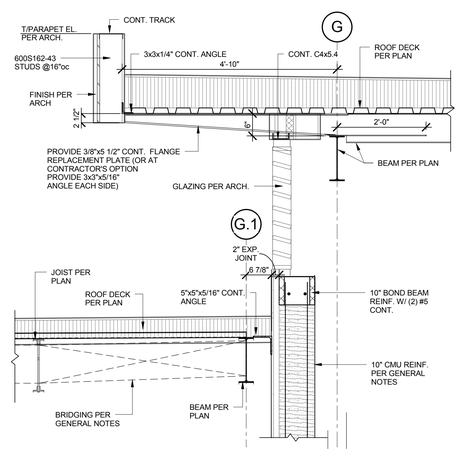

8 SECTION
3/4" = 1'-0"

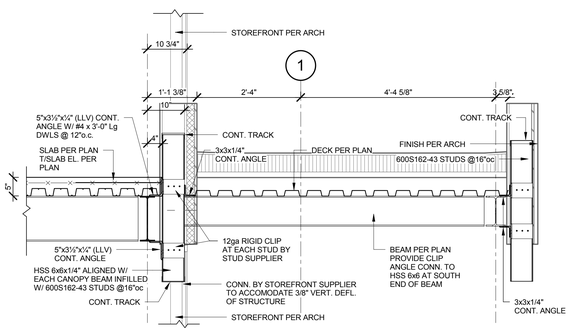

9 SECTION
3/4" = 1'-0"

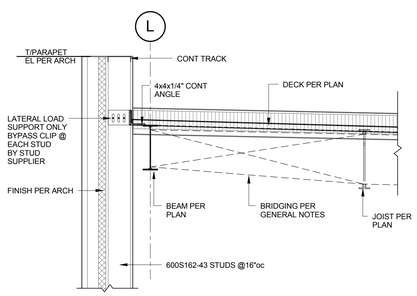

10 SECTION
3/4" = 1'-0"

HTK ARCHITECTS PA
900 S. KANSAS AVE., SUITE 200 TOPEKA, KANSAS 66612
T 785.640.0102 F 785.640.0170
9300 W 110TH ST. STE. 160 OVERLAND PARK, KANSAS 66210
T 913.663.4333
www.htkarchitects.com

ANDREW WASHBURN 2005 REGISTERED ARCHITECT PROFESSIONAL ENGINEER

DATE:
- 4-15-15

REVISED DATE:
- 12-18-14
- 2-9-15
- 3-10-15
-

HTK PROJECT NUMBER:
- 1410.03

Department of Administration
Office of Facilities and
Procurement Management
800 SW Jackson Street, Suite 1300
Topeka, Kansas 66612-1216
Phone 785-296-3899
FAX 785-296-3456

STATE OF KANSAS
STATE OF KANSAS ENERGY & SERVICE CENTER
221 SW 7th Street
BUILDING NUMBER 17300-0038

DATE: 4-15-15 DRAWN BY: Author CHECKED BY: Checker REV:

FRAMING SECTIONS

A-012651

S301

CONSTRUCTION DOCUMENTS

4/16/2015 12:03:42 PM U:\Clients H-J\HTK Projects\HTK1408 - Kansas Energy\HTK1408 Dwgs\HTK1408 -S15- Kansas Energy_CLARK.rvt

JCSBC
2-2-2016
Att.9G.--0058

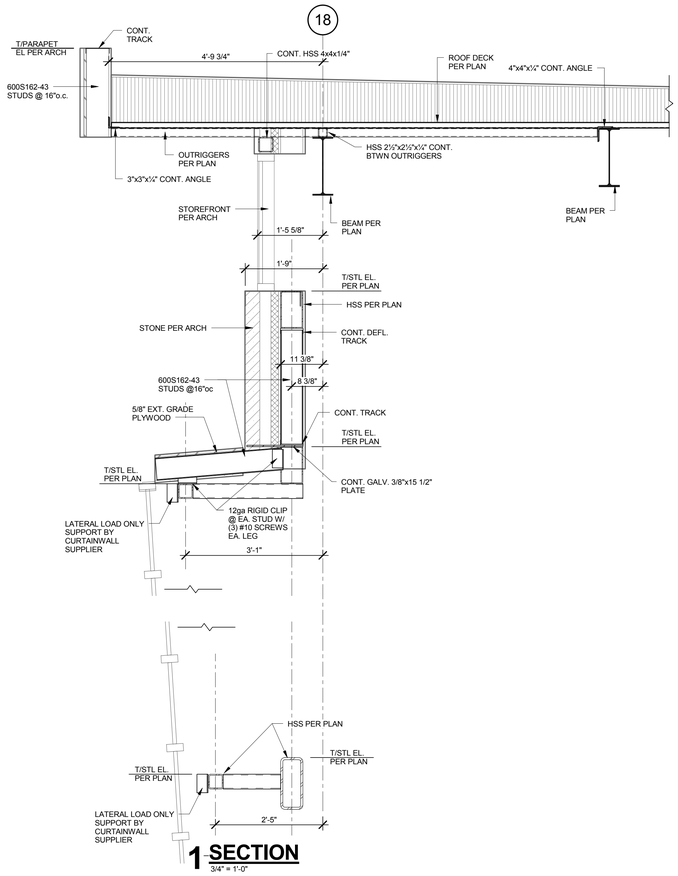

1 SECTION
3/4" = 1'-0"

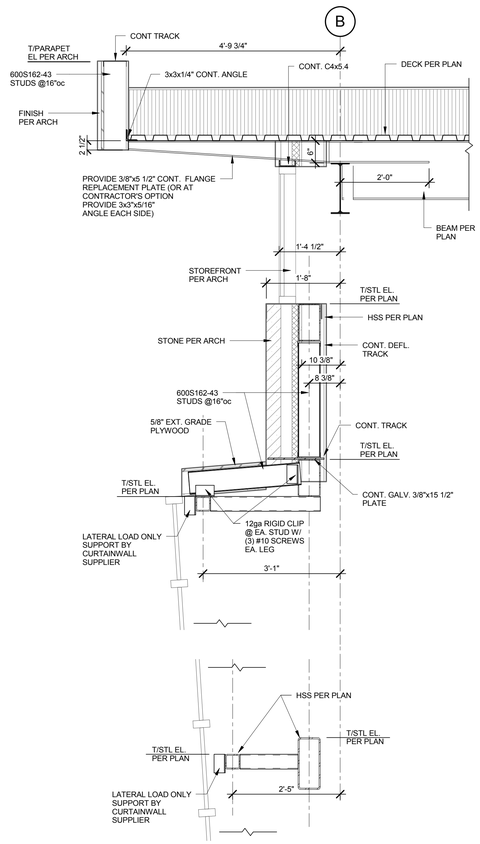

2 SECTION
3/4" = 1'-0"

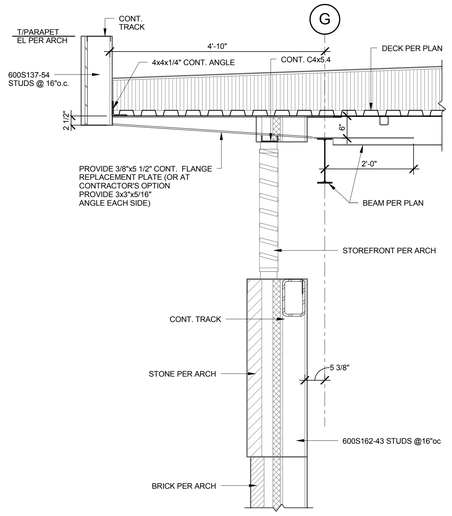

3 SECTION
3/4" = 1'-0"

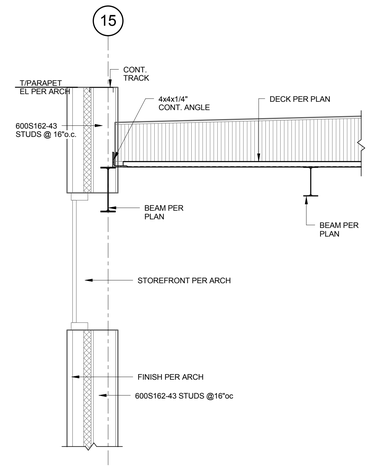

4 SECTION
3/4" = 1'-0"

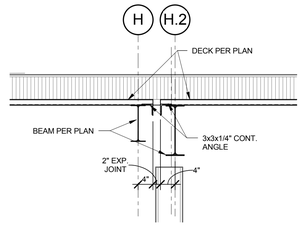

5 SECTION
3/4" = 1'-0"

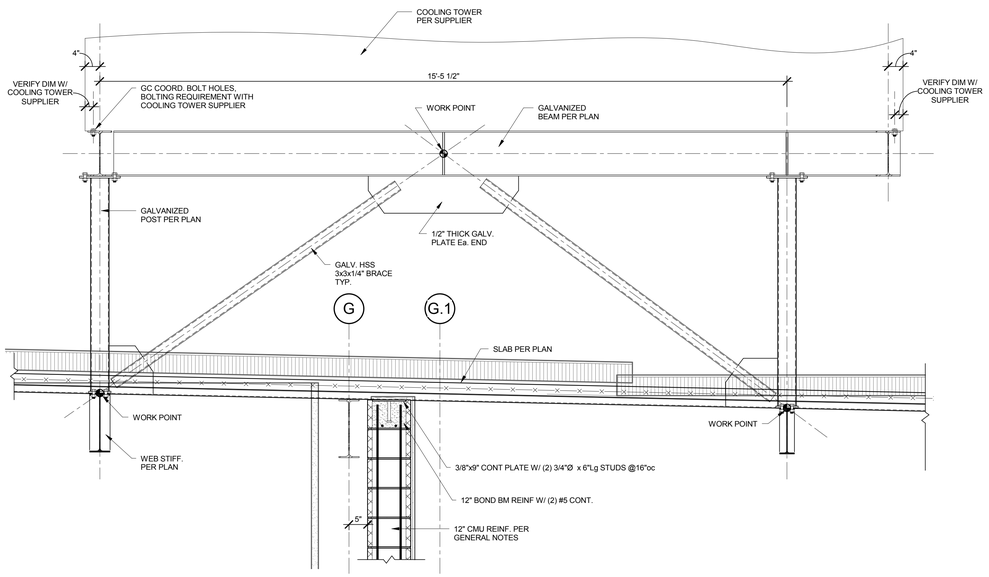

6 SECTION
3/4" = 1'-0"

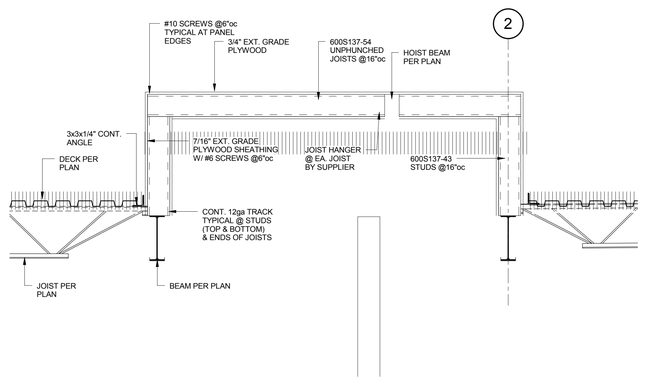

7 SECTION
3/4" = 1'-0"

HTK ARCHITECTS PA
900 S. KANSAS AVE., SUITE 200 TOPEKA, KANSAS 66612
T 785.640.0202 F 785.640.0370
9300 W 110TH ST. STE 160 OVERLAND PARK, KANSAS 66210
T 913.663.3370
www.htkarchitects.com

DATE:
- 4-15-15

REVISED DATE:
- 12-18-14
- 2-9-15
- 3-10-15

HTK PROJECT NUMBER:
- 1410.03

Department of Administration
Office of Facilities and
Procurement Management
800 SW Jackson St. Suite 700
Topeka, Kansas 66612-1216
Phone 785-296-8899
FAX 785-296-3456

STATE OF KANSAS
STATE OF KANSAS ENERGY & SERVICE CENTER
221 SW 7th Street
BUILDING NUMBER 17300-0038

DATE: 4-15-15 DRAWN BY: Author CHECKED BY: Checker REV:

FRAMING SECTIONS

A-012651

S302

CONSTRUCTION DOCUMENTS

4/16/2015 12:03:43 PM U:\Clients H-J\HTK Projects\HTK1408 - Kansas Energy\HTK1408 Dwgs\HTK1408 -S15- Kansas Energy_CLARK.rvt

JCSBC
2-2-2016
Att.9G---0059

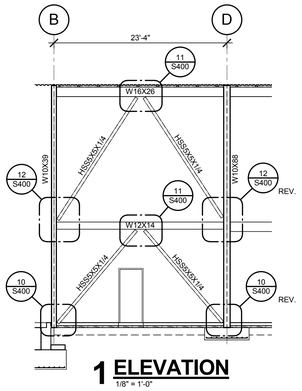

1 ELEVATION
1/8" = 1'-0"

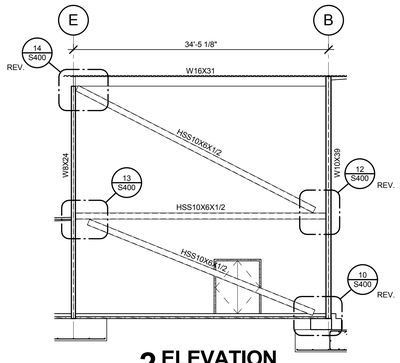

2 ELEVATION
1/8" = 1'-0"

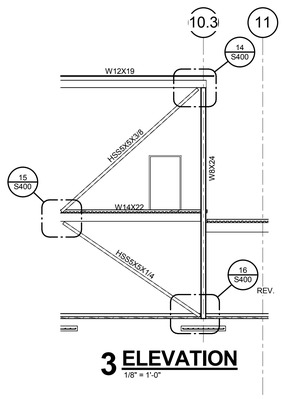

3 ELEVATION
1/8" = 1'-0"

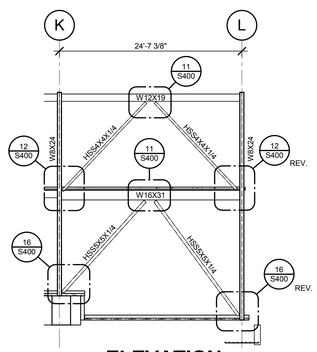

4 ELEVATION
1/8" = 1'-0"

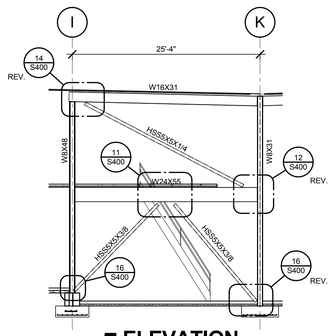

5 ELEVATION
1/8" = 1'-0"

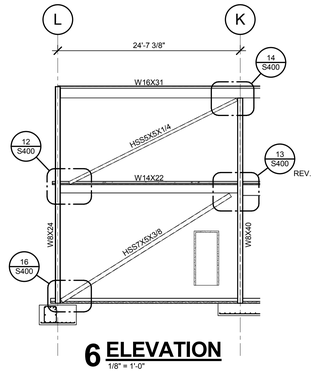

6 ELEVATION
1/8" = 1'-0"

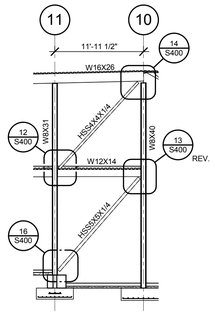

7 ELEVATION
1/8" = 1'-0"

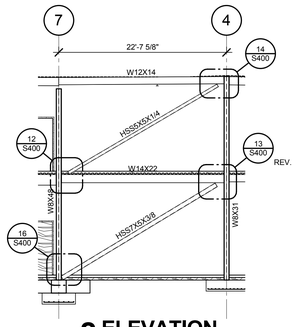

8 ELEVATION
1/8" = 1'-0"

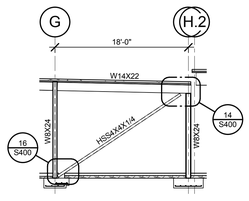

9 ELEVATION
1/8" = 1'-0"

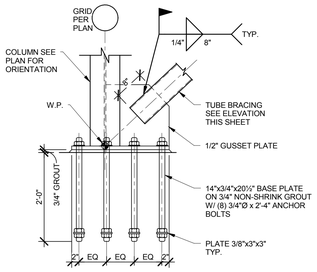

10 SECTION
3/4" = 1'-0"

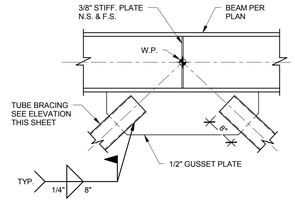

11 SECTION
3/4" = 1'-0"

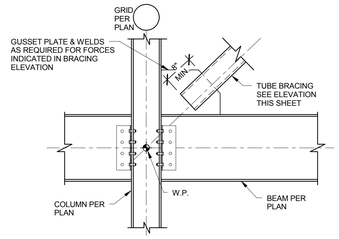

12 SECTION
3/4" = 1'-0"

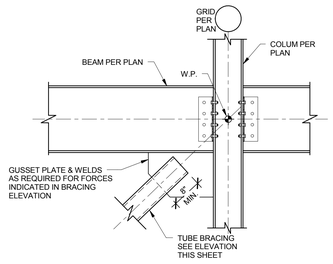

13 SECTION
3/4" = 1'-0"

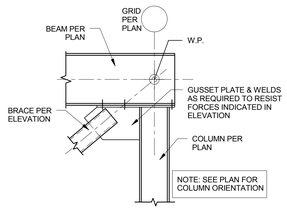

14 SECTION
3/4" = 1'-0"

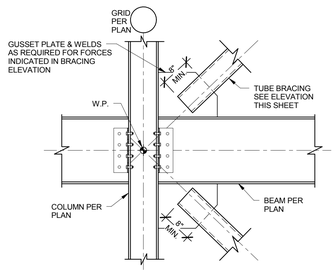

15 SECTION
3/4" = 1'-0"

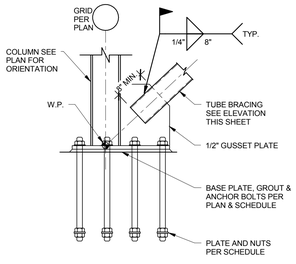

16 SECTION
3/4" = 1'-0"

HTK ARCHITECTS PA
900 S. KANSAS AVE., SUITE 200 TOPEKA, KANSAS 66612 (T) 785.640.0700
9300 W 110TH ST. STE 160 OVERLAND PARK, KANSAS 66210 (F) 913.663.5179
www.htkarchitects.com

DATE:
- 4-15-15

REVISED DATE:
- 12-18-14
- 2-9-15
- 3-10-15
-

HTK PROJECT NUMBER:
- 1410.03

Department of Administration
Office of Facilities and
Procurement Management
800 SW Jackson Street, Suite 500
Topeka, Kansas 66612-1216
Phone 785-296-8899
FAX 785-296-3456

STATE OF KANSAS
STATE OF KANSAS ENERGY & SERVICE CENTER
221 SW 7th Street
BUILDING NUMBER 17300-0038
DATE: 4-15-15 DRAWN BY: Author CHECKED BY: Checker REV:

FRAMING ELEVATIONS

A-012651

S400

CONSTRUCTION DOCUMENTS

4/16/2015 12:03:44 PM U:\Clients H-J\HTK Projects\HTK1408 - Kansas Energy\HTK1408 Dwgs\HTK1408 -S15- Kansas Energy_CLARK.rvt

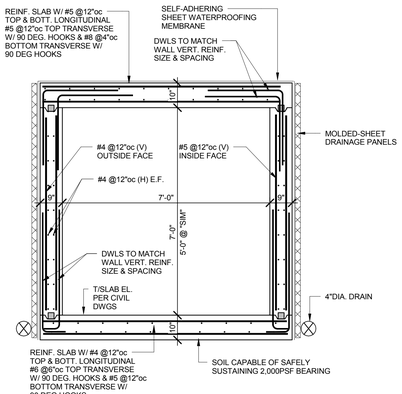

1 TYPICAL PRECAST TUNNEL SECTION
1/2" = 1'-0"

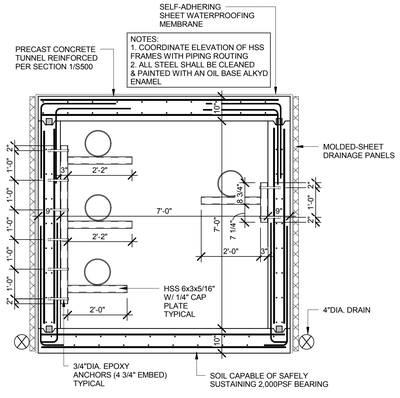

REFER TO CIVIL AND MEP DRAWINGS FOR SUPPORT LOCATIONS AND QUANTITY

2 TYPICAL PIPING SUPPORT FRAMING @ TUNNEL
1/2" = 1'-0"

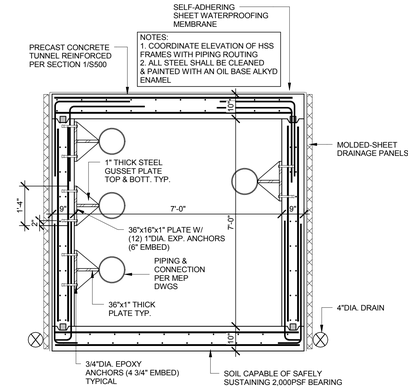

REFER TO CIVIL AND MEP DRAWINGS FOR SUPPORT LOCATIONS AND QUANTITY

3 TYPICAL PIPING EXPANSION COMPENSATING SUPPORT FRAMING
1/2" = 1'-0"

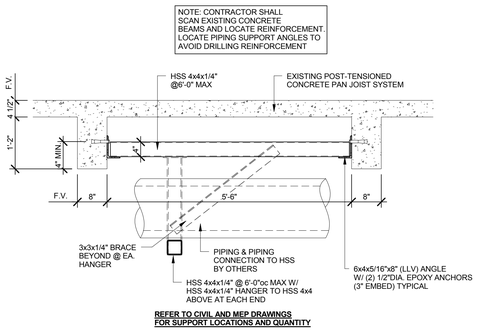

REFER TO CIVIL AND MEP DRAWINGS FOR SUPPORT LOCATIONS AND QUANTITY

4 TYPICAL PIPING SUPPORT FRAMING HUNG FROM EXISTING GARAGE STRUCTURE ABOVE
3/4" = 1'-0"

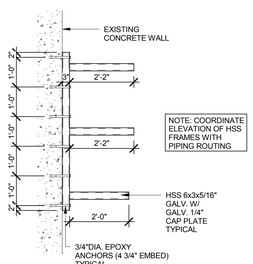

REFER TO CIVIL AND MEP DRAWINGS FOR SUPPORT LOCATIONS AND QUANTITY

5 TYPICAL PIPING SUPPORT FRAMING @ EXISTING CONCRETE WALL
1/2" = 1'-0"

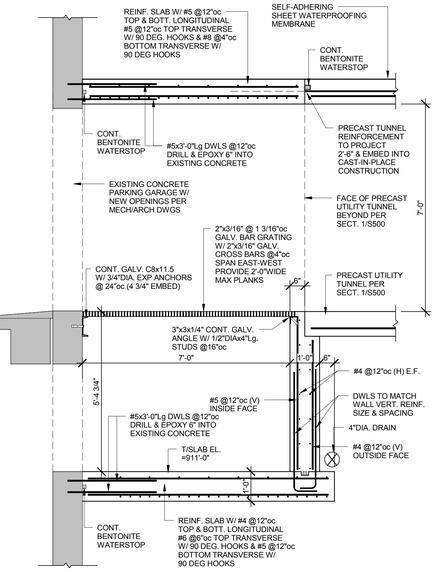

6 UTILITY TUNNEL SECTION
1/2" = 1'-0"

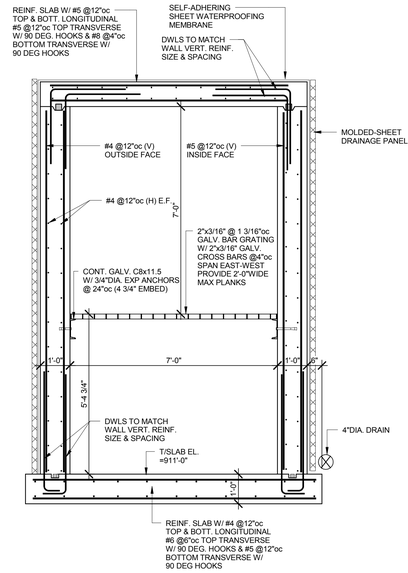

7 UTILITY TUNNEL SECTION
1/2" = 1'-0"

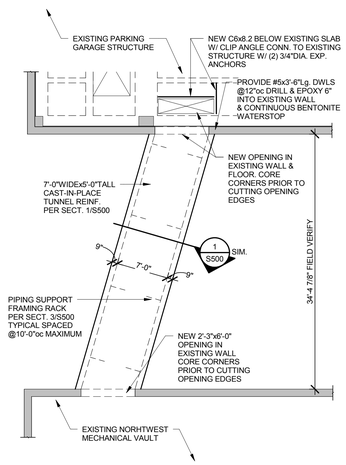

8 UTILITY TUNNEL PARAKING GARAGE TO STATEHOUSE FRAMING PLAN
1/8" = 1'-0"

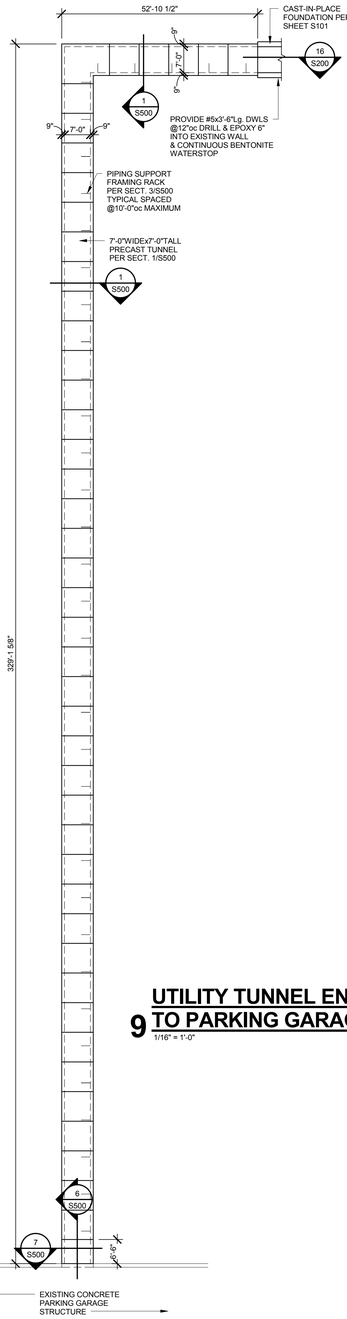

9 UTILITY TUNNEL ENERGY BUILDING TO PARKING GARAGE FRAMING PLAN
1/16" = 1'-0"

HTK ARCHITECTS PA
900 S. KANSAS AVE., SUITE 200 OVERLAND PARK, KANSAS 66210
TOPEKA KANSAS 66112 P 913.663.5370
www.htkarchitects.com

DATE:
- 4-15-15

REVISED DATE:
- 12-18-14
- 2-9-15
- 3-10-15

HTK PROJECT NUMBER:
- 1410.03

Department of Administration
Office of Facilities and
Procurement Management
800 SW Jackson Street, Suite 1100
Topeka, Kansas 66612-1216
Phone 785-296-8899
FAX 785-296-3456

STATE OF KANSAS
STATE OF KANSAS ENERGY & SERVICE CENTER
221 SW 7th Street
BUILDING NUMBER 17300-0038
DRAWN BY: Author CHECKED BY: Checker REV:
DATE: 4-15-15

TUNNEL AND PIPING SUPPORT PLAN

A-012651

S500

CONSTRUCTION DOCUMENTS

4/16/2015 12:03:45 PM U:\Clients H-J\HTK Projects\HTK1408 - Kansas Energy\HTK1408 Dwgs\HTK1408 -S15- Kansas Energy_CLARK.rvt

JCSBC
2-2-2016
Att.9G.--0061

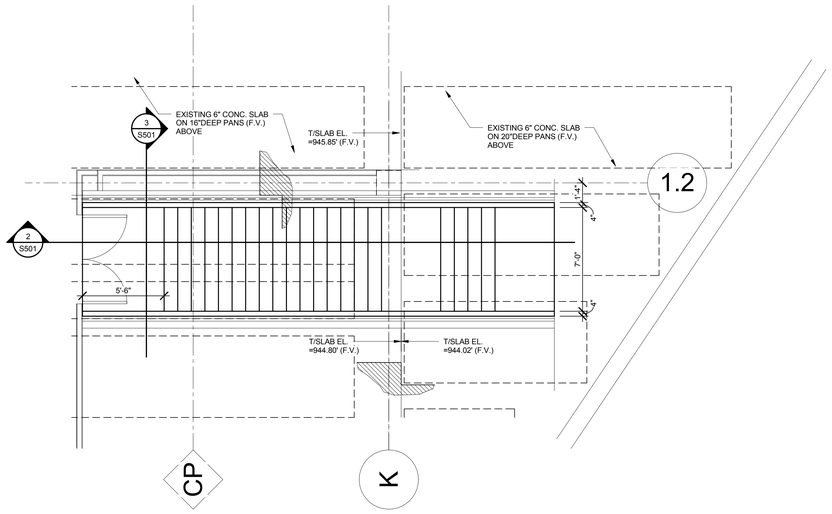

1 STAIR FRAMING PLAN
1/4" = 1'-0"

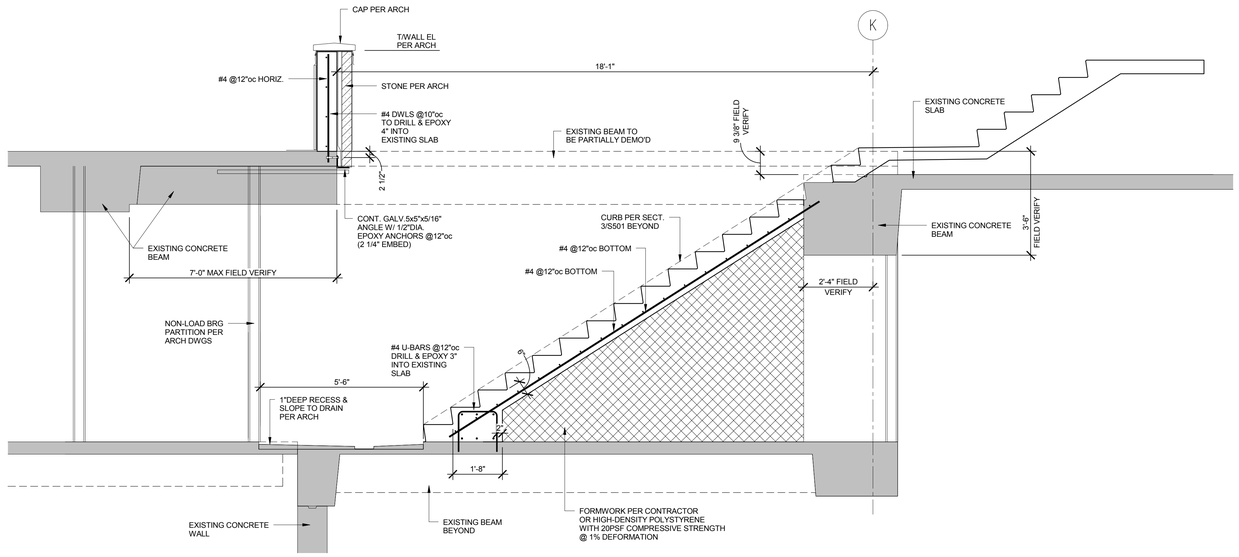

2 SECTION
1/2" = 1'-0"

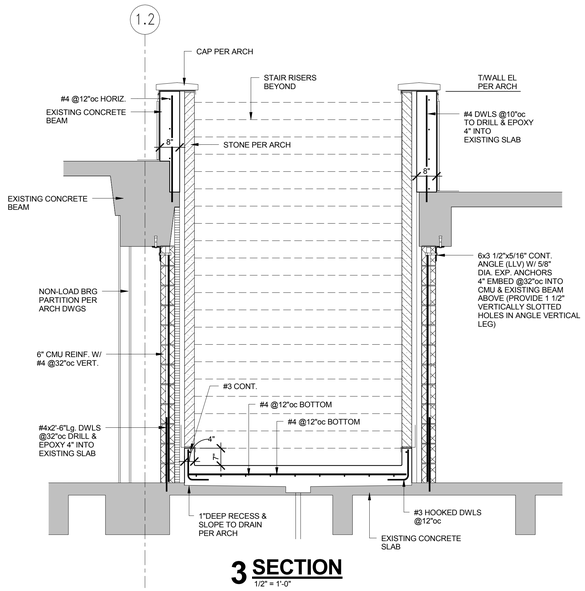

3 SECTION
1/2" = 1'-0"

HTK ARCHITECTS PA
900 S. KANSAS AVE., SUITE 200 TOPEKA, KANSAS 66612 P 785.296.5373
9300 W 110TH ST, STE. 150 OVERLAND PARK, KANSAS 66210 P 913.663.5373
www.htkarchitects.com



DATE:
- 4-15-15

REVISED DATE:
- 12-18-14
- 2-9-15
- 3-10-15

HTK PROJECT NUMBER:
- 1410.03

Department of Administration
Office of Facilities and Procurement Management
800 SW Jackson, Suite 700
Topeka, Kansas 66612-1216
Phone 785-296-8899
FAX 785-296-3456

STATE OF KANSAS
STATE OF KANSAS ENERGY & SERVICE CENTER
221 SW 7th Street
BUILDING NUMBER 17300-0038

DATE: 4-15-15 DRAWN BY: Author CHECKED BY: Checker REV:

STAIR FRAMING AND SECTIONS

A-012651

S501

CONSTRUCTION DOCUMENTS

4/16/2015 12:03:45 PM U:\Clients H-J\HTK Projects\HTK1408 - Kansas Energy\HTK1408 Dwgs\HTK1408 -S15- Kansas Energy_CLARK.rvt

JCSBC
2-2-2016
Att.9G.--0062

MECHANICAL LEGEND

HVAC

	DIRECTION OF FLOW
	ELBOW DOWN
	ELBOW UP
	TEE UP
	TEE DOWN
	CAP
	UNION
	FLANGE
	REDUCER (OR INCREASER)
	PIPE FLEXIBLE CONNECTION
	"Y" TYPE STRAINER
R	RISE IN PIPING
D	DROP IN PIPING
	GUIDE
	ANCHOR
	PRESSURE GAUGE WITH GAUGE COCK
	TEMPERATURE GAUGE
	FLOW INDICATOR
	THERMOMETER
	SITE GLASS
	EXPANSION JOINT
FD	FILTER-DRIER
	DRIP ASSEMBLY
	BASKET TYPE STRAINER
	GATE TYPE VALVE
	BALL TYPE VALVE
	PLUG TYPE VALVE
	GLOBE TYPE VALVE
	BUTTERFLY TYPE VALVE
	BALANCING TYPE VALVE
	GAS (LUBRICATED) TYPE PLUG VALVE
	NEEDLE TYPE VALVE
	PRESSURE REDUCING TYPE VALVE
	QUICK (TYPE) OPENING VALVE
	QUICK (TYPE) CLOSING VALVE
	CHECK TYPE VALVE
	TRIPLE DUTY TYPE VALVE
S	SOLENOID TYPE VALVE
	CONTROL TYPE VALVE (2-WAY)
	CONTROL TYPE VALVE (3-WAY)
	SELF CONTAINED TYPE VALVE
	RELIEF/SAFETY TYPE VALVE
	CIRCUIT SETTER
M	MOTOR OPERATED TYPE VALVE
PS	PRESSURE SWITCH
FS	FLOW SWITCH
EP	ELECTRIC PNEUMATIC CONTROL SWITCH
PE	PNEUMATIC ELECTRIC CONTROL SWITCH
	FLOW CONTROL
—CHS—	CHILLED WATER SUPPLY
– –CHR– –	CHILLED WATER RETURN
—HWS—	HOT WATER HEATING SUPPLY
– –HWR– –	HOT WATER HEATING RETURN
—CTS—	COOLING TOWER SUPPLY
– –CTR– –	COOLING TOWER RETURN
—LPS—	LOW PRESSURE STEAM
– –LPR– –	LOW PRESSURE CONDENSATE RETURN
—HPS—	HIGH PRESSURE STEAM – NO'S GIVE GAUGE PRESSURE IN P.S.I.
—PR—	PUMPED CONDENSATE RETURN
—SPD—	SUMP PUMP DISCHARGE

PLUMBING

—CW—	DOMESTIC COLD WATER
—HCW—	NON-POTABLE COLD WATER
—HW—	DOMESTIC HOT WATER
—HWR—	RECIRCULATING DOMESTIC HOT WATER
—SW—	SOFT DOMESTIC COLD WATER
—SW–HW—	SOFT DOMESTIC HOT WATER
—SW–HWR—	SOFT RECIRCULATING HOT WATER
—LI—	LAWN IRRIGATION
—SAN—	SOIL OR WASTE ABOVE GRADE OR FLOOR
—SAN—	SOIL OR WASTE BELOW GRADE OR FLOOR
—ST—	STORM ABOVE GRADE OR FLOOR
—ST—	STORM BELOW GRADE OR FLOOR
—ST/O—	STORM OVERFLOW ABOVE GRADE OR FLOOR
—ST/O—	STORM OVERFLOW BELOW GRADE OR FLOOR
—V—	PLUMBING VENT
—W—	WATER SERVICE
—G—	GAS (NATURAL)
—PG—	PROPANE (LIQUEFIED PETROLEUM)
—F—	FIRE SPRINKLER PIPING
HB	HOSE BIBB
WH	WALL HYDRANT
WCO	FLUSH WALL CLEAN OUT
CO	CLEAN OUT
GCO	YARD CLEANOUT OR GRADE CLEANOUT
FCO	FLUSH FLOOR CLEAN OUT
	FLOOR DRAIN, AREA DRAIN, FLOOR SINK
RD / ORD	ROOF DRAIN, OVERFLOW ROOF DRAIN
	SHOWER HEAD.
	DOUBLE CHECK BACKFLOW PREVENTER
P #	PLUMBING VENT RISER CALL-OUT NUMBER
RF-# / V-#	VALVE SYSTEM AND NUMBER
SK-	UP TO PLUMBING FIXTURE

ELECTRICAL LEGEND

CONDUIT AND WIRE

	ARROWS INDICATE CONDUIT & WIRE HOME RUN(S) TO PANEL WITH 2–#12 AWG CONDUCTORS UNLESS NOTED OR OTHERWISE REQUIRED.
	CONDUIT RUN CONCEALED IN WALL OR ABOVE CEILING.
	CONDUIT RUN UNDERGROUND OR CONCEALED IN FLOOR SLAB.
—T—	TELEPHONE CONDUIT
—LV—	LOW VOLTAGE CONDUIT AND WIRING
	CONDUIT DROP. CONDUIT RISE (ALL TYPES)

LIGHTING

	BATTERY OPERATED EMERGENCY LIGHT (WALL MOUNTED)
	BATTERY OPERATED EMERGENCY LIGHT (CEILING MOUNTED)
	SURFACE/RECESSED LIGHT FIXTURE
	FLUORESCENT LIGHT FIXTURE
	FLUORESCENT STRIP FIXTURE
	POLE MOUNTED LIGHT FIXTURE
	EXIT LIGHT – DOUBLE FACE – ARROWS AS SHOWN
	EXIT LIGHT – SINGLE FACE – ARROWS AS SHOWN
$ ^{1} ^{2} ^{3} ^{4} ^{K} ^{L} ^{V} ^{L_C}	LIGHTING SWITCHES–SINGLE POLE, 3–WAY, 4–WAY, KEY, LOW VOLTAGE, PILOT LIGHT
$D	DIMMER WITH SINGLE POLE SWITCH
$D3	DIMMER WITH THREE WAY SWITCH (WATTAGE NOTED)
$M	WALL MOUNTED MOTION SENSOR
(A)	CEILING MOUNTED MOTION SENSOR (LETTER DENOTES TYPE)
	DENOTES A WALL MOUNTED FIXTURE
$b	SINGLE POLE SWITCH, "b" = SWITCHLEG

COMMUNICATIONS

	TELEPHONE OUTLET
	LINE THRU DEVICE INDICATES ABOVE COUNTER
	DATA OUTLET
	1 TELEPHONE AND 1 DATA OUTLET
2–2	1ST # INDICATES # OF TELEPHONE OUTLETS; 2ND # INDICATES # OF DATA OUTLETS IN SAME BOX. (SINGLE GANG OUTLET BOX WITH 4" X 4" BACK BOX.)
	FLOOR BOX WITH COMMUNICATIONS OUTLET
TV	TELEVISION ANTENNA OUTLET
	TELEPHONE CABINET OR PLYWOOD BOARD

PROVIDE 4" SQ. BACKBOX WITH A SINGLE GANG RING AND 1" TO WIRE BASKET

WIRING DEVICES

	DUPLEX RECEPTACLE.
	LINE THRU DEVICE INDICATES ABOVE COUNTER
IG	DUPLEX RECEPTACLE WITH ISOLATED GROUND (SINGLE AND FOURPLEX SIMILAR)
5	DUPLEX RECEPTACLE – TOP HALF SWITCHED – BOTTOM HALF TO HAVE POWER AT ALL TIMES
EM	DUPLEX RECEPTACLE ON EMERGENCY POWER (SINGLE AND FOURPLEX SIMILAR)
	FOURPLEX RECEPTACLE
1/2 P	FOURPLEX RECEPTACLE – 1/2 NORMAL POWER, 1/2 ISOLATED GROUND COMPUTER POWER
	SINGLE RECEPTACLE
	CEILING MOUNTED RECEPTACLE
	MULTI–SERVICE FLOOR BOX
	DIVIDED POWER POLE
	FLOOR BOX W/DUPLEX RECEPTACLE
	SPECIAL RECEPTACLE W/NEMA CONFIGURATION AS NOTED
	CLOCK RECEPTACLE
	MULTI–OUTLET ASSEMBLY

POWER DEVICES AND CONTROLS

	THERMOSTAT
	DISCONNECT SWITCH. 30A–3P, NON–FUSED EXCEPT AS NOTED
	MANUAL MOTOR STARTER
	MAGNETIC MOTOR STARTER
	COMBINATION MAGNETIC MOTOR STARTER AND DISCONNECT SWITCH
	SINGLE–PHASE MOTOR
	THREE–PHASE MOTOR
	PANELBOARD (SEE ONE–LINE)
	DISTRIBUTION PANELBOARD
	CONTACTOR
	AUTOMATIC TRANSFER SWITCH
	PHOTOCELL
J	JUNCTION BOX
	PUSHBUTTON
T	TRANSFORMER
VAV	JUNCTION BOX FOR 120 VOLT VAV BOX (VARIABLE AIR VOLUME CONTROL BOX)

ONE–LINE DIAGRAM/RISER DIAGRAM

30/3 25	FUSE (30 AMPERE, 3 POLE CLIPS, 25 AMPERE FUSES)
30/3 25	FUSIBLE DISCONNECT (30 AMPERE, 3 POLE CLIPS, 25 AMPERE FUSES)
M	METER
	TRANSFORMER
60A/3P	CIRCUIT BREAKER (60 AMPERE TRIP, 3 POLE)
2000 AF 1600 AT, LSIG	DRAW–OUT CIRCUIT BREAKER (2000 AMPERE FRAME, 1600 AMPERE TRIP SETTING) (LSIG = LONG TIME, SHORT TIME, INSTANTANEOUS, GROUND FAULT SETTINGS AVAILABLE)
	EQUIPMENT GROUND
	CONDUCTOR AND CONDUIT SIZE DESIGNATOR
	BUS DUCT TO WIRE TRANSITION BOX
	MOTOR STARTER OVERLOAD
xxx X	MOTOR STARTER (NEMA X = STARTER SIZE)
VFD	VARIABLE FREQUENCY DRIVE

UNLESS OTHERWISE NOTED, MOLDED CASE CIRCUIT BREAKERS SHALL HAVE THE FOLLOWING MINIMUM FRAME SIZES:
15A TO 100A – 100AF
110A TO 250A – 250AF
300A TO 400A – 400AF
450A TO 600A – 600AF
700A TO 800A – 800AF
900A TO 1200A – 1200AF

HTK ARCHITECTS PA
9300 W 110TH ST STE 130
OVERLAND PARK KANSAS 66210
P: 913 663 5373
9105 KANSAS AVE
TOPEKA KANSAS 66612
P: 785 266 5373
WWW.HTKARCHITECTS.NET

LS&A
Latimer Sommers & Associates, P.A.
CONSULTING ENGINEERS
3639 SW Summerfield Drive, Suite A
Topeka, Kansas 66614-3974
Telephone: (785) 233-3232
FAX: (785) 233-0647
Email: lsapa@lsapa.com
LSA PROJECT NO. 1402032

WILLIAM R. GASSETT LICENSED PROFESSIONAL ENGINEER 10530
4-15-15

DATE:
- 4-15-15

REVISED DATE:
- 12-18-14
- 2-9-15
- 3-10-15
-

HTK PROJECT NUMBER:
- 1410.03

Department of Administration
Office of Facilities and
Procurement Management
800 SW Jackson, Suite 700
Topeka, Kansas 66612-1216
Phone 785-296-8899
FAX 785-296-3456

STATE OF KANSAS
STATE OF KANSAS ENERGY & SERVICE CENTER
Seventh & Van Buren Street, Topeka, Kansas
BUILDING NUMBER 173000-0038
DRAWN BY: CAD
CHECKED BY: WRB
REV: WRB
DATE: 4-15-15

MECHANICAL AND ELECTRICAL SYMBOLS LIST

A-012651

ME001

CONSTRUCTION DOCUMENTS

JCSBC
2-2-2016
AtL9G.--0063

J:\0 2015 STATE OF KANSAS\0 2015 ESC\Arch\ME001_Mechanical and Electrical Symbols List.dwg 04/14/15 CTC Last.dwg 04/14/15 CTC Last.dwg 02/24/15 CTC Last.dwg 02/24/15 CTC

ELECTRICAL ABBREVIATIONS

(SOME ABBREVIATIONS ON THIS LEGEND MAY NOT BE USED. REFER TO FLOOR PLANS FOR ALL ABBREVIATIONS.)

A	
A	AMPERE/AMBER
AC	ALTERNATING CURRENT
A/C	AIR CONDITIONING
ACT	ABOVE COUNTER TOP
AFF	ABOVE FINISHED FLOOR
AFG	ABOVE FINISHED GRADE
AHU	AIR HANDLING UNIT
A-HR	AMPERE HOUR
AIA	AMERICAN INSTITUTE OF ARCHITECTS
AIC	AMPERE INTERRUPTING CAPACITY
AL	ALUMINUM
ALT	ALTERNATE
AMP	AMPERE
ANSI	AMERICAL NATIONAL STANDARDS INSTITUTE
ARCH	ARCHITECT/ARCHITECTURAL
ATC	AUTOMATIC TEMPERATURE CONTROL
ATS	AUTOMATIC TRANSFER SWITCH
AUTO	AUTOMATIC
AVG	AVERAGE
AWG	AMERICAN WIRE GAUGE
B	
BD	BOARD
BLDG	BUILDING
BLK	BLOCK
BM	BENCH MARK
BSMT	BASEMENT
BTU	BRITISH THERMAL UNIT
BTU/HR	BTU PER HOUR
C	
C	CONDUIT
°C	DEGREE CENTIGRADE
CAB	CABINET
CB	CIRCUIT BREAKER
CCTV	CLOSED CIRCUIT TELEVISION
CFM	CUBIC FEET PER MINUTE
CKT	CIRCUIT
CLG	CEILING
CO	CONVENIENCE OUTLET
COL	COLUMN
COMB	COMBINATION
CONC	CONCRETE
CONST	CONSTRUCTION
CONTR	CONTRACT/CONTRACTOR
CP	CONTROL PANEL
CR	CONTROL RELAY
CRT	CATHODE-RAY TUBE
CS	CONTROL STATION
CSA	CANADIAN STANDARDS ASSOCIATION
CSW	CONTROL SWITCH
CT	CURRENT TRANSFORMER
CTR	CENTER
CTRL	CONTROL
CU	COPPER/CONDENSER UNIT
CW	COOL WHITE
CWP	CHILLED WATER PUMP
D	
DB	DECIBEL
DC	DIRECT CURRENT
DDC	DIRECT DIGITAL CONTROL
DF	DRINKING FOUNTAIN
DIM	DIMENSION
DISC	DISCONNECT
DN	DOWN
DPDT	DOUBLE-POLE DOUBLE-THROW
DPR	DAMPER
DPST	DOUBLE-POLE SINGLE-THROW
DTL	DETAIL
DWG	DRAWING
E	
E	EAST
EA	EACH
EC	EMPTY CONDUIT
EDP	ELECTRONIC DATA PROCESSING
EEMC	ELECTRICAL AND ELECTRONIC MANUFACTURERS ASSOCIATION OF CANADA
EF	EXHAUST FAN
EG	ENGINE-GENERATOR
EIA	ELECTRONIC INDUSTRIES ASSOCIATION
ELEC	ELECTRIC/ELECTRICAL
ELEV	ELEVATION
EMT	ELECTRICAL METALLIC TUBING CONDUIT
ENCL	ENCLOSURE
EP	ELECTRIC PANELBOARD
EQUIP	EQUIPMENT
EWC	ELECTRIC WATER COOLER
EXG	EXISTING
EXH	EXHAUST
EXT	EXTERIOR
F	
F	FUSE/FUSED
°F	DEGREE FAHRENHEIT
FA	FIRE ALARM
FAAN	FIRE ALARM ANNUNCIATOR PANEL
FACP	FIRE ALARM CONTROL PANEL
FC	FOOT CANDLE
FD	FIRE DAMPER
FFE	FINISHED FLOOR ELEVATION
FIXT	FIXTURE
FLA	FULL LOAD AMPERES
FLEX	FLEX METAL CONDUIT
FLR	FLOOR
FLUR	FLUORESCENT
FM	FACTORY MUTUAL
FND	FOUNDATION
FPC	FIRE PROTECTION CONTRACTOR
FTG	FOOTING
FUT	FUTURE
FVNR	FULL VOLTAGE NON-REVERSING
FVR	FULL VOLTAGE REVERSING
FW	FENDER WASHER
FWD	FORWARD
G	
G	GREEN
GA	GAUGE
GC	GENERAL CONTRACTOR
GD	GENERAL DUTY/GRADE
GFCI	GROUND FAULT CIRCUIT INTERRUPTER
GFI	GROUND FAULT INTERRUPTER
GPDW	GYPSUM DRYWALL
GRD	GROUND
GRMC	GALVANIZED RIGID METAL CONDUIT
GV	GALVANIZED
H	
H	HIGH/HEIGHT
HD	HEAVY DUTY
HDW	HARDWARE
HGT	HEIGHT
HHMB	HEX HEAD MACHINE BOLT
HO	HIGH OUTPUT
H-O-A	HAND-OFF-AUTO
HP	HORSEPOWER
HPF	HIGH POWER FACTOR
HPS	HIGH PRESSURE SODIUM
HOR	HORIZONTAL
HR	HOUR
HT	HEIGHT
HTG	HEATING
HV	HIGH VOLTAGE
HVAC	HEATING, VENTILATING, AIR CONDITIONING
HWCP	HOT WATER CIRCULATING PUMP
HZ	HERTZ
I	
IC	INTERCOM
ICAND	INCANDESCENT
ID	INSIDE DIMENSION
IEC	INTERNATIONAL ELECTROTECHNICAL COMMISSION
IF	INSIDE FROSTED
IMC	INTERMEDIATE METAL CONDUIT
INCAN	INCANDESCENT
INSUL	INSULATED
INT	INTERIOR
J	
JB	JUNCTION BOX
JIC	JOINT INDUSTRIAL COUNCIL
K	
°K	DEGREE KELVIN
KO	KNOCKOUT
KVA	KILOVOLT-AMP
KW	KILOWATT
KWH	KILOWATT-HOUR
L	
LA	LIGHTNING ARRESTOR
LC	LIGHTING CONTRACTOR
LFMC	LIQUIDTIGHT FLEXIBLE METAL CONDUIT
LOA	LENGTH OVER ALL
LP	LIGHTING PANEL/LIGHTING PANELBOARD
LPF	LOW POWER FACTOR
LRA	LOCKED ROTOR AMPERE
LTG	LIGHTING
LV	LOW VOLTAGE
LW	LOCK WASHER
M	
MAG	MAGNETIC
MAN	MANUAL
MAX	MAXIMUM
MCP	MOTOR CIRCUIT PROTECTOR
MECH	MECHANICAL
MFR	MANUFACTURER
MG	MOTOR-GENERATOR
MIC	MICROPHONE
MIN	MINIMUM
MH	METAL HALIDE/MANHOLE
MOG	MOGUL
MPS	MANUAL PULL STATION
MTD	MOUNTED
MTG	MOUNTING
MTR	MOTOR
MTS	MANUAL TRANSFER SWITCH
MV	MERCURY VAPOR
N	
N	NORTH/NEUTRAL
NA	NOT APPLICABLE
NATS	NON-AUTOMATIC TRANSFER SWITCH
NC	NORMALLY CLOSED
NEC	NATIONAL ELECTRICAL CODE
NEMA	NATIONAL ELECTRICAL MANUFACTURERS ASSOCIATION
NF	NON-FUSED
NFPA	NATIONAL FIRE PROTECTION ASSOCIATION
NIC	NOT IN CONTRACT
NO	NORMALLY OPEN
NOM	NOMINAL
NTS	NOT TO SCALE
O	
OC	ON CENTER(S)
OD	OUTSIDE DIMENSION/ OUTSIDE DIAMETER
OH	OVERHEAD
OL	OVERLOAD
P	
P	POLE/PUMP
PA	PUBLIC ADDRESS
PB	PULL BOX/PUSH BUTTON
PC	PLUMBING CONTRACTOR
PE	PROFESSIONAL ENGINEER
PEC	PHOTO ELECTRIC CELL
PF	POWER FACTOR
PL	PILOT LIGHT/PROPERTY LINE
PNL	PANEL
PNLBD	PANELBOARD
POS	POSITION
PP	POWER PANEL/POWER PANELBOARD
PREFAB	PREFABRICATED
PSI	POUNDS PER SQUARE INCH
PT	POTENTIAL TRANSFORMER/POINT
P/T	PAN AND TILE
PVC	RIGID POLYVINYL CHLORIDE CONDUIT
PVMT	PAVEMENT
PWD	PLYWOOD
PWR	POWER
Q	
QTY	QUANTITY
R	
R	RED
RA	RETURN AIR
RAD	RADIUS
RAF	RETURN AIR FAN
RECEP	RECEPTACLE
REV	REVERSE/REVISION
RF	RETURN FAN
RLY	RELAY
RM	ROOM
RMC	RIGID METAL CONDUIT
RPM	REVOLUTIONS PER MINUTE
RTU	ROOFTOP UNIT
S	
S	SOUTH
SA	SUPPLY AIR
SAF	SUPPLY AIR FAN
SECT	SECTION
SC	SCREW COVER
SCH	SCHEDULE
SEL	SELECTOR
SF	SUPPLY FAN/SQUARE FEET
SHT	SHEET
SPDT	SINGLE-POLE DOUBLE-THROW
SPEC	SPECIFICATION
SPK	SPEAKER
SPST	SINGLE-POLE SINGLE-THROW
SQ	SQUARE
SST	STAINLESS STEEL
STD	STANDARD
ST-FLEX	SEALTITE (LIQUIDTIGHT) FLEXIBLE METAL CONDUIT
STL	STEEL
STR	STARTER
SURF	SURFACE
SUSP	SUSPEND
SWBD	SWITCHBOARD
SW	SWITCH
T	
TB	TERMINAL BOX
TBD	TERMINAL BOARD
TCP	TEMPERATURE CONTROL PANEL
TELE	TELEPHONE/TELEPHOTO
TS	TRANSFER SWITCH
TV	TELEVISION
TVSS	TRANSIENT VOLTAGE SURGE SUPPRESSION
TYP	TYPICAL
U	
UL	UNDERWRITER LABORATORIES, INC.
UPS	UNINTERRUPTIBLE POWER SUPPLY
V	
V	VOLTAGE
VA	VOLT-AMP
VAV	VARIABLE AIR VOLUME
VDT	VIDEO DISPLAY TERMINAL
VERT	VERTICAL
VFD	VARIABLE FREQUENCY DRIVE
VHO	VERY HIGH OUTPUT
W	
W	WEST/WIRE/WATT/WIDTH/ WIDE
WA	WIDE ANGLE
WD	WOOD
W/	WITH
W/O	WITHOUT
WP	WEATHERPROOF
WW	WARM WHITE/WIREWAY
X	
XFMR	TRANSFORMER
Y	
Y	WYE
Z	
Z	ZOOM
SYMBOLS	
Φ	PHASE
Δ	DELTA
%	PERCENT
#	NUMBER
≈	APPROXIMATELY

MECHANICAL ABBREVIATIONS

(SOME ABBREVIATIONS ON THIS LEGEND MAY NOT BE USED. REFER TO FLOOR PLANS FOR ALL ABBREVIATIONS.)

A	AMPS, AIR (COMPRESSED)	GV	GRAVITY VENTILATOR	PP	PIT PUMP
A/C	AIR CONDITIONING	GW	GROUND WATER	PRV	PRESSURE REDUCING VALVE
AD	AREA DRAIN			QTY	QUANTITY
AFF	ABOVE FINISH FLOOR	H	HUMIDISTAT		
AFC	ABOVE FINISH CEILING	HB	HOSE BIBB	R	RETURN
AFG	ABOVE FINISH GRADE	HEX	HEAT EXCHANGER	RA	RETURN AIR
AFS	AIR FLOW MEASURING STATION	HPS	HIGH PRESSURE STEAM	RAD	RADIATOR
AHU	AIR HANDLING UNIT	HPR	HIGH PRESSURE CONDENSATE RETURN	RAF	RETURN AIR FAN
AS	AIR SEPARATOR	HRU	HEAT RECOVERY UNIT	RD	REFRIGERANT DISCHARGE, ROOF DRAIN
		HTG	HEATING	REV	REVISION
BBD	BOILER BLOWDOWN	HTR	HEATER	RF	REFRIGERANT
BDD	BACKDRAFT DAMPER	HVU	HEATING AND VENTILATING UNIT	RFS	REFRIGERANT SUCTION
BFP	BACKFLOW PREVENTER	HW	DOMESTIC HOT WATER	RG	RETURN GRILLE
BFW	BOILER FEED WATER	HWR	HOT WATER HEATING RETURN	RH	RELATIVE HUMIDITY
BOD	BOTTOM OF DUCT	HWP	DOMESTIC HOT WATER PUMP	RHW	DOMESTIC RECIRCULATING HOT WATER
BOP	BOTTOM OF PIPE	HWRP	DOMESTIC HOT WATER RECIRC. PUMP	RLA	RUNNING LOAD AMPS
BOS	BOTTOM OF STRUCTURE	HWS	HOT WATER HEATING SUPPLY	RFL	REFRIGERANT LIQUID
BTH	BRITISH THERMAL UNIT			RPM	REVOLUTIONS PER MINUTE
BFD	BOILER FEED LINE	IAQ	INDOOR AIR QUALITY SENSOR	RTN	LOW PRESSURE CONDENSATE RETURN
		IE	INVERT ELEVATION	RTU	ROOF TOP UNIT
CFM	CUBIC FEET PER MINUTE	IG	ISOLATED GROUND		
CHP	CHILLED WATER PUMP			S	SOLENOID
CHR	CHILLED WATER RETURN	KV	KILOVOLT	SA	SUPPLY AIR
CHS	CHILLED WATER SUPPLY	KVA	KILOVOLT AMPS	SAN	SANITARY
CKT	CIRCUIT	KW	KILOWATT	SCHP	SECONDARY CHILLED WATER PUMP
CO	CLEANOUT / CARBON MONOXIDE			SD	SUPPLY DIFFUSER/SAN. OR COND. DRAIN
CO2	CARBON DIOXIDE SENSOR	L	LOUVER	SE	SEWAGE EJECTOR
CTR	COOLING TOWER RETURN	LAT	LEAVING AIR TEMPERATURE	SHWP	SECONDARY HOT WATER PUMP
CTS	COOLING TOWER SUPPLY	LDB	LEAVING DRY BULB	SMP	SNOW MELT PUMP
CU	COPPER, CONDENSING UNIT	LP	LIQUEFIED PETROLEUM	SMR	SNOW MELT RETURN
CUH	CABINET UNIT HEATER	LPCP	LOW PRESSURE CONDENSATE PUMP	SMS	SNOW MELT SUPPLY
CW	DOMESTIC COLD WATER	LPS	LOW PRESSURE STEAM	SPF	SMOKE PURGE FAN
CWP	DOMESTIC COLD WATER PUMP	LPR	LOW PRESSURE CONDENSATE RETURN	SP	STATIC PRESSURE
		LRA	LOCKED ROTOR AMPS	SPD	SPLITTER DAMPER
DDC	DIRECT DIGITAL CONTROL	LWB	LEAVING WET BULB	SR	SUPPLY REGISTER
DDVAV	DUAL DUCT VARIABLE AIR VOLUME	LWT	LEAVING WATER TEMPERATURE	ST	STORM DRAIN
DN	DOWN			ST/O	STORM OVERFLOW
DPR	DAMPER	MA	MAKE UP AIR	SW	STORM WATER
DSP	DUPLEX SUMP PUMP	MBH	1000 BTU PER HOUR	SWC	SOFT DOMESTIC COLD WATER
DWH	DOMESTIC WATER HEATER	MC	MECHANICAL CONTRACTOR	SWH	SOFT DOMESTIC HOT WATER
DX	DIRECT EXPANSION	MCC	MOTOR CONTROL CENTER		
		MD	MANUAL DAMPER	TCV	TEMP. CONTROL VALVE
EAT	ENTERING AIR TEMPERATURE	MFR	MANUFACTURER	TNK	TANK
EF	EXHAUST FAN	MH	MANHOLE	TSTAT	THERMOSTAT
ER	EXHAUST REGISTER	MTD	MOUNTED		
ESP	ELEVATOR SUMP PUMP	MTR	MOTOR	UH	UNIT HEATER
ET	EXPANSION TANK	MUAF	MAKE UP AIR FAN	UNO	UNLESS NOTED OTHERWISE
ETR	EXISTING TO REMAIN	MZD	MOTORIZED DAMPER	UPS	UNINTERRUPTIBLE POWER SUPPLY
EWB	ENTERING WET BULB				
EWC	ELECTRIC WATER COOLER	N	NITROGEN	V	VENT PIPE
EWT	ENTERING WATER TEMPERATURE	N/A	NOT APPLICABLE	VAV	VARIABLE AIR VOLUME
EXH	EXHAUST	NIC	NOT IN CONTRACT	VD	VOLUME DAMPER
		N/C	NORMALLY CLOSED	VOC	VOLATILE ORGANIC COMPOUND SENSOR
F/S	COMBINATION FIRE AND SMOKE DAMPER	N/O	NORMALLY OPEN	VTR	VENT THROUGH ROOF
FCO	FLUSH FLOOR CLEANOUT				
FCU	FAN COIL UNIT	OC	ON CENTERS	W/	WITH
FD	FIRE DAMPER, FLOOR DRAIN	OA	OUTSIDE AIR	W/O	WITHOUT
FL	FLOW LINE ELEVATION	ORD	OVERFLOW ROOF DRAIN	WB	WET BULB
FLA	FULL LOAD AMPS			WCO	FLUSH WALL CLEANOUT
FLR	FLOOR	PCHP	PRIMARY CHILLED WATER PUMP	WH	WALL HYDRANT
FP	FIRE PROTECTION	PD	PUMP DISCHARGE	WP	WEATHERPROOF
		PH	PHASE	WS	WATER SOFTENER
GCO	FLUSH GRADE CLEANOUT	PHWP	PRIMARY HOT WATER PUMP		
GMP	GLYCOL MAKE-UP PUMP	PIV	POST INDICATOR VALVE	XP	EXPLOSION PROOF
GND	GROUND				
GPM	GALLONS PER MINUTE				

GENERAL

NOT ALL SYMBOLS OR ABBREVIATIONS MAY BE USED

- (1) MECHANICAL NOTE REFERENCE
- [2] ELECTRICAL NOTE REFERENCE
- ⟨3⟩ DEMOLITION NOTE REFERENCE
- △4 REVISION NOTE REFERENCE
- ◇5 GENERAL CONSTRUCTION NOTE REFERENCE
- CONNECTION POINT BETWEEN NEW & EXISTING WORK
- 1/M1 DETAIL REFERENCE – NO./SHEET NO.
- 2/M1 SECTION CUT – SECTION/SHEET NO.

HTK ARCHITECTS PA
9300 W 110TH ST STE 130
OVERLAND PARK KANSAS 66210
P: 913 663 5373
9105 KANSAS AVE
TOPEKA KANSAS 66612
P: 785 266 5373
WWW.HTKARCHITECTS.NET

LS&A Latimer Sommers & Associates, P.A.
CONSULTING ENGINEERS
3639 SW Summerfield Drive, Suite A
Topeka, Kansas 66614-3974
Telephone: (785) 233-3232
FAX: (785) 233-0647
Email: lsapa@lsapa.com

LSA PROJECT NO. 1402032

WILLIAM R. BASSETT LICENSED PROFESSIONAL ENGINEER 10530 4-15-15

DATE:
- 4-15-15

REVISED DATE:
- 12-18-14
- 2-9-15
- 3-10-15

HTK PROJECT NUMBER:
- 1410.03

Department of Administration
Office of Facilities and Property
Procurement Management
800 SW Jackson, Suite 700
Topeka, Kansas 66612-1216
Phone 785-296-8899
FAX 785-296-3456

STATE OF KANSAS
STATE OF KANSAS ENERGY & SERVICE CENTER
Seventh & Van Buren Street, Topeka, Kansas
BUILDING NUMBER 173000-00038
DRAWN BY: CAD CHECKED BY: WRB REV: WRB
DATE: 4-15-15

MECHANICAL AND ELECTRICAL ABBREVIATIONS LIST

A-012651

ME002

CONSTRUCTION DOCUMENTS

... ME002_Mechanical and Electrical Symbols List.dwg 96 04/14/15 CTC List.dwg 96 04/14/15 CTC List.dwg 96 02/24/15 CTC List.dwg 96 02/24/15 CTC

SITE LIGHT FIXTURE SCHEDULE												
MARK	MANUFACTURER	MODEL NUMBER	MOUNTING			FINISH	LAMPS					REMARKS
			RECESS.	SURF.	WALL		LED	FLUOR.	HID.	LUM/WATT	WATTAGE	
"SL1"	MCGRAW EDISON	TLM-B05-LED-E1-SL4-**-8030		POLE		BRUSHED ALUM.	X			79.1	124	1, 2, 3, 4, 10
"SL2"	MCGRAW EDISON	TLM-B05-LED-E1-SLR-**-8030		POLE		BRUSHED ALUM.	X			75.7	124	1, 2, 3, 4, 7, 10
"SL3"	MCGRAW EDISON	ISS-B01-LED-E1-BL2-**-8030		X		BRUSHED ALUM.	X			80.6	27	4, 5, 10
"SL4"	WILLIAMS	LEDSQ60-PH11/830-CS-AC/CAL EDD*PH-277	X			SEMI SPECULAR	X			57.1	17	4, 10
"SL5"	US ARCHITECTURAL	8630-16LEDWW277-RAL-****-S-SF	X			BRUSHED ALUM.	X			–	19	4, 6, 10
"SL6"	KIM	LTV82SS-SP-18L-3K-UV-PL	X			STAINLESS STEEL	X			56.4	23	4, 9, 10, 11
"SL7"	KIM	LTV82SS-NF-18L-3K-UV-PL	X			STAINLESS STEEL	X			45.5	23	4, 8, 10, 11

REMARKS LEGEND:

1 – PROVIDE WITH (1) HEAD.
2 – VERIFY EPA RATING OF POLE WITH MANUFACTURER.
3 – MOUNT ON 20' POLE.
4 – 277V.
5 – MOUNT AT 9'–10" AFF.
6 – MOUNT AT 2 FT. AFG, RECESSED IN CONCRETE WALL.
7 – NEW POLE MOUNTED ON EXISTING FOUNDATION. PROVIDE ANCHOR BOLT ADAPTER PLATE OR CUT EXISTING ANCHOR BOLTS OFF AND INSERT NEW ANCHOR BOLTS INTO EXISTING FOUNDATION. NEW ANCHOR BOLTS SHALL BE ADHERED TO FOUNDATION USING EPOXY ADHESIVE.
8 – NARROW FLOOD.
9 – SPOT FLOOD.
10 – ALL LED'S SHALL BE PROVIDED IN 3000°K COLOR TEMPERATURE.
11 – IN GROUND LUMINAIRE SPUN COPPER HOUSING, BRONZE CLAMPING RING WITH ACRYLIC–LENS.

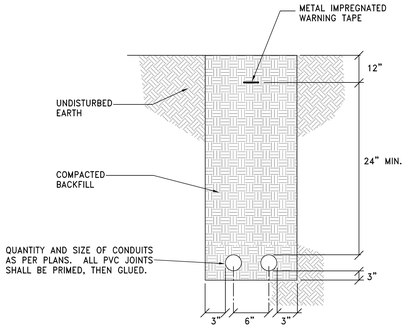

D3 Underground Secondary Service
NO SCALE

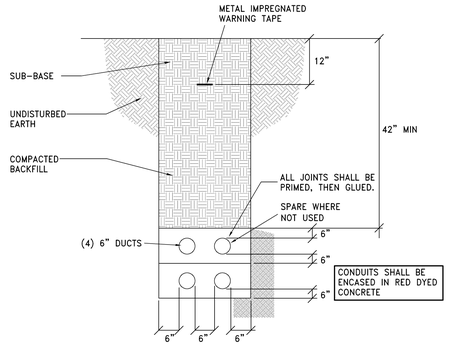

C3 Underground Primary Service
NO SCALE

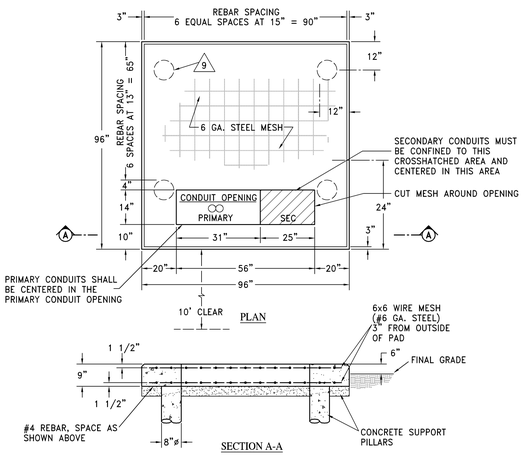

B4 Transformer Pad Detail
1/2"=1'-0" 750-1000 KVA

NOTES:
1. THE PAD LOCATION AND SIZE SHALL BE APPROVED BY POWER COMPANY.
2. TRANSFORMER SHALL BE INSTALLED WHERE INDICATED ON PLANS.
4. CONTRACTOR SHALL EXTEND FORMS DOWN TO AT LEAST 3" BELOW AVERAGE GROUND LINE.
5. THE CONCRETE SHALL BE A MINIMUM OF 3,000 LB. MIX.
6. THE TOP OF THE TRANSFORMER PAD SHALL RECEIVE A SMOOTH TROWEL FINISH. THE CORNERS AND EDGES SHALL BE ROUNDED OR BEVELED.
7. THE CONDUIT OPENING SHALL BE FREE AND CLEAR OF CONCRETE.
8. THE TOPS OF THE CONDUITS SHALL BE FLUSH WITH THE TOP OF THE CONCRETE PAD.
9 PILLARS ARE FORMED BY AUGERING AN 8" DIAMETER HOLE TO A DEPTH OF UNDISTURBED EARTH. A SEPARATOR, SUCH AS TAR PAPER, SHOULD BE PLACED BETWEEN THE PILLAR AND THE PAD SO THAT THE PAD CAN BE LEVELED AT A LATER TIME IF NECESSARY
12. POWER COMPANY SHALL RESERVE THE RIGHT NOT TO ACCEPT THE CONDITION OF THE CONCRETE PAD IF IT FAILS TO MEET THE REQUIREMENTS STATED HERE–IN.
11 PAD DIMENSIONS AND CONDUIT OPENING DIMENSIONS SHALL BE VERIFIED WITH POWER COMPANY'S LOCAL SERVICE CENTER PRIOR TO INSTALLATION.

GENERAL NOTES:
1. SAFETY NOTICE TO CONTRACTOR: IN ACCORDANCE WITH GENERALLY ACCEPTED CONSTRUCTION PRACTICES, THE CONTRACTOR SHALL BE SOLELY AND COMPLETELY RESPONSIBLE FOR CONDITIONS OF THE JOB SITE, INCLUDING SAFETY OF ALL PERSONS AND PROPERTY DURING PERFORMANCE OF THE WORK. THIS REQUIREMENT WILL APPLY CONTINUOUSLY AND SHALL NOT BE LIMITED TO NORMAL WORKING HOURS. ANY CONSTRUCTION OBSERVATION BY THE ENGINEER OF THE CONTRACTOR'S PERFORMANCE IS NOT INTENDED TO INCLUDE REVIEW OF THE ADEQUACY OF THE CONTRACTOR'S SAFETY MEASURES, IN, ON OR NEAR THE CONSTRUCTION SITE.
2. THE CONTRACTOR WILL BE HELD SOLELY RESPONSIBLE FOR AND SHALL TAKE ALL PRECAUTIONS NECESSARY TO AVOID PROPERTY DAMAGE TO ADJACENT PROPERTIES DURING THE CONSTRUCTION PHASES OF THIS PROJECT.
3. THE CONTRACTOR SHALL INCLUDE IN BASE BID ANY AND ALL FEES IMPOSED ON THE OWNER BY ANY UTILITY COMPANY FOR WORK ASSOCIATED WITH THIS PROJECT.
4. THE CONTRACTOR SHALL COORDINATE WITH LOCAL POWER COMPANY SO AS TO PROVIDE THE NEW PRIMARY SERVICE FOR THE NEW TENNIS COURTS AS INDICATED HERE–IN.

UTILITY NOTES:
1. THE CONTRACTOR IS SPECIFICALLY CAUTIONED THAT THE LOCATION AND/OR ELEVATIONS OF EXISTING UTILITIES AS SHOWN ON THESE PLANS IS BASED ON RECORDS OF THE VARIOUS UTILITY COMPANIES, AND WHERE POSSIBLE, MEASUREMENTS TAKEN IN THE FIELD. THE INFORMATION IS NOT TO BE RELIED ON AS BEING EXACT OR COMPLETE. THE CONTRACTOR MUST CALL THE APPROPRIATE UTILITY COMPANIES AT LEAST 72 HOURS BEFORE ANY EXCAVATION TO REQUEST EXACT FIELD LOCATION OF UTILITIES. IT SHALL BE THE RESPONSIBILITY OF THE CONTRACTOR TO COORDINATE WITH AND RELOCATE ALL EXISTING UTILITIES WHICH CONFLICT WITH THE PROPOSED IMPROVEMENTS SHOWN ON THE PLANS.

UTILITY CONTACTS:
WESTAR: WAYNE KLIEWER 785–575–1693 WAYNE.KLIEWER@WESTARENERGY.COM
KANSAS GAS SERVICE: DAWN HECKER ENGINEER III 785–431–4251 DAWN.HECKER@ONEGAS.COM
WATER: JEFF HUNT CITY ENGINEERING DIVISION 785–368–3842
SEWER: DENNIS DUNBAR WATER POLLUTION CONTROL 785–368–4344

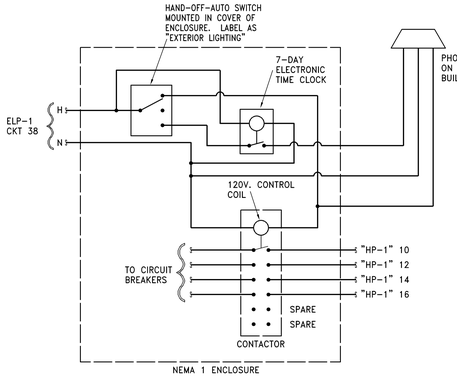

D2 Exterior Lighting Control Panel Schematic
NO SCALE

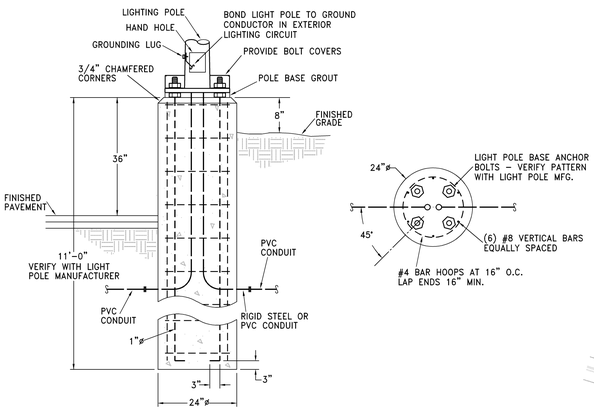

C2 Light Pole Base Detail
NO SCALE

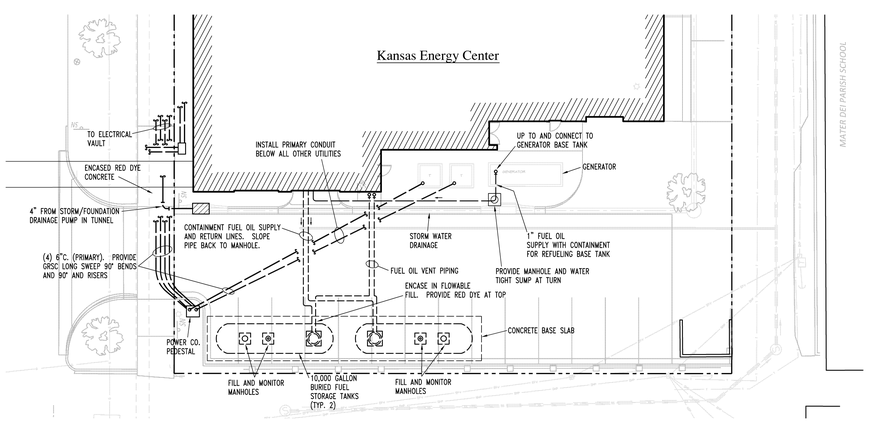

D1 Partial Site Plan
1/16"=1'-0" MECH/ELEC

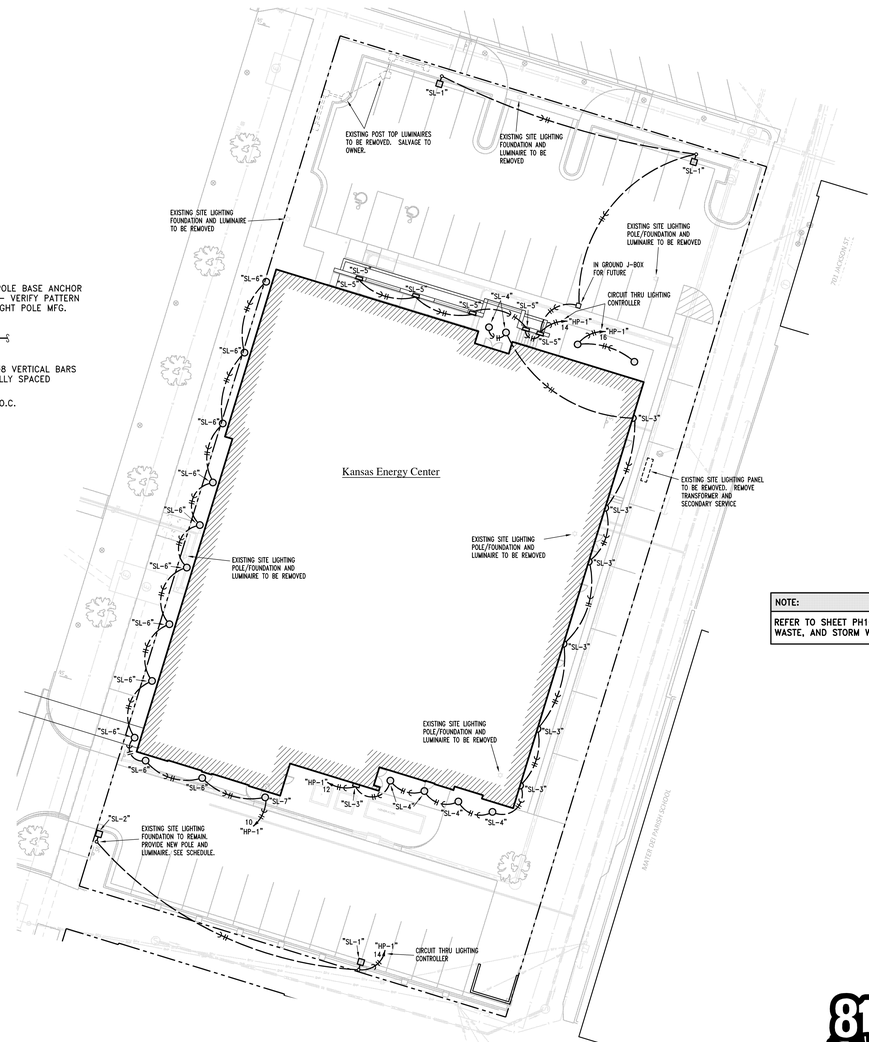

B1 Partial Site Plan
1"=20'-0" MECH/ELEC

NOTE:
REFER TO SHEET PH101 FOR DOMESTIC WATER, WASTE, AND STORM WATER PIPING.

811 Know what's below. Call before you dig.
Call 811 in Kansas before you dig, or log on to http://www.kansasonecall.com/

HTK ARCHITECTS PA
9105 KANSAS AVE. TOPEKA KANSAS 66612 P: 785-266-5323
3200 W 110TH ST STE 120 OVERLAND PARK KANSAS 66210 P: 913 663 5323
WWW.HTKARCHITECTS.NET

LS&A Latimer Sommers & Associates, P.A.
CONSULTING ENGINEERS
3639 SW Summerfield Drive, Suite A
Topeka, Kansas 66614-3974
Telephone: (785) 233-3232
FAX: (785) 233-0647
Email: lsapa@lsapa.com
LSA PROJECT NO. 1402032

WILLIAM R. BASSETT LICENSED PROFESSIONAL ENGINEER 10530 4-15-15

DATE:
- 4-15-15

REVISED DATE:
- 12-18-14
- 2-9-15
- 3-10-15

HTK PROJECT NUMBER:
- 1410.03

Department of Administration
Office of Facilities and
Procurement Management
800 SW Jackson, Suite 700
Topeka, Kansas 66612-1216
Phone 785-296-8899
FAX 785-296-3486

STATE OF KANSAS
STATE OF KANSAS ENERGY & SERVICE CENTER
Seventh & Van Buren Street, Topeka, Kansas
BUILDING NUMBER 1730-00038
DATE: 4-15-15 DRAWN BY: CAD CHECKED BY: WRB REV: WRB

SITE PLAN - MECH/ELEC

A-012651

ME101

CONSTRUCTION DOCUMENTS

JCSBC
2-2-2016
AtL9G--0065

...ME101.dwg 1 04/14/15 STC

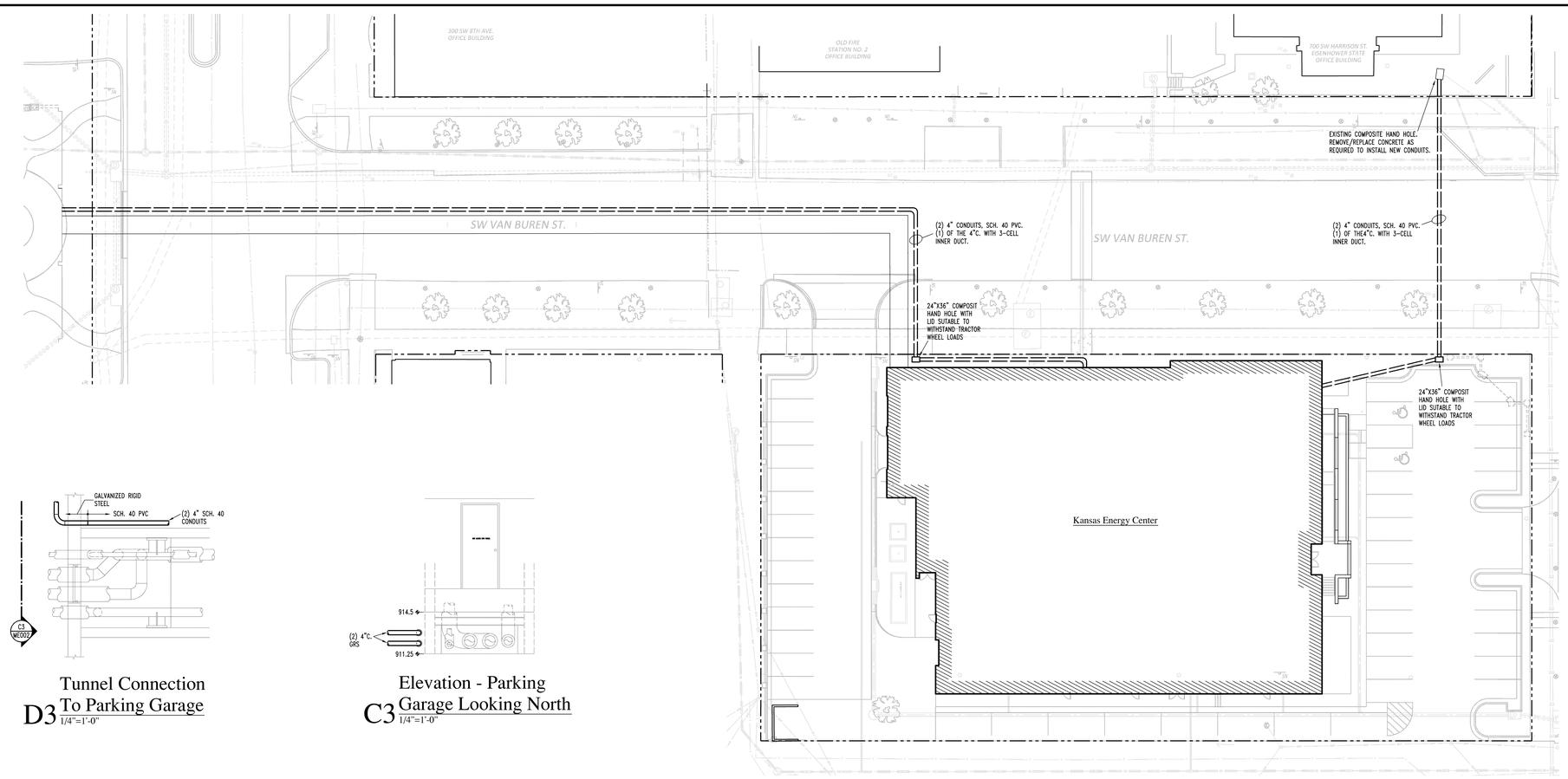

A3 Site Plan
1:20 — Fiber Optic Cabling

N.

FIBER OPTIC CABLING REQUIREMENTS:

- PROVIDE 96 STRAND SM INDOOR/OUTDOOR RISER RATED FIBER CABLE. VERIFY FIBER REQUIREMENTS WITH OWNER.
- FROM DATA ROOM IN BASEMENT OF THE EISENHOWER STATE OFFICE BUILDING RUN THE NEW FIBER CABLE TO THE HAND HOLE LOCATED ON THE EAST SIDE OF THE EISENHOWER STATE OFFICE BUILDING (ESOB) USING EXISTING PATH WAYS.
- FROM THE HAND HOLE TO THE EAST SIDE OF THE ESOB FUN THE NEW FIBER CABLE TO THE DATA ROOM ON THE SECOND FLOOR OF THE NEW KANSAS ENERGY CENTER (KEC) RUN NEW FIBER CABLE IN ON OF THE NEW 4" CONDUITS PROVIDED AS PART OF THIS PROJECT.
- FROM THE NEW DATA ROOM ON THE SECOND FLOOR OF THE KEC EXTEND NEW CABLE TO THE DATA ROOM IN THE NORTH WEST VAULT OF THE KANSAS STATE HOUSE. RUN THE NEW FIBER CABLE IN ONE OF THE NEW 4" CONDUITS INSTALLED AS A PART OF THIS PROJECT AND EXISTING PATHWAYS PREVIOUSLY PROVIDED IN THE KSH.
- FROM THE DATA ROOM IN THE NORTH WEST MECHANICAL VAULT OF THE KSH EXTEND NEW FIBER CABLE TO THE DATA ROOM IN THE SOUTH EAST MECHANICAL VAULT OF THE KSH. RUN THE NEW CABLE IN EXISTING CONDUIT AND WIRE BASKET PREVIOUSLY INSTALLED IN THE KSH.

Tunnel Connection
D3 To Parking Garage
1/4"=1'-0"

Elevation - Parking
C3 Garage Looking North
1/4"=1'-0"

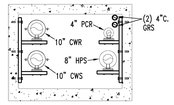

D2 Tunnel Section
1/2"=1'-0"

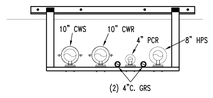

Typical Pipe Support
C2 In Parking Garage
1/4"=1'-0"

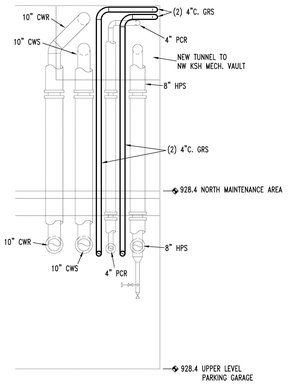

Elevation At South Wall
D1 KSH North Maintenance
1/2"=1'-0"

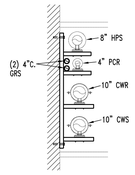

Pipe Support - North
C1 Wall, Parking Garage
1/4"=1'-0"

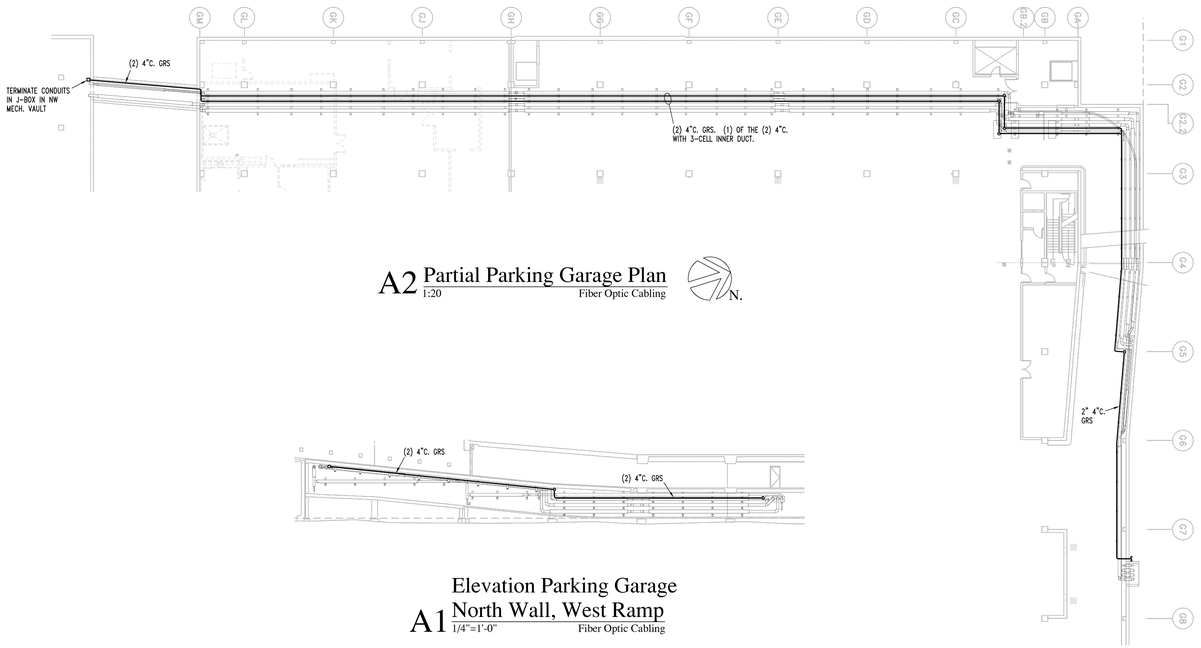

A2 Partial Parking Garage Plan
1:20 — Fiber Optic Cabling

N.

Elevation Parking Garage
A1 North Wall, West Ramp
1/4"=1'-0" — Fiber Optic Cabling

HTK ARCHITECTS PA
9300 W 110TH ST STE 130
OVERLAND PARK KANSAS 66210
P: 913 663 5373
9005 KANSAS AVE
TOPEKA KANSAS 66612
P: 785 266 5373
WWW.HTKARCHITECTS.NET

LS&A
Latimer Sommers & Associates, P.A.
CONSULTING ENGINEERS
3639 SW Summerfield Drive, Suite A
Topeka, Kansas 66614-3974
Telephone: (785) 233-3232
FAX: (785) 233-0547
Email: lsapa@lsapa.com
LSA PROJECT NO. 1402032

WILLIAM R. BASSETT LICENSED 10530 REGISTERED ARCHITECT
4-15-15

DATE:
- 4-15-15

REVISED DATE:
- 12-18-14
- 2-9-15
- 3-10-15

HTK PROJECT NUMBER:
- 1410.03

Department of Administration
Office of Facilities and
Procurement Management
800 SW Jackson, Suite 700
Topeka, Kansas 66612-1216
Phone 785-296-8899
FAX 785-296-3456

STATE OF KANSAS
STATE OF KANSAS ENERGY & SERVICE CENTER
Seventh & Van Buren Street, Topeka, Kansas
BUILDING NUMBER 1730000038
DRAWN BY: CAD
CHECKED BY: WRB
REV: WRB
DATE: 4-15-15

SITE PLAN - FIBER OPTIC CABLING

A-012651

ME102

CONSTRUCTION DOCUMENTS

... ME102.dwg 1 04/14/15 GTC
JCSBC
2-2-2016
AttG--0066

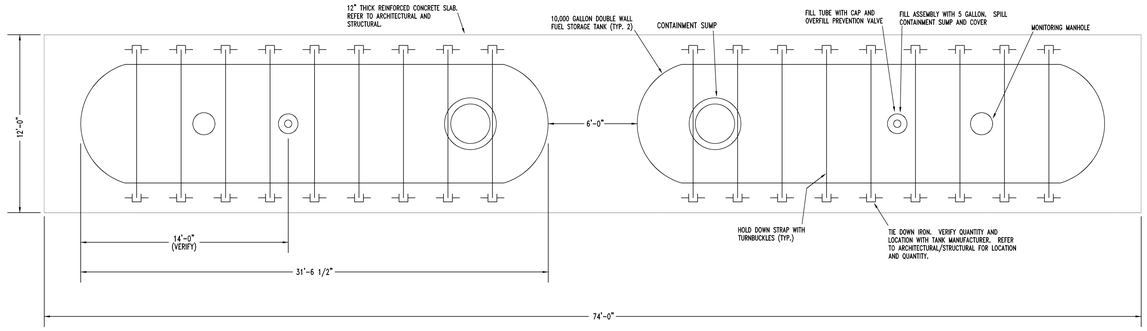

C4 Fuel Oil Storage Tanks
1/4"=1'-0"

ITEM	EQUIPMENT LISTING	ITEM	EQUIPMENT LISTING	ITEM	EQUIPMENT LISTING
A	DOUBLE WALL FIBERGLASS STORAGE TANK	H	DISTINGUISHING LEAK SENSOR	P	MONITORING MANHOLE
B	CONCRETE SLAB	I	HYDROSTATIC MONITOR SENSOR	Q	4" SENSOR CAP
C	HOLD DOWN STRAP WITH TURNBUCKLE ASSY.	J	LARGE ROUND MANHOLE	R	EXTRACTOR ASSEMBLY
D	HYDROSTATIC MONITORING SYSTEM	K	FIVE GALLON SPILL FILL MANHOLE	S	BALL FLOAT
E	42"DIA FIBERGLASS CONTAINMENT COLLAR	L	FILL CAP	T	SINGLE WALL VENT PIPING
F	42"DIA FIBERGLASS 8 SIDED SW CONTAINMENT SUMP WITH 32"DIA WATERTIGHT TOP	M	FILL ADAPTER	U	DOUBLE WALL PRODUCT SUPPLY PIPING
		N	PRODUCT LABEL MARKER		
G	LEVEL PROBE	O	OVERFILL PREVENTION VALVE		

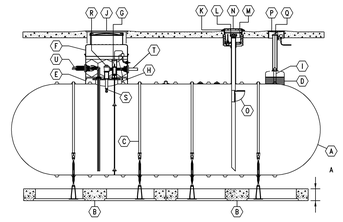

A4 Fuel Oil Storage Tank Connection Detail
No Scale

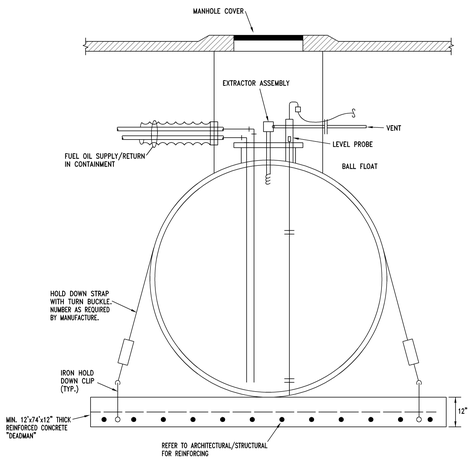

D3 Fuel Oil Storage Tank Elevation
1/2"=1'-0"

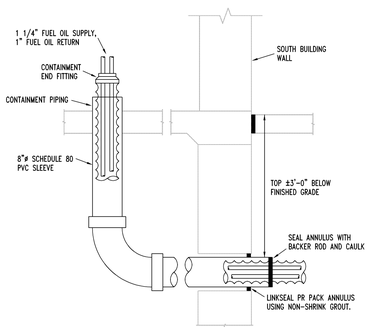

B3 Building Entrance - Fuel Oil Piping
1/4"=1'-0"

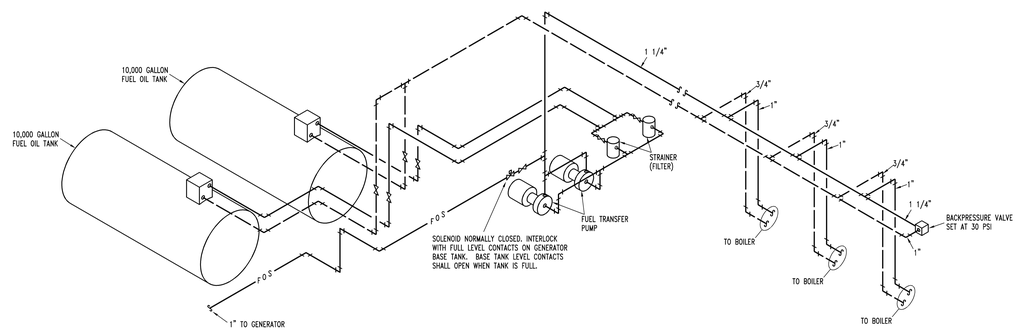

C1 Fuel Oil Piping Schematic
No Scale

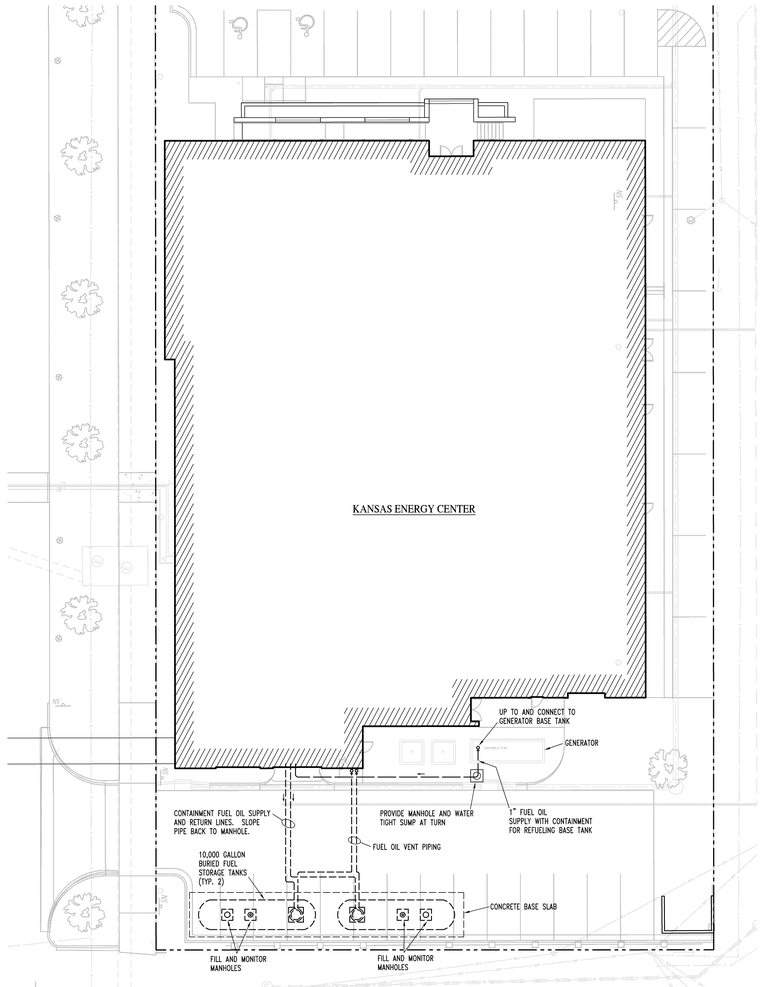

A1 Partial Site Plan
1/16"=1'-0" Fuel Oil Storage Tanks

HTK ARCHITECTS PA
9300 W 110TH ST STE 130
OVERLAND PARK KANSAS 66210
P: 913 663 5373
9105 KANSAS AVE
TOPEKA KANSAS 66612
P: 785 266 5373
WWW.HTKARCHITECTS.NET

LS&A
Latimer Sommers & Associates, P.A.
CONSULTING ENGINEERS
3639 SW Summerfield Drive, Suite A
Topeka, Kansas 66614-3974
Telephone: (785) 233-3232
FAX: (785) 233-0647
Email: lsapa@lsapa.com
LSA PROJECT NO. 1402032

WILLIAM R. BASSETT LICENSED 10530 REGISTERED ENGINEER
4.15.15

DATE:
- 4-15-15

REVISED DATE:
- 12-18-14
- 2-9-15
- 3-10-15
-

HTK PROJECT NUMBER:
- 1410.03

Department of Administration
Office of Facilities and
Procurement Management
800 SW Jackson, Suite 700
Topeka, Kansas 66612-1216
Phone 785-296-8899
FAX 785-296-3456

STATE OF KANSAS
STATE OF KANSAS ENERGY & SERVICE CENTER
Seventh & Van Buren Street, Topeka, Kansas
BUILDING NUMBER 173000-00038

DATE: 4-15-15 | DRAWN BY: CAD | CHECKED BY: WRB | REV: WRB

PARTIAL SITE PLAN - FUEL STORAGE TANKS

A-012651

ME103

CONSTRUCTION DOCUMENTS

JCSBC
2-2-2016
AtL9G..=0067

EXISTING EQUIPMENT SCHEDULE

MARK	DESCRIPTION	MANUFACTURER	MODEL NUMBER	MINIMUM COOLING TONS	EVAPORATOR OR COIL GPM	EVAPORATOR OR COIL PRESSURE DROP	EVAPORATOR OR COIL ENTERING WATER TEMP/ LEAVING WATER TEMP	CONDENSER GPM	CONDENSER PRESSURE DROP	CONDENSER ENTERING WATER TEMP/ LEAVING WATER TEMP	HEAT RECOVERY GPM	HEAT RECOVERY PRESSURE DROP	HEAT RECOVERY ENTERING WATER TEMP/ LEAVING WATER TEMP	PUMP GPM/ FAN CFM	TOTAL HEAD OR STATIC PRESSURE	ELECTRICAL CHARACTERISTICS					REMARKS
																KW/HP	MINIMUM * CIRCUIT AMPS	MAXIMUM OVERCURRENT PROTECTION	PHASE	VOLTAGE	
CHILLER 1	EXISTING HEAT RECOVERY CHILLER LOCATED IN DSOB	TRANE	CVHE 0360	400.0 TONS	800	14.2'	54°F/42°F	1144	18.05'	85°F/95°F	800	9'	96°F/109°F	N/A	N/A	253.7 KW	490A	800A	3	460 VOLT	2
CHILLER 2	EXISTING HEAT RECOVERY CHILLER LOCATED IN DSOB	TRANE	CVHE 0360	400.0 TONS	800	14.2'	54°F/42°F	1144	18.05'	85°F/95°F	800	9'	96°F/109°F	N/A	N/A	253.7 KW	490A	800A	3	460 VOLT	2
CHILLER 3	EXISTING HEAT RECOVERY CHILLER LOCATED IN DSOB	TRANE	CVHE 0360	400.0 TONS	800	14.2'	54°F/42°F	1144	18.05'	85°F/95°F	800	9'	96°F/109°F	N/A	N/A	253.7 KW	490A	800A	3	460 VOLT	3
EFDR-1	REFRIGERATOR ROOM EXHAUST FAN	GREENHECK	BCF 110	--	--	--	--	--	--	--	--	--	--	3500 CFM	.5" WG	3/4 HP	1.6 FLA	20A	3	460 VOLT	2
PCHWP-1	EXISTING PRIMARY CHILLED WATER PUMP	BELL & GOSSETT	SERIES VSC, 6x8x10-1/2A	--	--	--	--	--	--	--	--	--	--	2000 GPM	90'	60 HP	77 FLA	110A	3	460 VOLT	2
PCHWP-2	EXISTING PRIMARY CHILLED WATER PUMP	BELL & GOSSETT	SERIES VSC, 6x8x10-1/2A	--	--	--	--	--	--	--	--	--	--	2000 GPM	90'	60 HP	77 FLA	110A	3	460 VOLT	2
PCHWP-3	EXISTING PRIMARY CHILLED WATER PUMP	BELL & GOSSETT	SERIES VSC, 6x8x10-1/2A	--	--	--	--	--	--	--	--	--	--	2000 GPM	90'	60 HP	77 FLA	110A	3	460 VOLT	--

REMARKS:
1. 2-SPEED MOTOR, 2000 CFM LOW SPEED. PROVIDE MOTORIZED DAMPER IN EXHAUST DISCHARGE DUCTWORK.
2. HARVEST FROM DSOB SUB BASEMENT.
3. HARVEST FROM ESOB BASEMENT.

*OR FULL LOAD AMPS (FLA)

STOP VALVE SCHEDULE

SYSTEM STOP VALVE	TYPE	SIZE	BODY MATERIAL	BONNET/ PACKING GLAND DESIGN	DISC/BALL MATERIAL	STEM MATERIAL	PACKING MATERIAL LAND SEATS	PRESSURE RATING	REMARKS
DOMESTIC WATER	BALL FULL PORT	1/2" TO 2 1/2"	BRONZE, B-584 OR B-62 BRONZE	ADJUSTABLE WITHOUT REMOVING HANDLE	STAINLESS STEEL	STAINLESS STEEL	REINFORCED TEFLON	600 PSI CWP	PROVIDE THREADED OR SOLDERED ENDS AS REQUIRED BY PIPING SYSTEM
HEATING HOT WATER	BALL FULL PORT	1/2" TO 2 1/2"	BRONZE, B-584 OR B-62 BRONZE	ADJUSTABLE WITHOUT REMOVING HANDLE	STAINLESS STEEL	STAINLESS STEEL	REINFORCED TEFLON	600 PSI CWP	PROVIDE THREADED OR SOLDERED ENDS AS REQUIRED BY PIPING SYSTEM
HEATING HOT WATER	BUTTERFLY	3" AND UP	CAST OR DUCTILE IRON	FULL LUG BODY	STAINLESS STEEL	STAINLESS STEEL	EPDM	200 PSI CWP	FULL LUG BODY, STAINLESS STEEL TRIM, BRAY OR APPROVED EQUAL
COOLING CHILLED WATER	BALL FULL PORT	1/2" TO 2 1/2"	BRONZE, B-584 OR B-62 BRONZE	ADJUSTABLE WITHOUT REMOVING HANDLE	STAINLESS STEEL	STAINLESS STEEL	REINFORCED TEFLON	600 PSI CWP	PROVIDE THREADED OR SOLDERED ENDS AS REQUIRED BY PIPING SYSTEM
COOLING CHILLED WATER	BUTTERFLY	3" AND UP	CAST OR DUCTILE IRON	FULL LUG BODY	STAINLESS STEEL	STAINLESS STEEL	EPDM	200 PSI CWP	FULL LUG BODY, STAINLESS STEEL TRIM, BRAY OR APPROVED EQUAL
COMPRESSED AIR	BALL	1/2" TO 2 1/2"	CAST CARBON STEEL TWO PIECE, (4) BOLT DESIGN	ADJUSTABLE WITHOUT REMOVING HANDLE	STAINLESS STEEL	STAINLESS STEEL	REINFORCED TEFLON	250 PSI STEAM SERVICE	TREADED ENDS
CONDENSER WATER	GATE	3" AND UP	DUCTILE IRON	BOLTED BONNET OS AND Y DESIGN	DUCTILE IRON	STEEL	TFE-ARAMID	CLASS 150	FLANGED CONNECTIONS, STAINLESS STEEL TRIM
LOW PRESSURE STEAM	BALL	1/2" TO 2 1/2"	CAST CARBON STEEL TWO PIECE, (4) BOLT DESIGN	ADJUSTABLE WITHOUT REMOVING HANDLE	STAINLESS STEEL	STAINLESS STEEL	REINFORCED TEFLON	250 PSI STEAM SERVICE	THREADED ENDS
LOW PRESSURE STEAM	GATE	3" AND UP	DUCTILE IRON	BOLTED BONNET OS & Y DESIGN	DUCTILE IRON		TFE-ARAMID	CLASS 150	FLANGED CONNECTIONS, STAINLESS STEEL TRIM
HIGH PRESSURE STEAM	BALL	1/2" TO 2 1/2"	CAST CARBON STEEL TWO PIECE, (4) BOLT DESIGN	ADJUSTABLE WITHOUT REMOVING HANDLE	STAINLESS STEEL	STAINLESS STEEL	REINFORCED TEFLON	250 PSI STEAM SERVICE	THREADED ENDS
HIGH PRESSURE STEAM	GATE	3" AND UP	STEEL BODY	BOLTED BONNET OS & Y DESIGN	STEEL		TFE-ARAMID	CLASS 300	FLANGED CONNECTIONS, STAINLESS STEEL TRIM
GRAVITY CONDENSATE RETURN	BALL	1/2" TO 2 1/2"	CAST CARBON STEEL TWO PIECE, (4) BOLT DESIGN	ADJUSTABLE WITHOUT REMOVING HANDLE	STAINLESS STEEL	STAINLESS STEEL	REINFORCED TEFLON	250 PSI STEAM SERVICE	THREADED ENDS
GRAVITY CONDENSATE RETURN	GATE	3" AND UP	DUCTILE IRON	BOLTED BONNET OS & Y DESIGN	DUCTILE IRON		TFE-ARAMID	CLASS 150	FLANGED CONNECTIONS, STAINLESS STEEL TRIM
PUMPED CONDENSATE RETURN	BALL	1/2" TO 2 1/2"	CAST CARBON STEEL TWO PIECE, (4) BOLT DESIGN	ADJUSTABLE WITHOUT REMOVING HANDLE	STAINLESS STEEL	STAINLESS STEEL	REINFORCED TEFLON	250 PSI STEAM SERVICE	THREADED ENDS
PUMPED CONDENSATE RETURN	GATE	3" AND UP	DUCTILE IRON	BOLTED BONNET OS & Y DESIGN	DUCTILE IRON		TFE-ARAMID	CLASS 150	FLANGED CONNECTIONS, STAINLESS STEEL TRIM
CONDENSER WATER	BUTTERFLY								
CHILLED WATER	BALL								
CHILLED WATER	BUTTERFLY								
HOT WATER	BALL								
HOT WATER	BUTTERFLY								

NOTES:
1. ALL GATE VALVES IN MECHANICAL SPACES LOCATED AT ELEVATIONS ABOVE 9'-0" SHALL BE PROVIDED WITH CHAIN OPERATOR.
2. BUTTERFLY VALVES IN SIZE 3" THROUGH 6" SHALL BE PROVIDED WITH LEVER OPERATOR.
3. BUTTERFLY VALVES IN SIZES ABOVE 6" SHALL BE PROVIDED WITH GEAR OPERATORS.

BALANCE VALVES

SYSTEM	MANUFACTURER	MODEL	SIZE	BODY MATERIAL	TRIM	PRESSURE RATING	REMARKS
DOMESTIC WATER	BELL & GOSSET	CB-F	2 1/2" THRU 3 1/2"	CAST IRON	BRASS BALL	175 PSIG	THREADED ENDS
HOT WATER	BELL & GOSSET	CB-F	2 1/2" THRU 3 1/2"	CAST IRON	BRASS BALL	175 PSIG	THREADED ENDS
CHILLED WATER	BELL & GOSSET	CB-F	4" THRU 12"	FLANGED CAST IRON	BRASS DISC STAINLESS STEEL VALVE	175 PSIG	FLANGED ENDS
DOMESTIC WATER	BELL & GOSSET	CB	1 1/4" - 2"	BRONZE	·	·	·
CHILLED WATER	BELL & GOSSET	CB	1 1/4" - 2"	BRONZE	·	·	·
HOT WATER							

NOTES:
1. NO EQUIVALENTS ACCEPTED.

CHECK VALVE SCHEDULE

SYSTEM CHECK VALVES	TYPE	SIZE	BODY MATERIAL	CAP DESIGN	DISC MATERIAL	PRESSURE RATING AT 350°F	REMARKS
DOMESTIC WATER	"Y" PATTERN SWING CHECK	1/2" TO 2 1/2"	BRONZE, B-62 BRONZE	THREADED	BRONZE	CLASS 150	THREADED ENDS
HEATING HOT WATER	"Y" PATTERN SWING CHECK	1/2" TO 2 1/2"	BRONZE, B-62 BRONZE	THREADED	BRONZE	CLASS 150	THREADED ENDS
HEATING HOT WATER	FLANGE	3" AND UP	STEEL	NA	STAINLESS STEEL	CLASS 150	
COOLING CHILLED WATER	"Y" PATTERN SWING CHECK	1/2" TO 2 1/2"	BRONZE, B-62 BRONZE	THREADED	BRONZE	CLASS 150	THREADED ENDS
COOLING CHILLED WATER	FLANGE	3" AND UP	STEEL	NA	STAINLESS STEEL	CLASS 150	
CONDENSER WATER	FLANGE	3" AND UP	STEEL	NA	STAINLESS STEEL	CLASS 150	
GRAVITY CONDENSATE RETURN	STRAIGHT PATTERN SPRING LOADED	1/2" TO 2 1/2"	STAINLESS STEEL	THREADED	STAINLESS STEEL	250 PSI	THREADED ENDS, 1
GRAVITY CONDENSATE RETURN	STRAIGHT PATTERN SPRING LOADED	3" AND UP	STAINLESS STEEL	THREADED	STAINLESS STEEL	250 PSI	WAFFER STYLE
PUMPED CONDENSATE RETURN	STRAIGHT PATTERN SPRING LOADED	1/2" TO 2 1/2"	STAINLESS STEEL	THREADED	STAINLESS STEEL	250 PSI	THREADED ENDS, 1
PUMPED CONDENSATE RETURN	STRAIGHT PATTERN SPRING LOADED	3" AND UP	STAINLESS STEEL	THREADED	STAINLESS STEEL	250 PSI	WAFFER STYLE

REMARKS:
1. DURABLE OR IFC NO OTHER EQUIVALENTS ACCEPTED.

MAKE-UP AIR UNIT SCHEDULE

MARK	MANUFACTURER	MODEL NUMBER	LOCATION	CFM	ESP	TST	HEATING	STEAM FLOW	EAT/LAT	ELECTRICAL CHARACTERISTICS	REMARKS
MUA B-1	GREENHECK	MSX-115-H22	BOILER ROOM	5600	.5"	.84	404.5 MBH	422#/HR	1/67	460 VAC 3PH., 3 HP.	·
MUA B-2	GREENHECK	MSX-115-H22	BOILER ROOM	5600	.5"	.84	404.5 MBH	422#/HR	1/67	460 VAC 3PH., 3 HP.	·
MUA B-3	GREENHECK	MSX-115-H22	BOILER ROOM	5600	.5"	.84	404.5 MBH	422#/HR	1/67	460 VAC 3PH., 3 HP.	·
MUA C-1	GREENHECK	MSX-115-H22	CHILLER ROOM	5600	.5"	.84	404.5 MBH	422#/HR	1/67	460 VAC 3PH., 3 HP.	·
MUA S-1	GREENHECK	MSX-118-H32	SHOP	7000	·	·	516.5 MBH	538#/HR	1/69	460 VAC 3PH., 3 HP.	·
·	·	·		·	·	·	·	·	·	·	·

NOTES:
1. PROVIDE DISTRIBUTING STEAM COIL.
2. STEAM PRESSURE 5 PSIG.

STEAM PRESSURE REDUCING STATION SCHEDULE

MARK	MANUFACTURER	MODEL NUMBER	INLET PRESSURE	OUTLET PRESSURE	REQUIRED CAPACITY (#/HR)	REMARKS
PRV-1	LESLIE	GPKP-3"	80 PSI	8 PSI	6180#/HR	125# FLANGES
PRV-2	LESLIE	GPKP-3"	80 PSI	10 PSI	6180#/HR	125# FLANGES
PRV-3	LESLIE	GPKP-1 1/2"	80 PSI	12 PSI	3090#/HR	125# FLANGES

NOTES:
1. VALVES SHALL BE PILOT ACTIVATED.

RELIEF VALVE SCHEDULE

MARK	MANUFACTURER	MODEL NUMBER	CAPACITY AT RELIEF SETTING	RELIEF SETTING	ORIFICE	DISCHARGE LINE FROM DRIP PAN ELL	REMARKS
RV-1	KNUCKLE	6252	13550	25 PSIG	"P" - 4"x6"	8"	PROVIDE DRIP PAN ELL
RV-2	KNUCKLE	6252	13550	25 PSIG	"P" - 4"x6"	8"	PROVIDE DRIP PAN ELL
RV-3	KNUCKLE	6252	9217	25 PSIG	"N" - 4"x6"	8"	PROVIDE DRIP PAN ELL

HTK ARCHITECTS PA
9300 W 110TH ST STE 130
OVERLAND PARK KANSAS 66210
P: 913 663 5373
WWW.HTKARCHITECTS.NET

LS&A Latimer Sommers & Associates, P.A.
CONSULTING ENGINEERS
3639 SW Summerfield Drive, Suite A
Topeka, Kansas 66614-3974
Telephone: (785) 233-3232
FAX: (785) 233-0647
Email: lsapa@lsapa.com
LSA PROJECT NO. 1402032

WILLIAM R. BASSETT LICENSED 10530 PROFESSIONAL ENGINEER
4-15-15

DATE:
- 4-15-15

REVISED DATE:
- 12-18-14
- 2-9-15
- 3-10-15
-

HTK PROJECT NUMBER:
- 1410.03

Department of Administration
Office of Facilities and
Procurement Management
800 SW Jackson, Suite 700
Topeka, Kansas 66612-1216
Phone 785-296-8899
FAX 785-296-3456

STATE OF KANSAS
STATE OF KANSAS ENERGY & SERVICE CENTER
Seventh & Van Buren Street, Topeka, Kansas
BUILDING NUMBER 1730000038
DATE: 4-15-15 DRAWN BY: CAD CHECKED BY: WRB REV: WRB

MECHANICAL SCHEDULES

A-012651

ME201

CONSTRUCTION DOCUMENTS

JCSBC
2-2-2016
Att.9G.--0068

...ME201_02_03_04_Mechanical Schedules.dwg 96 04/15/15 CTC CTC CTC EAN EAN EAN

PIPING MATERIAL SCHEDULE

SYSTEM	PIPING						FITTINGS		MAXIMUM WORKING		MAXIMUM WORKING	
	SIZE	TYPE	SCHEDULE	GRADE	ASTM	MATERIAL	MATERIAL	TYPE	PRESSURE (PSI)	TEMP (°F)	HYDRO STATIC PRESSURE (PSI)	TIME
HIGH PRESSURE STEAM	2" – 8"	ERW	40	–	A-53	CS BLK	CS	W	120	350	200	1 HR
LOW PRESSURE STEAM	1 1/2" – 2"	SL	40	–	A-53	CS BLK	CS	T	15	235	50	1 HR
LOW PRESSURE STEAM	2 1/2" – 8"	ERW	40	–	A-53	CS BLK	CS	W	15	235	50	1 HR
RELIEF VENT	1 1/2" – 2"	SL	40	–	A-53	CS BLK	CS	T	125	350	200	1 HR
RELIEF VENT	2" – 8"	ERW	40	–	A-53	CS BLK	CS	W	125	350	200	1 HR
STEAM CONDENSATE RETURN	1 1/2 – 2"	SL	80	–	A-53	CS BLK	CS	T	50	300	100	1 HR
STEAM CONDENSATE RETURN	2 1/2" – 6"	ERW	80	–	A-53	CS BLK	CS	W	50	300	100	1 HR
DRAIN PIPING	1/2" – 2 1/2"	L	–	–	B-88	CP	CP	SJ	0	200	15	1 HR
DRAIN PIPING	3" AND UP	L	–	–	B-88	CP	CP	V	0	200	15	1 HR
DOMESTIC COLD WATER	1/2"–6"	L	–	–	B-88	CP	CP	SJ	85	40 TO 65	150	1 HR
DOMESTIC HOT WATER	1/2"–6"	L	–	–	B-88	CP	CP	SJ	85	40 TO 65	150	1 HR
COMPRESSED AIR	1/2"–2 1/2"	L	–	–	B-88	CP	CP	B	150	80	175	1 HR
COMPRESSED AIR	3"–4"	ERW	40	–	A-53	CS	CS	W	150	80	175	1 HR
NATURAL GAS	ALL	ERW	40	–	A-53	CS	CS	W	10 PSIG	90	100	1 HR
HOT WATER	1/2"–2 1/2"	L	–	–	B-88	CP	CP	SJ	150	180	200	1 HR
HOT WATER	3" AND ABOVE	ERW	40	–	A-53	CS	CS	W	150	180	200	1 HR
CHILLED WATER	1/2"–2 1/2"	L	–	–	B-88	CP	CP	SJ	150	55	200	1 HR
CHILLED WATER	3" AND ABOVE	ERW	40	–	A-53	CS	CS	W	150	55	200	1 HR
CONDENSER WATER	5" AND ABOVE	CPVC	80	–	A-53	CPVC	CPVC	SW	75	95	150	1 HR

ABBREVIATIONS:

ACR – AIR CONDITIONING REFRIGERANT
BLK – BLACK
BS – BELL AND SPIGOT
CI – CAST IRON
CP – COPPER
CS – CARBON STEEL
DI – DUCTILE IRON
ERW – ELECTRIC RESISTANT WELD
F – FUSION WELD
GLV – GALVANIZED
MECH – MECHANICAL
MI – MALLEABLE IRON
MJ – MECHANICAL JOINT
NG – NEOPRENE GASKET
NH – NO HUB
P (PVC) – POLYVINYL CHLORIDE
PC – ROLLED GROOVED PIPE COUPLING
PE – POLYETHYLENE
PP – POLYPROPYLENE
S – SOCKET JOINT
SJ – SOLDER JOINT 95–5 TIN–ANTIMONY
SL – SEAMLESS
SS – SILVER SOLDER
SV – SERVICE WEIGHT
SW – SOLVENT WELD
T – THREADED
V – VICTUALIC
W – WELDED

NOTES:
1. "T" DRILL COPPER "TEES" WILL NOT BE PERMITTED.
2. "WELD–O–LETS" AND "THREAD–O–LETS" CAN BE USED FOR PIPING TAKE OFFS PROVIDED THE BRANCH LINE FOR WHICH EACH IS USED IS A MAXIMUM SIZE OF 1.
3. PIPE SIZE SMALLER THEN 1/2 OF THE MAIN SIZE OF WHICH IT CONNECTS.
4. THE OWNER RESERVES THE RIGHT TO "X–RAY" ANY WELD PROVIDED BY THE CONTRACTOR. THE CONTRACTOR SHALL REPAIR AND WELD THAT FAILS TO PASS THE "X–RAY" PROCESS WITH NO ADDITIONAL COST TO THE OWNER. COST ASSOCIATED WITH X–RAY OF THE WELD AFTER REPAIRS HAVE BEEN MADE, TO PROVIDE THE ACCEPTABILITY OF THE WELD, SHALL BE BY THE CONTRACTOR.
5. ALL PIPING SHALL PASS PRESSURE TESTING PRIOR TO THE INSTALLATION OF INSULATION.
6. ALL FLANGES IN COPPER PIPING SYSTEMS SHALL BE RATED MINIMUM 150 PSI. NORMAL WORKING PRESSURE.
7. PIPE FLANGE GASKETS
   a. GASKETS FOR STEAM, STEAM CONDENSATE RETURN SHALL BE SPIRAL WOULD AS MANUFACTURED BY "FLEXITALLICTAULIC".
   b. GASKETS FOR CHILLED WATER AND HOT WATER SYSTEMS SHALL BE FULL FACE ASBESTOS FREE TYPE.
8. ALL GASKETS SHALL BE SPIRAL WOUND AND SHALL BE MANUFACTURED BY FLEXITALLIC.
9. ALL PIPE NIPPLES IN STEEL PIPING SHALL BE SCHEDULE 80 STEEL.

PIPING INSULATION SCHEDULE

SYSTEM	SIZE	TYPE	THICKNESS	JACKET	REMARKS
DOMESTIC COLD WATER	1/2" THRU 1"	1–PHC	1/2"	ASJ	–
DOMESTIC COLD WATER	1 1/4" THRU 2"	1–PHC	1/2"	ASJ	–
DOMESTIC COLD WATER	2 1/2" AND UP	1–PHC	1/2"	ASJ	–
CONDENSATE DRAIN	ALL SIZES	1–PHC	1/2"	ASJ	–
HEATING HOT WATER	1/2" – 3 1/2"	1–PHC	1"	ASJ	–
HEATING HOT WATER	4" AND UP	1–PHC	1 1/2"	ASJ	–
COOLING CHILLED WATER	1/2" – 1 1/4"	1–PHC	1/2"	ASJ	–
COOLING CHILLED WATER	1 1/2" – 4"	1–PHC	1"	ASJ	–
COOLING CHILLED WATER	5" AND UP	1–PHC	1 1/2"	ASJ	–
AIR SEPARATORS	–	1–EC	3/4"	–	1
STRAINERS	–	1–EC	3/4"	–	1
EXPANSION TANKS	–	1–EC	3/4"	–	1
DOMESTIC COLD WATER AND CHILLED WATER SYSTEM VALVES	–	1–EC	3/4"	–	1
HIGH PRESSURE STEAM	6" AND UP	1–PHC	3 1/2"	ASJ	1
HIGH PRESSURE STEAM	4"	1–PHC	2 1/2"	ASJ	2
CONDENSATE RETURN	4"	1–PHC	2"	ASJ	2
CONDENSATE RETURN	3"	1–PHC	2"	ASJ	2
CONDENSATE RETURN	2"	1–PHC	1 1/2"	ASJ	2
HOT WATER					

NOTES:
1. DURABLE OR IFC NO OTHER EQUIVALENTS ACCEPTED.

ABBREVIATIONS:
1–EC = FLEXIBLE CELLULAR FOAM, SHEET STOCK
1–PCH = PRE–MOLDED FIBERGLASS PIPE INSULATION.
ASJ = ALL SERVICE JACKET.

REMARKS:
1. PROVIDE WHITE LACQUER PAINT FINISH.
2. PROVIDE 0.016" THICK ALUMINUM INSULATION JACKETING ON ALL STEAM AND CONDENSATE PIPING IN TUNNEL.

GRILLES, REGISTERS AND DIFFUSER SCHEDULE

MARK	MANUFACTURER	APPLICATION	DESCRIPTION	FINISH
Ⓐ	PRICE TBDI4100	LINEAR SLOT–SUPPLY	24" (1) 1" SLOTS 1–WAY BLOW 8" HIGH INSULATED PLENUM	OFF WHITE
Ⓑ	PRICE TBDI4100	LINEAR SLOT–SUPPLY	48" (2) 1" SLOTS 2–WAY BLOW 8" HIGH INSULATED PLENUM	OFF WHITE
Ⓒ	PRICE TBDI4100	LINEAR SLOT–SUPPLY	48" (2) 1" SLOT 2–WAY BLOW 11" HIGH INSULATED PLENUM	OFF WHITE
Ⓓ	PRICE TBDI4100	LINEAR SLOT–SUPPLY	24" (2) 1" SLOTS 2–WAY BLOW 11" HIGH INSULATED PLENUM	OFF WHITE
Ⓔ	PRICE TBDI4100	LINEAR SLOT–SUPPLY	48" (4) 1" SLOTS 2–WAY BLOW 11" HIGH INSULATED PLENUM	OFF WHITE
Ⓕ	PRICE SMD/3P/SR	SQUARE LOUVERED FACE SUPPLY	24"x24" CEILING PANEL WITH DROP–IN SQUARE DIFFUSER AND SQUARE–TO–ROUND ADAPTOR	OFF WHITE
Ⓖ	PRICE 535	LOUVERED RETURN	STEEL RETURN, 1/2" BLADE SPACING, NO SCREWHOLES	OFF WHITE
Ⓗ	PRICE 535	LOUVERED RETURN/EXHAUST	STEEL RETURN, 1/2" BLADE SPACING	OFF WHITE
Ⓙ	PRICE 96	RELIEF GRILLE	HEAVY DUTY GYM GRILLE 45° DEFLECTION, 3/4" BLADE SPACING	OFF WHITE
Ⓚ	PRICE 635	LOUVERED RETURN/EXHAUST	ALUMINUM RETURN, 1/2" BLADE SPACING	OFF WHITE
Ⓛ	PRICE 520	SUPPLY GRILLE	DOUBLE DEFLECTION, STEEL	OFF WHITE

FAN COIL UNIT SCHEDULE

MARK	MFR.	MODEL NUMBER	CFM	O/A CFM	ESP W.C.	TSP W.C.	FAN HP	COOLING CAPACITY								HEATING CAPACITY							ELECTRICAL VOLTS/PH	REMARKS
								EAT	LAT	TMBH	SMBH	GPM	EWT	WPD	ROWS	MBH	EAT	LAT	EWT	GPM	WPD	ROWS		
FCU–1	TRANE	FCDB04	295	–	.25	·	1/4	78/65	57	8.0	6.23	2.0	44	6.4	3	12.61	70	109	180	1.0	2.6	1	277V./1PH.	1–10
FCU–2	TRANE	FCDB04	295	–	.25	·	1/4	78/65	57	8.0	6.23	2.0	44	6.4	3	12.61	70	109	180	1.0	2.6	1	277V./1PH.	1–10
FCU–3	TRANE	FCDB08	560	–	.25	·	1/4	78/65	57	14.88	11.55	4.0	44	6.9	3	25.0	70	110	180	2.0	13.7	1	277V./1PH.	1–10
FCU–4	TRANE	FCDB08	560	–	.25	·	1/4	78/65	57	14.88	11.55	4.0	44	6.9	3	25.0	70	110	180	2.0	13.7	1	277V./1PH.	1–10
FCU–5	TRANE	FCDB08	560	–	.25	·	1/4	78/65	57	14.88	11.55	4.0	44	6.9	3	25.0	70	110	180	2.0	13.7	1	277V./1PH.	1–10
FCU–6	TRANE	FCDB020	190	–	.25	·	1/4	78/65	57	4.77	3.84	1.25	44	2.45	3	8.5	70	111	180	.75	1.35	1	277V./1PH.	1–10
FCU–7	TRANE	FCDB04	295	–	.25	·	1/4	78/65	57	8.0	6.23	2.0	44	6.4	3	12.61	70	109	180	1.0	2.6	1	277V./1PH.	1–10
FCU–8	TRANE	FCDB030	235	–	.25	·	1/4	78/65	57	5.66	4.59	1.5	44	3.4	3	10.12	70	109	180	1.0	2.2	1	277V./1PH.	1–10
FCU–9	TRANE	FCDB030	235	–	.25	·	1/4	78/65	57	5.66	4.59	1.5	44	3.4	3	10.12	70	109	180	1.0	2.2	1	277V./1PH.	1–10
FCU–10	TRANE	FCDB08	560	–	.25	·	1/4	78/65	57	14.88	11.55	4.0	44	6.9	3	25.0	70	110	180	1.0	13.7	1	277V./1PH.	1–10
FCU–11	TRANE	FCDB030	235	–	.25	·	1/4	78/65	57	5.66	4.59	1.5	44	3.4	3	10.12	70	109	180	1.0	2.2	1	277V./1PH.	1–10
FCU–12	TRANE	FCDB030	235	–	.25	·	1/4	78/65	57	5.66	4.59	1.5	44	3.4	3	10.12	70	109	180	1.0	2.2	1	277V./1PH.	1–10
FCU–13	TRANE	FCDB030	235	–	.25	·	1/4	78/65	57	5.66	4.59	1.5	44	3.4	3	10.12	70	109	180	1.0	2.2	1	277V./1PH.	1–10
FCU–14	TRANE	FCDB030	235	–	.25	·	1/4	78/65	57	5.66	4.59	1.5	44	3.4	3	10.12	70	109	180	1.0	2.2	1	277V./1PH.	1–10
FCU–15	TRANE	FCDB04	295	–	.25	·	1/4	78/65	57	5.66	6.23	2.0	44	6.4	3	12.61	70	109	180	1.0	2.6	1	277V./1PH.	1–10
FCU–16	TRANE	FCDB030	235	–	.25	·	1/4	78/65	57	5.66	4.59	1.5	44	3.4	3	10.12	70	109	180	1.0	2.2	1	277V./1PH.	1–10
FCU–17	TRANE	FCDB08	560	–	.25	·	1/4	78/65	57	14.88	11.55	4.0	44	6.9	3	25.0	70	110	180	2.0	13.7	1	277V./1PH.	1–10
FCU–18	TRANE	FCDB030	235	–	.25	·	1/4	78/65	57	5.66	4.59	1.5	44	3.4	3	10.12	70	109	180	1.0	2.2	1	277V./1PH.	1–10

REMARKS:
1. HORIZONTAL CABINET.
2. BOTTOM STAMPED RETURN LOUVER.
3. FRONT BAR GRILLE SUPPLY.
4. ECM FAN MOTOR.
5. MANUAL AIR VENT.
6. 1" MERV 8 FILTER.
7. 277V. 1PH. OPERATION.
8. PIPING BY CONTRACTOR.
9. CONTROL VALVE BY ATC.
10. STAINLESS STEEL DRAIN PAN.

VAV TERMINAL UNIT SCHEDULE

MARK	MANUFACTURER	MODEL NUMBER	SIZE		COOLING CFM		HOT WATER REHEAT COIL										ELEC	REMARKS
			INLET	OUTLET	MAX	MIN	HEATING CFM	HEAT MBH	EAT	LAT	MAX AIR ΔP	GPM	EWT	LWT	WATER ΔP	ROWS		
V1	PRICE	SDV5	4"	12"x8"	130	60	65	3.8	55	107.1	0.02	0.5	180	164.5	0.15	1	277/1	1–3
V2	PRICE	SDV5	5"	12"x8"	140	65	70	4.0	55	105.5	0.02	0.5	180	163.8	0.15	1	277/1	1–3
V3	PRICE	SDV5	4"	12"x8"	130	60	65	3.8	55	107.1	0.02	0.5	180	164.5	0.15	1	277/1	1–3
V4	PRICE	SDV5	5"	12"x8"	280	65	130	6.2	55	97.6	0.08	1.0	180	167.3	0.45	1	277/1	1–3
V5	PRICE	SDV5	5"	12"x8"	165	65	100	4.8	55	97.9	0.03	0.5	180	160.3	0.15	1	277/1	1–3
V6	PRICE	SDV5	4"	12"x8"	180	60	90	4.5	55	100.1	0.04	0.5	180	161.4	0.15	1	277/1	1–3
V7	PRICE	SDV5	6"	12"x8"	340	70	170	7.7	55	95.7	0.11	2.0	180	172.1	1.35	1	277/1	1–3
V8	PRICE	SDV5	5"	12"x8"	165	65	100	4.8	55	97.9	0.03	0.5	180	160.3	0.15	1	277/1	1–3
V9	PRICE	SDV5	5"	12"x8"	165	65	100	4.8	55	97.9	0.03	0.5	180	160.3	0.15	1	277/1	1–3
V10	PRICE	SDV5	14"	20"x17.5"	1410	440	800	55.3	55	116.9	0.27	4.0	180	151.7	2.21	2	277/1	1–3
V11	PRICE	SDV5	7"	12"x10"	480	100	240	17.9	55	121.9	0.26	2.0	180	161.6	0.79	2	277/1	1–3
V12	PRICE	SDV5	5"	12"x8"	210	100	105	4.9	55	96.9	0.05	0.5	180	159.8	0.15	1	277/1	1–3
V13	PRICE	SDV5	5"	12"x8"	175	65	90	4.5	55	100.1	0.03	0.5	180	161.4	0.15	1	277/1	1–3
V14	PRICE	SDV5	5"	12"x8"	100	65	65	3.8	55	107.1	0.01	0.5	180	164.5	0.15	1	277/1	1–3
V15	PRICE	SDV5	5"	12"x8"	120	65	65	3.8	55	107.1	0.02	0.5	180	164.5	0.15	1	277/1	1–3
V16	PRICE	SDV5	6"	12"x8"	370	70	200	14.0	55	117.5	0.28	1.5	180	160.9	0.40	2	277/1	1–3
V17	PRICE	SDV5	4"	12"x8"	130	60	65	3.8	55	107.1	0.02	0.5	180	164.5	0.15	1	277/1	1–3
V18	PRICE	SDV5	5"	12"x8"	240	65	220	14.7	55	114.8	0.13	1.5	180	159.9	0.40	2	277/1	1–3
V19	PRICE	SDV5	6"	12"x8"	300	70	175	7.9	55	95.2	0.09	2.0	180	171.9	1.35	1	277/1	1–3
V20	PRICE	SDV5	6"	12"x8"	320	70	230	15.0	55	113.6	0.21	1.5	180	159.4	0.40	2	277/1	1–3
V21	PRICE	SDV5	6"	12"x8"	350	70	175	7.9	55	95.2	0.12	2.0	180	171.9	1.35	1	277/1	1–3
V22	PRICE	SDV5	5"	12"x8"	150	65	110	5.0	55	96.0	0.03	0.5	180	159.4	0.15	1	277/1	1–3
V23	PRICE	SDV5	5"	12"x8"	150	65	110	5.0	55	96.0	0.03	0.5	180	159.4	0.15	1	277/1	1–3
V24	PRICE	SDV5	5"	12"x8"	180	60	90	4.9	55	100.1	0.03	0.5	180	161.4	0.15	1	277/1	1–3
V25	PRICE	SDV5	5"	12"x8"	150	65	110	5.0	55	96.0	0.03	0.5	180	159.4	0.15	1	277/1	1–3

REMARKS:
1. FIBER FREE ACOUSTICAL LINER.
2. BOX MANUFACTURER SHALL ACCEPT THE DDC CONTROLS FROM THE CONTROLS MANUFACTURER FOR FACTORY–MOUNTING AND WIRING PRIOR TO SHIPMENT OF THE BOXES.
3. PROVIDE 27724VAC TRANSFORMER.

DATA ROOM COOLING UNITS

MARK	MANUFACTURER	MODEL NUMBER		COOLING CAPACITY		ELECTRICAL CHARACTERISTICS		REFRIGERANT PIPE SIZE		PHYSICAL SIZE AND WT		MANUFACTURER
		INDOOR	OUTDOOR	TOTAL	SENSIBLE	INDOOR	OUTDOOR	LIQUID	GAS	INDOOR	OUTDOOR	
CRAC–1	MITSUBISHI	MSZ–FH15NA	MUZ–15NA	19000 BTUH	13300 BTUH	1.0A., 208VAC, 1PH.	16A., 208VAC, 1PH. MOCP = 20A.	1/4"	1/2"	36 7/16"x9 3/16"x12 11/16" 29#	33 1/16"x13"x34 5/8" 124#	PROVIDE INTERNET GATEWAY
CRAC–2	MITSUBISHI	MSZ–FH15NA	MUZ–15NA	19000 BTUH	13300 BTUH	1.0A., 208VAC, 1PH.	16A., 208VAC, 1PH. MOCP = 20A.	1/4"	1/2"	36 7/16"x9 3/16"x12 11/16" 29#	33 1/16"x13"x34 5/8" 124#	PROVIDE INTERNET GATEWAY
EEAC–1	MITSUBISHI	MSZ–FH09NA	MUZ–09NA	9000 BTUH	6480 BTUH	1.0A., 208VAC, 1PH.	12A., 208VAC, 1PH. MOCP = 15A.	1/4"	3/8"	31 3/8"x10 1/8"x11 5/8" 27#	31 1/2"x11 1/4"x 21 5/8" 80#	PROVIDE INTERNET GATEWAY

COOLING TOWER

MARK	MANUFACTURER	MODEL NUMBER	PERFORMANCE CONDITIONS	ELECTRICAL CHARACTERISTICS	DIMENSIONS	WEIGHTS OPERATING		CONTROL SYSTEMS	REMARKS
						PER CELL	TOTAL		
CT–1,2,3	SPX MARLEY	NC8403 RAN FACTORY ASSEMBLED (3) CELL CROSSFLOW COOLING TOWER	PER CELL 1144 GPM. TOTAL 3432 GPM.	(3) 25 HP (1) SPEED (1) WINDING MOTOR, 460 VAC, 3PH., INVERTER DUTY MOTOR	EACH CELL: 8'x4 3/4"x18'–2"x11'–11 1/4" HIGH PER 3 CELL TOWER: 31'–8"x18'–2"x15'–0 7/8" HIGH	17127	51381	MARLEY M–5–121–010 DPD1 MANUAL RESET VIBRATION CUT–OFF SWITCH	--

BASE TOWER CONSTRUCTION/EQUIPMENT:
GALVANIZED STEEL CASING.
GALVANIZED STEEL STRUCTURE.
STAINLESS STEEL COLLECTION BASIN. SERIES 300.
STAINLESS STEEL DISTRIBUTION BASIN. SERIES 300.
LOW SOUND FAN WITH ALUMINUM BLADES.
GEAREDUCER WITH 5 YEAR WARRANTY.
15 MIL. PVC FILM WITH INTEGRAL LOUVERS AND DRIFT ELIMINATORS.
DRIFT RATE GUARANTEED TO BE NO GREATER THAN .005% OF THE DESIGN FLOW RATE.
CTI CERTIFICATION PER STD–201.
FACTORY MUTUAL APPROVAL, INCLUDING FILL PACK PARTITION.
35 IN. FAN CYLINDER EXTENSION.
HDG STEEL FAN GUARD.

COLLECTION BASIN CONNECTIONS AND ACCESSORIES:
ALL FLANGES ARE TO CLASS 125 ANSI B16.1 STANDARD.
ALL THREADS ARE TO AMERICAN STANDARD PIPE TAPER THREAD.
(2) 8 IN. (203 MM) DIAMETER DEPRESSED SIDE SUMP OUTLET(S) WITH TRASH SCREEN(S) PER TOWER.

DISTRIBUTION BASIN INLET AND ACCESSORIES:
(1) SELF–BALANCING 8 IN. (203 MM) DIAMETER PVC BOTTOM INLET CONNECTION PER CELL.
ALL INTERNAL PIPING IS PVC. EXTERNAL PIPING IS PVC.

MAINTENANCE AND MAINTENANCE ACCESS FEATURES:
TOWER DESIGN IN ACCORDANCE WITH OSHA SAFETY STANDARDS WITH SAFE ACCESS ON THE FAN DECK WHILE THE FAN IS STILL OPERATING.
EXTERNAL LUBE WITH DIPSTICK.
FULL FACE HORIZONTALLY MOUNTED AIR INLET SCREENS.
LARGE ACCESS DOOR LOCATED ON EACH ENDWALL.
(1) ACCESS DOOR PLATFORM.
STAINLESS STEEL PLENUM WALKWAY IN EACH CELL.
FAN DECK EXTENSION.
PERIMETER GUARDRAIL, KNEERAIL AND TOEBOARD.
(1) CASED FACE LADDER.
LADDER(S) EXTEND 60 IN. BELOW BASE OF TOWER.
LADDER SAFETY CAGE(S).
SELF CLOSING SAFETY GATE(S) INCLUDED AT THE TOP OF THE ACCESS LADDER(S).

HTK ARCHITECTS PA
9300 W 110TH ST STE 130 OVERLAND PARK KANSAS 66210 P: 913 663 5373
9105 KANSAS AVE TOPEKA KANSAS 66612 P: 785 266 5373
WWW.HTKARCHITECTS.NET

LS&A Latimer Sommers & Associates, P.A.
CONSULTING ENGINEERS
3639 SW Summerfield Drive, Suite A
Topeka, Kansas 66614-3974
Telephone: (785) 233-3232
FAX: (785) 233-0647
Email: lsapa@lsapa.com
LSA PROJECT NO. 1402032

WILLIAM R. GASSETT LICENSED PROFESSIONAL ENGINEER 10530
4-15-15

DATE:
- 4-15-15

REVISED DATE:
- 12-18-14
- 2-9-15
- 3-10-15
-

HTK PROJECT NUMBER:
- 1410.03

Department of Administration
Office of Facilities and
Procurement Management
800 SW Jackson, Suite 700
Topeka, Kansas 66612-1216
Phone 785-296-8899
FAX 785-296-3456

STATE OF KANSAS
STATE OF KANSAS ENERGY & SERVICE CENTER
Seventh & Van Buren Street, Topeka, Kansas
BUILDING NUMBER 1730000038
DATE: 4-15-15
DRAWN BY: CAD
CHECKED BY: WRB
REV: WRB

MECHANICAL SCHEDULES

A-012651

ME202

CONSTRUCTION DOCUMENTS

JCSBC
2-2-2016
Att.9G.–0069

HIGH PRESSURE STEAM BOILERS

MARK	MANUFACTURER	MODEL NUMBER	DESIGN	SIZE	TOTAL HEATING SURFACE	STEAM STORAGE	DESIGN PRESSURE	OPERATING WEIGHT	STEAM NOZZLE SIZE	BURNER						REMARKS
										MANUFACTURER	MODEL NO.	BURNER RATING	GAS INPUT	#2 FUEL OIL RATE	ELECTRICAL CHARACTERISTICS	
B-1	JOHNSON	PFTX 400-4	4 PASS WATER BACK HIGH PRESSURE STEAM BOILER WITH CORRUGATED FIRE TUBE.	400 HORSEPOWER	2026 SQ FT	74.8 CU FT	150 PSIG	46,000#	8"	LIMPSFIELD	LCNO53P	16.8 MuBTU	16,800 CFH	131.31 GAL/HR	25HP, 460VAC., 3PH.	1, 2
B-2	JOHNSON	PFTX 400-4	4 PASS WATER BACK HIGH PRESSURE STEAM BOILER WITH CORRUGATED FIRE TUBE.	400 HORSEPOWER	2026 SQ FT	74.8 CU FT	150 PSIG	46,000#	8"	LIMPSFIELD	LCNO53P	16.8 MuBTU	16,800 CFH	131.31 GAL/HR	25HP, 460VAC., 3PH.	1, 2
B-3	JOHNSON	PFTX 400-4	4 PASS WATER BACK HIGH PRESSURE STEAM BOILER WITH CORRUGATED FIRE TUBE.	400 HORSEPOWER	2026 SQ FT	74.8 CU FT	150 PSIG	46,000#	8"	LIMPSFIELD	LCNO53P	16.8 MuBTU	16,800 CFH	131.31 GAL/HR	25HP, 460VAC., 3PH.	1, 2

REMARKS:
1. PROVIDE WITH STAND-BY PRE-HEATER CLOSED PIPE WITH ALL REQUIRED VALVES. PIPE FITTING ETC. AND TRAP-DISCHARGED TO SURGE TANK. FULL AND COMPLETE OPERATING SYSTEM.
2. PROVIDE 5" ASME ANGLE STOP CHECK. ASME SPOOL PIECES ARE DETAILED ON DRAWINGS AND ASME OS&Y GATE VALVE.

SURGE TANK

MARK	MANUFACTURER	MODEL NUMBER	DESCRIPTION	TANK	ACCESSORIES	PUMPS - TWO (2) REQUIRED						REMARKS
						GPM	TDH	# STAGES	CONSTRUCTION	ELECTRICAL CHARACTERISTICS	PUMP ACCESSORIES	
ST-1	BFS INDUSTRIES	G202855-5	DUPLEX SURGE TANK WITH 800 GALLON STAINLESS STEEL TANK ON 8' HIGH STRUCTURAL SUPPORT STAND WITH RECIRCULATION PIPING COMPLETE WITH ISOLATION GATE VALVES, CHECK VALVES AND ORIFICES.	800 GAL 304SS 42" DIAMETER 120" LONG	ELECTRIC WATER INLET CONTROL VALVE DP LEVEL TRANSMITTER. FOXBORO IDP10 WATER GLASS LEVEL GAUGE WITH PIPING WATER STORAGE THERMOMETER. HIGH WATER LEVEL ALARM SWITCH MM64. LOW WATER LEVEL ALARM/LOW LEVEL PUMP CUT OFF SWITCH MM64. TEMPERATURE TRANSMITTER FOXBORO.	120	92'	2	STAINLESS STEEL FITTED	5HP, 460VAC., 3PH., 3500 RPM	GATE ISOLATION VALVES. EXPANSION COUPLINGS. Y TYPE STRAINERS. DISCHARGE PRESSURE GAUGES. PRESSURE TRANSMITTER FOXBORO.	CONTROL PANEL - UL APPROVED AND LABELED IN NEMA 1 ENCLOSURE. (2) VFD'S, ONE FOR EACH PUMP WITH 3 PHASE PROTECTION, ON/OFF SWITCH FUSE BLOCK WITH FUSES. RUNNING LIGHTS. DISCONNECT WITH EXTERNAL OPERATOR CONTROL CIRCUIT TRANSFORMER . LOW WATER PUMP CUT-OFF. HIGH LOW LEVEL ALARM SYSTEM. HIGH LEVEL LIGHT. LOW LEVEL LIGHT. HORN. SILENCING SWITCH. PLC SHALL BE A B COMPACT LOGIX WITH PANELVIEW.

DEAERATOR

MARK	MANUFACTURER	MODEL NUMBER	DESCRIPTION	STORAGE TANK	ACCESSORIES	PUMPS - TWO (2) REQUIRED						REMARKS
						GPM	TDH	# STAGES	CONSTRUCTION	ELECTRICAL CHARACTERISTICS	PUMP ACCESSORIES	
DA-1	BFS INDUSTRIES	#40MS-130 DUPLEX ZER-O-PAC	40,000 #/UR SPRAY TYPE DA UNIT WITH CAPACITY OF 1,024 GALLONS. (2) PUMPS ON 8' STRUCTURAL SUPPORT STAND. PUMP DISCHARGE PRESSURE OF 130 PSIG WITH RECIRCULATION PIPING COMPLETE WITH ISOLATION GATE VALVES, CHECK VALVES AND ORIFICES.	ASME STAMPED 50 PSIG 60"DIA.x128"LONG	(1) ELECTRIC WATER INLET CONTROL VALVE. (1) DP LEVEL TRANSMITTER; FOXBORO IDP10. (1) OVERFLOW TRAP SIZED TO PASS THE RATED CAPACITY OF FLASHING WATER AT DEAERATOR OPERATING PRESSURE. (1) ELECTRIC STEAM INLET PRESSURE REDUCING VALVE. (1) PRESSURE TRANSMITTER; FOXBORO IGP10. (1) RELIEF VALVES-CAPACITY GREATER THAN MAX. CAPACITY OF PRV AND SET AT 50 PSIG. (1) SET SAFETY TYPE WATER GLASS GAUGE. (1) WATER INLET PRESSURE GAUGE WITH PIGTAIL. (1) STEAM PRESSURE GAUGE WITH PIGTAIL. (1) STORAGE SECTION THERMOMETER. (1) MANUAL VENT VALVE. (1) VACUUM BREAKER. (1) HIGH LEVEL ALARM SWITCH; MM 64. (1) LOW LEVEL ALARM/LOW LEVEL PUMP CUT-OFF SWITCH; MM 64. (1) 304 SS CHEMICAL INJECTION QUILL. (1) TEMPERATURE TRANSMITTER, FOXBORO.	120	315'	6	STAINLESS STEEL FITTED	15HP, 460VAC., 3PH., 3500 RPM.	GATE VALVES. EXPANSION COUPLINGS. Y TYPE STRAINERS. DISCHARGE PRESSURE GAUGES. PRESSURE TRANSMITTER FOXBORO.	CONTROL PANEL - UL APPROVED AND LABELED IN NEMA 1 ENCLOSURE. (2) VFD CONTACTORS MAGNETIC ACROSSOTHE-LINE STARTERS, EACH HAVING: 3-PHASE PROTECTION ON/OFF SWITCH FUSE BLOCK WITH FUSES RUNNING LIGHT DISCONNECT SWITCH WITH EXTERNAL OPERATOR (1) CONTROL CIRCUIT TRANSFORMER. (1) LOW WATER PUMP CUT OFF. (1) HIGH/LOW LEVEL ALARM SYSTEM COMPLETE WITH HIGH LEVEL LIGHT, LOW LEVEL LIGHT, HORN, AND SILENCING SWITCH. (1) PLC; AB COMPACT LOGIX WITH PANELVIEW.

FUEL OIL PUMPING SYSTEM

MARK	MANUFACTURER	MODEL NUMBER	SERVICE	FLOW RATE	DISCHARGE PRESSURE	ELECTRICAL CHARACTERISTICS	ACCESSORIES	CONTROL PANEL	ALARMS	LOGIC CONTROL PANEL
FOP-1	CRITICAL FUEL SYSTEMS	LZ0780 DUPLEX ON INTEGRAL FORMED STEEL UNIT BASE WITH DRIP PAN	FUEL OIL	780 GPH/13 GPM.	50 PSIG	1HP, EACH PUMP 460VAC., 3PH.	(2) SIMPLEX INLET BASKET STRAINERS. (2) INLET FULL PORT BALL VALVES. (2) 2 1/2" SS CASE LIQUID FILLED COMPOUND GAUGE WITH SHUT OFF COCK. (2) EXTERNAL RELIEF VALVES. (2) OUTLET FULL PORT BALL VALVES. (2) CHECK VALVES. (1) 2 1/2" SS CASE LIQUID FILLED PRESSURE GAUGE WITH SHUT OFF COCK.	INTEGRAL MOUNTED ON SYSTEM BASE NEMA 4 ENCLOSURE. (2) FVNR MOTOR STARTERS. (2) RUNNING LIGHTS. (2) HOA SWITCHES. (2) FUSED DISCONNECT SWITCHES WITH EXTERNAL OPERATORS. (2) FUSE BLOCKS. (2) CONTROL CIRCUIT TRANSFORMER. (2) PUMP RUN TIME MONITORS.	SINGLE POINT ALARM SYSTEM WITH LIGHT AND HORN.	NEMA 4 ENCLOSURE. PLC WITH 6" TOUCHSCREEN. MOD BUS COMMUNICATION MODULE.

BLOW DOWN COOLER

MARK	MANUFACTURER	MODEL NUMBER	DESCRIPTION	TANK	AFTERCOOLER	REMARKS
BDC-1	LATTNER	1800 WITH #625A AUTOMATIC AFTER COOLER	HEAVY DUTY ASME CODE STEAM BOILER BLOW DOWN SEPARATOR WITH AFTER COOLER AND CONTROL PANEL	UL STAMPED ASME CODE 150 PSIG AT 550°F WITH MOUNTING LEGS	AUTOMATIC AFTERCOOLER THAT TAKES DOMESTIC COLD WATER TO COOL BLOW DOWN EFFLUENT TO MAX OF 140°F	--

WATER SOFTENER

MARK	MANUFACTURER	MODEL NUMBER	CAPACITY	FLOW RATE	PEAK FLOW	TANK QUANTITY AND SIZE	BRINE TANK	CONTROLLERS	REMARKS
WS-1	WOOD BROS. IND	WB29T450-30	450,000 GRAINS	84 GPM	105 GPM	(2) 30" DIAMETER 72" TALL COMPOSITE	39"DIA.x48"POLY TANK	PROVIDE FLECK CONTROL VALVE	--

STEAM EXHAUST SILENCER

MARK	MANUFACTURER	MODEL NUMBER	DESCRIPTION	REMARKS
ES-1	PENN	SP5-24-S	24" DIAMETER STEAM EXHAUST SILENCER WITH OVERALL LENGTH OF 6'-8". COMPLETE WITH INLET DIFFUSER, 150# ANSI FLANGE ON INLET WITH COMBINED ATTENUATION OF 26db.	--

CONDENSING UNIT SCHEDULE

MARK	MANUFACTURER	MODEL NUMBER	TOTAL CAPACITY	ELECTRICAL CHARACTERISTICS				REMARKS
				MCA	MOCP	VOLTAGE	PHASE	
CU-AHU-2	TRANE	4TTA3024	21 MBH	18A.	30A.	208/230	1	REFRIGERANT PIPE SIZING BY UNIT MANUFACTURER

AIR HANDLING UNIT SCHEDULE

MARK	MANUFACTURER	MODEL NUMBER	TOTAL CFM	MIN. O/A CFM	TOTAL STATIC PRESSURE	EXTERNAL STATIC PRESSURE	ELECTRICAL CHARACTERISTICS	COOLING COIL									COOLING COIL									FILTERS	REMARKS
								TOTAL COOLING	SENSIBLE COOLING	EAT Db/Wb	LAT Db/Wb	GPM	AP AIR	EWT	LWT	AP WATER	TOTAL HEATING CAP	HEATING CFM	EAT	LAT	GPM	AP AIR	EWT	LWT	AP WATER		
AHU-1	TRANE	SIZE 12 PERFORMANCE CLIMATE CHANGER	6500	1950	4.0"	2.0"	7.5HP, 460 VAC, 3PH.	307.25 MBH	201.44 MBH	82.5/69	55.43/54	51	.75	42°F	54°F	6.9	282 MBH	6500	45°F	85°F	28.5	.13"	180	160	2.5	2" THICK MERV 8	PROVIDE INVERTER DUTY MOTOR
AHU-2	TRANE	BCVD SIZE 24	800	100	1.785"	.75"	1/2HP, 120 VAC, 1PH.	29.17 MBH	21.85 MBH	77.8/65	52.89/52.72	NA		NA	NA	NA	32.18 MBH	800	60°F	97.1°F	2.0	-	180	148	3.15	2" THICK MERV 8	VERTICAL CONFIGURATION COUNTER SWIRL FAN

HTK ARCHITECTS PA
9200 W 110TH ST STE 130
OVERLAND PARK KANSAS 66210
P: 913 663 5373
9105 KANSAS AVE
TOPEKA KANSAS 66612
P: 785 266 5973
WWW.HTKARCHITECTS.NET

LS&A Latimer Sommers & Associates, P.A.
CONSULTING ENGINEERS
3639 SW Summerfield Drive, Suite A
Topeka, Kansas 66614-3974
Telephone: (785) 233-3232
FAX: (785) 233-0647
Email: lsapa@lsapa.com
LSA PROJECT NO. 1402032

WILLIAM R. BASSETT LICENSED PROFESSIONAL ENGINEER 10530
4-15-15

DATE:
- 4-15-15

REVISED DATE:
- 12-18-14
- 2-9-15
- 3-10-15

HTK PROJECT NUMBER:
- 1410.03

Department of Administration
Office of Facilities and
Procurement Management
800 SW Jackson, Suite 700
Topeka, Kansas 66612-1216
Phone 785-296-8899
FAX 785-296-3456

STATE OF KANSAS
STATE OF KANSAS ENERGY & SERVICE CENTER
Seventh & Van Buren Street, Topeka, Kansas
BUILDING NUMBER 1730000038
DATE: 4-15-15 DRAWN BY: CAD CHECKED BY: WRB REV: WRB

MECHANICAL SCHEDULES

A-012651

ME203

CONSTRUCTION DOCUMENTS

JCSBC
2-2-2016
Att.9G.--0070

JCSHC
2-2-2016
AIL#G-0071

WELDING AND PAINT SPRAY BOOTH EXHAUST

MARK	MANUFACTURER	MODEL NUMBER	EST/CFM	DESCRIPTION	ELECTRICAL CHARACTERISTICS	REMARKS
PSB-1	AEROVENT	24B3618	.75"/7000	24"ø BELT DRIVE TUBE AXIAL FAN	2HP, 460 VAC., 3PH.	PROVIDE INVERTER DUTY MOTOR
WE-1	AEROVENT	BSB4014B1052S	-	14"ø BELT DRIVE TUBE AXIAL FAN WITH BUTTERFLY DAMPER AND WIND BAND	3/4HP, 480 VAC., 3PH.	PROVIDE ELECTRONIC SPEED CONTROL

EXHAUST FAN SCHEDULE

MARK	MANUFACTURER	MODEL NUMBER	CFM	SP	HP	ELECTRICAL CHARACTERISTICS	REMARKS
EF-1	GREENHECK	GB121-5	1210	.75	1/2	277V, 1 PH	2, 3, 4
EF-2	GREENHECK	G-097-B	100	.375	1/4	277V, 1 PH	1, 2, 3, 4
EF-3	GREENHECK	G-085-D	300	.375	1/20	277V, 1 PH	1, 2, 3, 4
EF-4	GREENHECK	G-097-B	130	.375	1/4	277V, 1 PH	1, 2, 3, 4
EF-5	GREENHECK	G-097-B	125	.5	1/4	277V, 1 PH	1, 2, 3, 4

REMARKS:
1. SPEED DRIVE.
2. CUWB.
3. MOTORIZED BACKDRAFT DAMPER.
4. UNIT DISCONNECT.

SUMP PUMP SCHEDULE

MARK	MANUFACTURER	MODEL NUMBER	FLOW CHARACTERISTICS	ELECTRICAL CHARACTERISTICS	ACCESSORIES
ELEVATOR SUMP	WELL PUMP COMPANY	1411	50 GPM @ 10' TDH 2" DISCHARGE	1/2 HP, 120VAC, 1750 RPM.	#8341 K 101S NEMA 4X HIGH WATER ALARM WITH #8230 HIGH LEVEL FLOAT SWITCH. #8246 TETHERED FLOAT SWITCHES. SEE WATER INC #05520 PB PB6 OIL SAVER WATER PUMP SWITCH
FOUNDATION DRAINAGE SUMP	WELL PUMP COMPANY	-	75 GPM @ 30' TDH 2" DISCHARGE	1 1/2 HP, 460VAC, 3PH.	#2613-2 DUPLEX PUMP REMOVAL SYSTEM 1" GUIDE POLES BY OTHERS. #8230 DUPLEX ALARM FLOAT SYSTEM #8158 DUPLEX CONTROL PANEL #8251 NEMA 6P JUNCTION BOX

HEAT EXCHANGER SCHEDULE

MARK	LOCATION	MANUFACTURER	MODEL NUMBER	FLOW RATE	PRESSURE DROP	ENT/LWT	CAPACITY	STEAM LOAD	SIZE	REMARKS
HEAT X-1	MECHANICAL ROOM #123	BELL & GOSSETT	SU-8-3-2	80 GPM	0.4 FEET	160°F/180°F	781,766 BTU/HR	809/HR	85 1/8" DIAMETER 41 3/8" LONG	PROVIDE SUPPORT STAND
HEAT X-2	MECHANICAL VAULT KSH-NW	BELL & GOSSETT	QSU 14 6-2	450 GPM	1.8 FEET	150°F/180°F	6,604,355	6837/HR	14" DIAMETER 80 3/4" LONG	PROVIDE SUPPORT STAND

EXPANSION TANK SCHEDULE

MARK	LOCATION	MANUFACTURER	MODEL NUMBER	TOTAL TANK VOLUME	ACCEPTANCE VOLUME	REMARKS
EXTHW-1	MECHANICAL ROOM #123	AMTROL	AX60V	33.6 GAL	11.5 GAL	ASME CERTIFICATION REQUIRED
EXTHW-2	KSH-NW MECHANICAL VAULT	BELL & GOSSETT	SERIES B MODEL B-2000 #116933	528 GAL	528 GAL	ASME CERTIFICATION REQUIRED. PROVIDE SEISMIC RESTRAINTS

PUMP SCHEDULE

MARK	LOCATION	MANUFACTURER	MODEL NUMBER	TYPE	FLOW	TOTAL DEVELOPED HEAD	ELECTRICAL CHARACTERISTICS	INVERTOR DUTY MOTOR	REMARKS
HWP-1	MECHANICAL ROOM #123	BELL & GOSSETT	SERIES E-1510	BASE MOUNTED END SUCTION	80 GPM	55'	3HP, 460VAC., 3PH., 1800 RPM	YES	PROVIDE "AEFIS" MOTOR SHAFT BEARING GROUNDING ASSEMBLY.
HWP-2	MECHANICAL ROOM #123	BELL & GOSSETT	SERIES E-1510	BASE MOUNTED END SUCTION	80 GPM	55'	3HP, 460VAC., 3PH., 1800 RPM	YES	PROVIDE "AEFIS" MOTOR SHAFT BEARING GROUNDING ASSEMBLY.
HWP-3	MECHANICAL VAULT KSH-NW	BELL & GOSSETT	SERIES E-1510 3GB	BASE MOUNTED END SUCTION	450 GPM	150'	30HP, 460VAC., 3PH., 1800 RPM	YES	PROVIDE "AEFIS" MOTOR SHAFT BEARING GROUNDING ASSEMBLY.
HWP-4	MECHANICAL VAULT KSH-NW	BELL & GOSSETT	SERIES E-1510 3GB	BASE MOUNTED END SUCTION	450 GPM	150'	30HP, 460VAC., 3PH., 1800 RPM	YES	PROVIDE "AEFIS" MOTOR SHAFT BEARING GROUNDING ASSEMBLY.
CWP-1	MECHANICAL VAULT KSH-NW	BELL & GOSSETT	SERIES E-1510 4GC	BASE MOUNTED END SUCTION	555 GPM	150'	40HP, 460VAC., 3PH., 1800 RPM	YES	PROVIDE "AEFIS" MOTOR SHAFT BEARING GROUNDING ASSEMBLY.
.375 CWP-2	MECHANICAL VAULT KSH-NW	BELL & GOSSETT	SERIES E-1510 4GC	BASE MOUNTED END SUCTION	555 GPM	150'	40HP, 460VAC., 3PH., 1800 RPM	YES	PROVIDE "AEFIS" MOTOR SHAFT BEARING GROUNDING ASSEMBLY.
.375 CONDENSER CP1	CHILLER ROOM #127	BELL & GOSSETT	MODEL VIT-C4TM SIZE 12 CHC	VERTICAL TURBIN 1 STAGE	1200 GPM	65'	30HP, 460VAC., 3PH., 1800 RPM	YES	PROVIDE "AEFIS" MOTOR SHAFT BEARING GROUNDING ASSEMBLY. REFER TO PLANS FOR BASIN DEPTH
CONDENSER CP2	CHILLER ROOM #127	BELL & GOSSETT	MODEL VIT-C4TM SIZE 12 CHC	VERTICAL TURBIN 1 STAGE	1200 GPM	65'	30HP, 460VAC., 3PH., 1800 RPM	YES	PROVIDE "AEFIS" MOTOR SHAFT BEARING GROUNDING ASSEMBLY. REFER TO PLANS FOR BASIN DEPTH
CONDENSER CP3	CHILLER ROOM #127	BELL & GOSSETT	MODEL VIT-C4TM SIZE 12 CHC	VERTICAL TURBIN 1 STAGE	1200 GPM	65'	30HP, 460VAC., 3PH., 1800 RPM	YES	PROVIDE "AEFIS" MOTOR SHAFT BEARING GROUNDING ASSEMBLY. REFER TO PLANS FOR BASIN DEPTH
BASIN FILTRATION FP4	CHILLER ROOM #127	BELL & GOSSETT	MODEL VIT-C4TM SIZE 9 WAHC	VERTICAL TURBIN 1 STAGE	270 GPM	65'	7 1/2HP, 460VAC., 3PH., 1800 RPM	YES	PROVIDE "AEFIS" MOTOR SHAFT BEARING GROUNDING ASSEMBLY. REFER TO PLANS FOR BASIN DEPTH

STEAM CONDENSATE RECEIVER SCHEDULE

MARK	LOCATION	MANUFACTURER	MODEL NUMBER	RECEIVER TANK SIZE	RECEIVER TANK MATERIAL	GPM	DISCHARGE PRESSURE	CHARACTERISTICS	REMARKS
CRP-1	MECHANICAL ROOM #123	MESSPLAY MACHINERY CO.	CUSTOM	30"X30"X20" TALL WITH (1) 3" FLANGED RETURN	STAINLESS STEEL TYPE 304	12	57' THD	(2) GROUND FOS 1.25" MODEL SPK MOTOR 460 VAC. 3PH., WITH UNIT MOUNTED DISCONNECT SWITCH AND MOTOR STARTERS	1, 2, 3, 4, 5, 6

REMARKS:
1. PROVIDE DUPLEX PUMPS WITH SOUARE D NEMA 1 #9038 MECHANICAL ALTERNATOR FLOAT AND ALARM CONTACTS. SWITCH WITH HIGH WATER ALARM CONTACTS.
2. PROVIDE WITH SINGLE POINT CONNECTION.
3. PROVIDE REMOTE NEMA 12 DUPLEX CONTROL PANEL WITH ICE STARTERS. FUSED DISCONNECT, 120V. CPT. HOA SWITCHES. RUN LIGHTS, ALARM LIGHT, ALARM HORN AND SILENCE BUTTON.
4. HIGH WATER ALARM. PROVIDE BINARY INPUT TO LOCAL JC PANEL.
5. PROVIDE BASKET STRAINER WITH STAINLESS STEEL BASKET.
6. PROVIDE STAINLESS STEEL DIAL THERMOMETER. BRONZE GAUGE VALVE SET WITH STAINLESS STEEL ISOLATION BALL VALVES. 1.5" BRONZE RATE SETTING VALVE.

HTK PROJECT NUMBER:
● 1410.03

Department of Administration
Office of Facilities and
Procurement Management
800 SW Jackson, Suite 700
Topeka, Kansas 66612-1216
Phone 785-296-8899
FAX 785-296-3486

STATE OF KANSAS
STATE OF KANSAS ENERGY & SERVICE CENTER
Seventh & Van Buren Street, Topeka, Kansas
BUILDING NUMBER 1730000038
DRAWN BY: CAD CHECKED BY: WRB REV: WRB
DATE: 4.15.15

MECHANICAL
SCHEDULES

A-01265.1

ME204

CONSTRUCTION
DOCUMENTS

DATE:
● 4-15-15

REVISED DATE:
● 12-18-14
● 2-9-15
● 3-10-15

LSA PROJECT NO. 1402002

LSA
Lefebvre Sonnenda & Associates, P.A.
CONSULTING ENGINEERS
3839 SW Shrewsbury Drive, Suite A
Topeka, Kansas 66614-5374
Telephone (785) 233-0202
FAX (785) 233-0567
Email: lsa@lsaks.com

4-15-15
10530
LICENSED
PROFESSIONAL
ENGINEER
WILLIAM R. BOWLES
WWW.LSAKS.COM

HTK
ARCHITECTS PA
900 S. KANSAS AVE.
TOPEKA, KANSAS 66612
P: 785.266.5373
OVERLAND PARK, KANSAS 66210
9100 W. 110TH ST., STE. 150
P: 913.663.5373
WWW.HTKARCHITECTS.NET

... ME301_Automatic System Control Diagram.dwg 96 04/14/15 GTC 96 04/14/15 GTC 96 04/13/15 GTC 96 04/12/15 GTC 04/12/15 GTC List.dwg 96 04/12/15 GTC List.dwg 96 02/24/15 GTC List.dwg 96 02/24/15 GTC GTC GTC

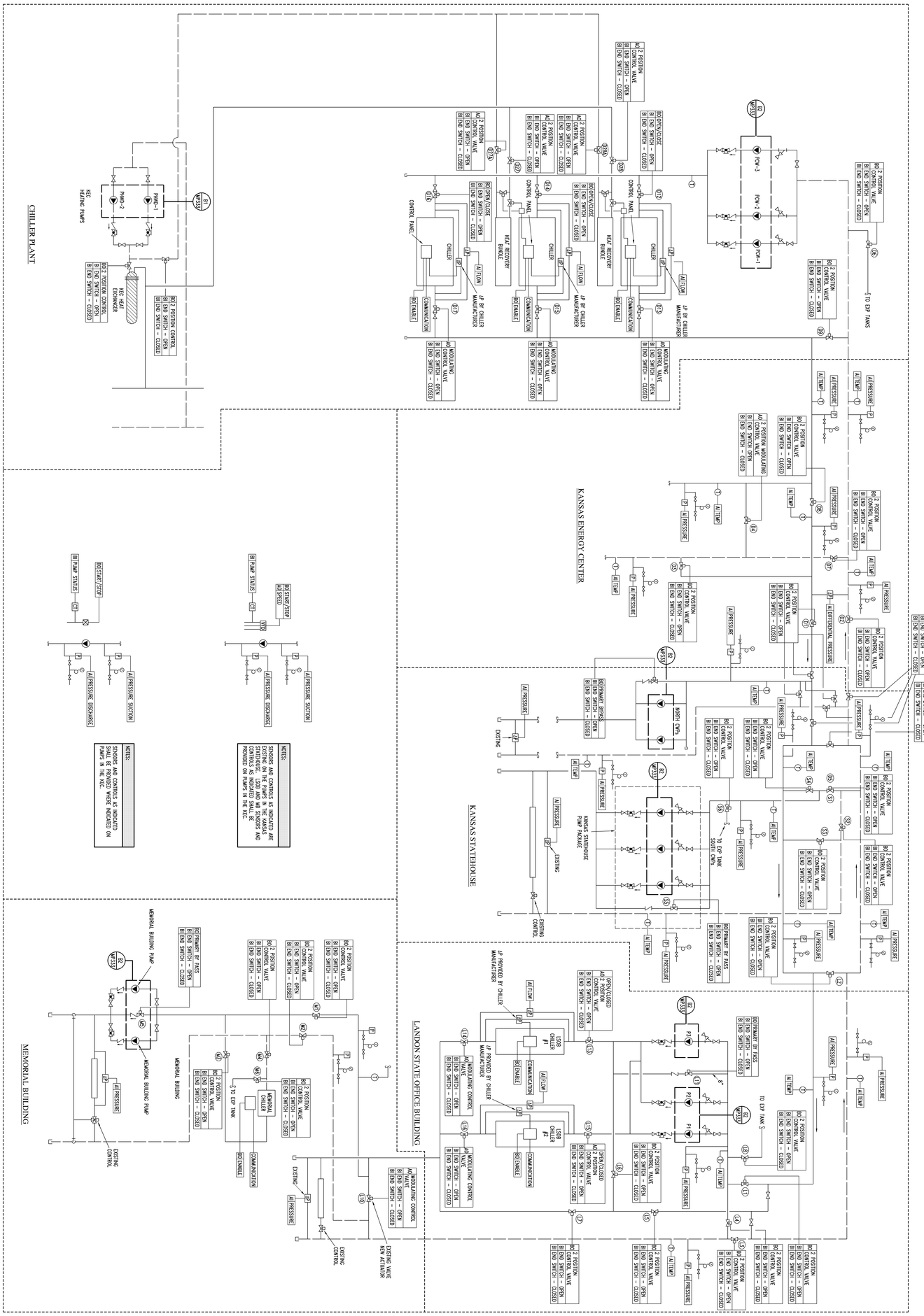

STATE OF KANSAS
STATE OF KANSAS ENERGY & SERVICE CENTER
Seventh & Van Buren Street, Topeka, Kansas
BUILDING NUMBER 17300-00038

DATE: 4-15-15 DRAWN BY: CAD CHECKED BY: WRB REV: WRB

Department of Administration
Office of Facilities and
Procurement Management
800 SW Jackson, Suite 700
Topeka, Kansas 66612-1216
Phone 785-296-8899
FAX 785-296-3456

DATE: 4-15-15
REVISED DATE:
12-18-14
2-9-15
3-10-15
HTK PROJECT NUMBER: 1410.03

WILLIAM R. WRIGHT
LICENSED
10530
PROFESSIONAL ENGINEER
4-15-15

LS&A
Lawrence Sommers & Associates, P.A.
CONSULTING ENGINEERS
3609 SW Summerfield Drive, Suite A
Topeka, Kansas 66614-3714
Telephone: (785) 233-3232
FAX: (785) 233-5647
Email: lsapa@lsapa.com
LSA PROJECT NO. 140200

HTK ARCHITECTS PA
900 S. KANSAS AVE.
TOPEKA KANSAS 66612
P. 785-266-5373
9300 W. 110TH ST. STE. 150
OVERLAND PARK KANSAS 66210
P. 913-663-5373
WWW.HTKARCHITECTS.NET

AUTOMATIC SYSTEM CONTROL DIAGRAM
A-012651
ME301
CONSTRUCTION DOCUMENTS

JCSBC
2-2-2016
AUG-06-2072

SEQUENCE OF OPERATION:

THE SYSTEM CONSISTS OF WATER COOLED CHILLERS, AN AIR COOLED CHILLER, CHILLED WATER PUMPS, CONDENSER WATER PUMPS, CONDENSER TOWER FANS, TWO POSITION CONTROL VALVES AND MODULATING CONTROL VALVES. A COMPLETE AND OPERATIONAL CHILLED WATER COOLING SYSTEM WILL BE PROVIDED IN EACH THE KANSAS ENERGY CENTER, THE LANDON STATE OFFICE BUILDING AND THE MEMORIAL BUILDING. EACH SYSTEM SHALL BE OPERATIONAL, DEPENDING ON THE POSITIONING OF CONTROL VALVES WITHIN THE SYSTEM, TO PROVIDE COOLING TO THE FOLLOWING BUILDINGS WITHIN THE CORE STATE OF KANSAS CAPITOL COMPLEX:

THE KANSAS ENERGY CENTER (KEC)
THE LANDON STATE OFFICE BUILDING (LSOB)
THE KANSAS STATE HOUSE (KSH)
THE MEMORIAL BUILDING (MB)

DEPENDING ON AMBIENT CONDITION AND INDIVIDUAL BUILDING INTERNAL LOAD CONDITIONS, THE CHILLED WATER SYSTEMS IN THE KEC AND THE LSOB CAN PROVIDE COOLING TO THE INDIVIDUAL BUILDING WITHIN WHICH IT RESIDES OR A COMBINATION OF BUILDINGS WITHIN THE CORE STATE OF KANSAS CAPITOL COMPLEX. THE AIR COOLED CHILLER, LOCATED IN THE MB, PROVIDES COOLING ONLY FOR THE MB.

THE SYSTEM LOCATED IN THE KANSAS ENERGY CENTER (KEC) CAN PROVIDE COOLING TO THE KEC; THE KEC AND KSH; THE KEC, KSH AND LSOB OR THE KEC, KSH, LSOB AND MB.

THE SYSTEM IN THE LANDON STATE OFFICE BUILDING CAN PROVIDE COOLING TO THE LSOB; THE LSOB AND MB; THE LSOB, MB AND KSH OR THE LSOB, MB, KSH AND KEC.

THE DECISION TO ENERGIZE A PARTICULAR CHILLED WATER SYSTEM OR A COMBINATION OF CHILLED WATER SYSTEMS AND WHICH BUILDINGS EACH SYSTEM SERVES SHALL BE MADE BY THE OPERATOR THROUGH THE BUILDING AUTOMATION SYSTEM (BAS).

1. THE OPERATOR SELECTS A CHILLER OR CHILLERS TO RUN FROM THE BAS. THE CHILLED WATER ISOLATION VALVE ON BOTH THE ENTERING AND LEAVING SIDE OF THE SELECTED CHILLER OR CHILLERS SHALL MODULATE OPEN.

   a. ONCE THE ISOLATION VALVES ON THE SELECTED CHILLER ARE EACH FULLY OPEN, AS INDICATED BY AN END SWITCH IN EACH RESPECTIVE CONTROL VALVE, THE PRIMARY CHILLED WATER PUMPING SYSTEM SHALL BE RELEASED TO START.

      i. NOTE THAT THERE ARE THREE PRIMARY PUMPS IN EACH THE KEC AND THE LSOB SYSTEM, EACH CONTROLLED BY A VARIABLE SPEED MOTOR CONTROLLER.

      ii. ANY TWO PUMPS IN EACH RESPECTIVE BUILDING WILL BE UTILIZED TO MAINTAIN A DIFFERENTIAL PRESSURE ACROSS THE SUPPLY AND RETURN MAINS IN THAT BUILDING AS INDICATED ON THE DRAWINGS. THE REQUIRED DIFFERENTIAL PRESSURES SHALL BE DETERMINED BY TAB. IN EACH BUILDING, ONE PUMP IS PROVIDED FOR STAND BY OPERATION.

      iii. THE BAS WILL AUTOMATICALLY ALTERNATE THE STAGING OF THE PUMPS IN ORDER TO EQUALIZE RUNTIME. THE MANUAL SELECTION OF THE OPERATING PUMP OR PUMPS SHALL ALSO BE POSSIBLE.

      iv. SHOULD A CHILLED WATER PUMP FAIL TO START UPON RECEIVING A START SIGNAL, THE BAS WILL THEN ACTIVATE A LOCKOUT ALARM FOR THAT PUMP AND SHALL TAKE THAT PUMP OUT OF THE START SEQUENCE. THE BAS WILL THEN START THE STAND-BY PUMP. THE OPERATOR MUST MANUALLY RESET THE LOCKOUT ALARM PRIOR TO THAT PUMP BEING PLACED BACK INTO SERVICE.

      v. THE MODULATING CONTROL VALVE PROVIDED IN A "MINIMUM CHILLER FLOW" BY-PASS PIPE SHALL MODULATE TO THE FULL OPEN POSITION AND THE (2) POSITION VALVE PROVIDED IN THE PIPING THAT BY-PASSES THE PUMPS IN EACH BUILDING SHALL BE OPEN.

         1. NOTE THAT IF THE LSOB CHILLERS ARE OPERATIONAL TO PROVIDE COOLING TO ANY COMBINATION OF THE BUILDINGS IN THE SYSTEM, THE (2) POSITION VALVE IN THE BY-PASS AROUND THE LSOB CHILLER PUMPS SHALL REMAIN CLOSED.

      vi. DIFFERENTIAL PRESSURE SENSORS ARE EITHER EXISTING OR SHALL BE PROVIDED AS REQUIRED IN EACH EXISTING BUILDING FOR THE CONTROL OF THE PUMPING SYSTEM WITHIN THAT BUILDING.

         1. ONCE THE CHILLED WATER SYSTEM IN EACH RESPECTIVE BUILDING IS OPERATING, AS PROVEN BY THE DIFFERENTIAL PRESSURE SENSORS OUT IN THE SYSTEM OF EACH BUILDING, THE MODULATING CONTROL VALVE PROVIDED IN THE "MINIMUM CHILLER FLOW" BY PASS SHALL BE RELEASED TO MODULATE AS REQUIRED TO MAINTAIN MINIMUM CHILLER FLOW.

         2. NOTE THAT THESE VALVES SHALL BE OPEN ONLY WHEN TOTAL FLOW IN THE SYSTEM IS AT OR BELOW THE MINIMUM CHILLER FLOW REQUIREMENT.

   b. AFTER THE OPERATOR SELECTS A CHILLER TO OPERATE; THE BAS WILL AUTOMATICALLY START THE COOLING TOWER SEQUENCE OF OPERATION AS REQUIRED TO PROVIDE THE REQUIRED CONDENSER WATER TEMPERATURE.

      i. KEC CHILLER PLANT

         1. THE CONDENSER WATER ISOLATION/BYPASS VALVE AT THE SELECTED CHILLER SHALL OPEN TO FULL BYPASS OF THE CONDENSER SHELL. NOTE THAT THIS CONTROL VALVE IS CONTROLLED BY THE RESPECTIVE CHILLER'S CONTROL SYSTEM, NOT BY THE BAS.

         2. THE BYPASS VALVE IN THE COOLING TOWER SHALL BE OPENED.

         3. AFTER THE END SWITCH CONFIRMS THAT THE CONDENSER WATER ISOLATION VALVES HAVE FULLY OPENED TO THE POSITION INDICATED ABOVE, A CONDENSER WATER PUMP SHALL BE STARTED. THE SELECTION OF WHICH CONDENSER WATER PUMP TO RUN WILL BE BY THE BAS BASED ON RUN TIME.

         4. SHOULD A CONDENSER WATER PUMP FAIL TO START UPON RECEIVING A START SIGNAL, THE BAS WILL THEN ACTIVATE A LOCKOUT ALARM FOR THAT PUMP AND SHALL TAKE THAT PUMP OUT OF THE START SEQUENCE. THE BAS WILL THEN START A SECOND PUMP. THE OPERATOR MUST MANUALLY RESET THE LOCKOUT ALARM PRIOR TO THAT PUMP BEING PLACED BACK INTO SERVICE.

         5. THE CONDENSER WATER FLOW CONTROL VALVE AT THE CHILLER CONDENSER SHALL REMAIN IN THE CONDENSER BYPASS POSITION UNTIL THE CHILLER'S REFRIGERANT PRESSURE ELEVATES INTO THE CONTROL RANGE. ONCE REFRIGERANT PRESSURE SO ELEVATES, THE CONTROL VALVE WILL BE RELEASED TO ALLOW CONTROL OF FLOW THROUGH THE CONDENSER SHELL. THIS FLOW SHALL BE MODULATED TO MAINTAIN REQUIRED REFRIGERANT PRESSURE DIFFERENTIAL BETWEEN THE EVAPORATOR AND CONDENSER SHELLS. NOTE THAT THIS CONTROL IS BY THE RESPECTIVE CHILLER'S CONTROL SYSTEM.

         6 CONDENSER WATER SHALL FLOW THROUGH THE COOLING TOWER BYPASS VALVE UNTIL THE TEMPERATURE OF THE CONDENSER WATER ELEVATES TO A PREDETERMINED TEMPERATURE AT WHICH TIME, THE CONDENSER WATER TOWER BYPASS VALVE SHALL BE MODULATED TO THE CLOSED POSITION AND THE ISOLATION VALVE FOR THE SELECTED TOWER CELL SHALL BE OPENED.

         7. CONDENSER WATER SHALL, INITIALLY, FLOW OVER THE TOWER AS THE FIRST STAGE OF CAPACITY CONTROL. AS THE CONDENSER WATER SUPPLY TEMPERATURE RISES, THE COOLING TOWER FANS SHALL BE CONTROLLED, VIA THE VARIABLE MOTOR SPEED DRIVE, BY THE BAS, IN ORDER TO MAINTAIN AN ADJUSTABLE CONDENSER WATER SUPPLY TEMPERATURE BETWEEN 75 DEG. (ADJUSTABLE) AND 85 DEG. (ADJUSTABLE). THE BAS WILL UTILIZE AN ALGORITHM IN ORDER TO DETERMINE THE MOST EFFICIENT SPEED OF THE RESPECTIVE TOWER FAN THAT WILL MAINTAIN THE CONDENSER WATER SUPPLY TEMPERATURE SET POINT. THIS ALGORITHM WILL TAKE INTO ACCOUNT THE APPROACH TEMPERATURE OF THE TOWERS, THE AMBIENT WET BULB TEMPERATURE, THE TEMPERATURE OF THE WATER IN THE SUMP AND THE ANTICIPATED LAG OF THE SYSTEM DUE TO THE VOLUME OF WATER IN THE SUMP. THE BAS SHALL THEN MAINTAIN THE CONDENSER WATER SUPPLY TEMPERATURE SET POINT BY VARYING THE SPEED OF THE FANS. THE MINIMUM SPEED OF THE FAN SHALL BE 25% OF FULL SPEED. IF THE FAN REMAINS AT MINIMUM SPEED FOR MORE THAN 3 MINUTES, THE FAN SHALL BE SHUT OFF WHILE WATER IS ALLOWED TO CONTINUE FLOWING OVER THE TOWER. THE FAN WILL BE RESTARTED BY THE BAS CALLING FOR A FAN SPEED OF GREATER THAN 25%.

         8. WHEN THE COOLING TOWER BYPASS VALVE IS OPENED TO ALLOW CONDENSER WATER FLOW TO BYPASS THE COOLING TOWER, THE COOLING TOWER FAN SHALL STOP (IF RUNNING). THE COOLING TOWER FAN OR FANS SHALL NOT OPERATE WHEN THE TOWER IS OPERATING IN THE BYPASS MODE OF OPERATION.

         9. WHEN A NEW TOWER IS BROUGHT ON LINE THE SPEED OF THE TOWER FAN MOTOR SHALL GRADUALLY INCREASE AND WILL THEN BE ADJUSTED. WHEN MULTIPLE CELLS ARE OPERATING, THE SPEED OF EACH FAN WILL BE THE SAME EXCEPT WHEN A FAN IS BEING STARTED OR STOPPED.

         10. THE BAS WILL AUTOMATICALLY ALTERNATE THE STAGING OF THE COOLING TOWER CELL AND ASSOCIATED FANS IN ORDER TO EQUALIZE THE RUNTIME ON EACH FAN OR TOWER CELL. THE SYSTEM WILL ALSO BE CAPABLE OF OPERATING IN THE MANUAL MODE WHERE THE MAINTENANCE STAFF SELECTS THE COOLING TOWER CELL THAT WILL OPERATE WITH A PARTICULAR CHILLER. THIS SELECTION SHALL OCCUR WHEN THE CHILLER IS STARTED. IF A FAN FAILS TO START UPON RECEIVING A SIGNAL TO START, THE BAS WILL THEN ACTIVATE A LOCKOUT ALARM FOR THAT FAN AND SHALL TAKE THAT FAN OUT OF THE START SEQUENCE. THE BAS WILL THEN START THE FAN WITH THE SECOND LOWEST AMOUNT OF CUMULATIVE RUN TIME. THE LOCKOUT ALARM SHALL BE MANUALLY RESET IN ORDER FOR THAT PIECE OF EQUIPMENT TO BE PUT BACK INTO THE OPERATING SEQUENCE.

      ii. LSOB CHILLER PLANT, CONTROL SHALL BE THE SAME AS THAT IDENTIFIED FOR THE KEC, EXCEPT THAT THERE IS ONE TOWER BYPASS VALVE TO SERVE THE TWO TOWERS AND NO BYPASS VALVE ON THE INDIVIDUAL CHILLER CONDENSER SHELL.

         1. WHEN CHILLERS ARE DEENERGIZED THE TOWER WATER BYPASS CONTROL VALVE SHALL BE OPEN TO FULL BYPASS OF THE COOLING TOWERS.

         2. THE ISOLATION VALVE ON THE CONDENSER SHELL FOR THE SELECTED CHILLER SHALL BE OPENED.

         3. AFTER THE END SWITCH CONFIRMS THAT THE CONDENSER WATER ISOLATION VALVES HAVE FULLY OPENED TO THE POSITION INDICATED ABOVE. A CONDENSER WATER PUMP SHALL BE STARTED. THE SELECTION OF WHICH CONDENSER WATER PUMP TO RUN AND WHICH COOLING TOWER TO FLOW WILL BE BY THE BAS BASED ON RUN TIME.

         4. SHOULD A CONDENSER WATER PUMP FAIL TO START UPON RECEIVING A START SIGNAL, THE BAS WILL THEN ACTIVATE A LOCKOUT ALARM FOR THAT PUMP AND SHALL TAKE THAT PUMP OUT OF THE START SEQUENCE. THE BAS WILL THEN START THE STAND-BY PUMP. THE OPERATOR MUST MANUALLY RESET THE LOCKOUT ALARM PRIOR TO THAT PUMP BEING PLACED BACK INTO SERVICE.

         5. THE COOLING TOWER BYPASS CONTROL VALVE SHALL REMAIN IN THE TOWER BYPASS POSITION UNTIL THE TEMPERATURE OF THE CONDENSER WATER ELEVATES TO A PREDETERMINED TEMPERATURE AT WHICH TIME THE CONTROL VALVE WILL BE RELEASED TO ALLOW CONTROL OF FLOW ACROSS BOTH COOLING TOWERS.

         6. CONDENSER WATER SHALL FLOW OVER THE TOWERS AS THE FIRST STAGE OF CAPACITY CONTROL. AS THE CONDENSER WATER SUPPLY TEMPERATURE RISES, THE COOLING TOWER FAN ON ONE TOWER SHALL BE CONTROLLED, VIA THE TWO SPEED MOTOR STARTER, BY THE BAS IN ORDER TO MAINTAIN AN ADJUSTABLE CONDENSER WATER SUPPLY TEMPERATURE BETWEEN 75 DEG. (ADJUSTABLE) AND 85 DEG. (ADJUSTABLE). THE BAS WILL UTILIZE AN ALGORITHM IN ORDER TO DETERMINE THE MOST EFFICIENT SPEED OF THE RESPECTIVE TOWER FAN THAT WILL MAINTAIN THE CONDENSER WATER SUPPLY TEMPERATURE SET POINT. THIS ALGORITHM WILL TAKE INTO ACCOUNT THE APPROACH TEMPERATURE OF THE TOWERS, THE AMBIENT WET BULB TEMPERATURE, THE TEMPERATURE OF THE WATER IN THE SUMP AND THE ANTICIPATED LAG OF THE SYSTEM DUE TO THE VOLUME OF WATER IN THE SUMP. THE BAS SHALL THEN MAINTAIN THE CONDENSER WATER SUPPLY TEMPERATURE SET POINT BY SEQUENTIALLY STARTING AND STOPPING THE TWO SPEED FAN ON EACH OF THE TWO TOWERS. IF A FAN FAILS TO START UPON RECEIVING A SIGNAL TO START, THE BAS WILL ACTIVATE A ALARM FOR THAT FAN. THE LOCKOUT ALARM SHALL BE MANUALLY RESET IN ORDER FOR THAT PIECE OF EQUIPMENT TO BE PUT BACK INTO THE OPERATING SEQUENCE.

         7. WHEN THE COOLING TOWER BYPASS VALVE IS OPENED TO ALLOW CONDENSER WATER FLOW TO BYPASS THE COOLING TOWERS, THE COOLING TOWER FAN OR FANS SHALL STOP (IF RUNNING). THE COOLING TOWER FAN OR FANS SHALL NOT OPERATE WHEN THE TOWER IS OPERATING IN THE BYPASS MODE OF OPERATION.

         8. THE SYSTEM WILL BE CAPABLE OF OPERATING IN THE MANUAL MODE WHERE THE MAINTENANCE STAFF SELECTS THE COOLING TOWER THAT WILL OPERATE WITH A PARTICULAR CHILLER. THIS SELECTION SHALL OCCUR WHEN THE CHILLER IS STARTED.

2. ONCE CHILLED WATER FLOW THROUGH THE EVAPORATOR OF A PARTICULAR CHILLER IS CONFIRMED, THE CHILLER SHALL BE SIGNALED BY THE BAS TO START. THE INDIVIDUAL CHILLER'S CONTROLS WILL VERIFY FLOW THROUGH THE EVAPORATOR VIA SEPARATE DIFFERENTIAL PRESSURE SWITCHES THAT ARE WIRED DIRECTLY INTO THE CHILLER'S CONTROL PANEL. ONCE FLOW IN THE EVAPORATOR IS PROVEN BY THE CHILLERS INDIVIDUAL CONTROLS, THE CHILLER CONTROL PANEL SHALL RELEASE THAT CHILLER TO START.

3. IF THE OPERATOR DECIDES TO START ADDITIONAL CHILLERS, WITHIN THE SYSTEM, THE STARTUP SEQUENCE SHALL BE IDENTICAL EXCEPT THAT, IN THE KEC CHILLER PLANT, THE BAS SHALL SELECT THE COOLING TOWER CELL ASSOCIATED FAN AND THE PUMP WITH THE NEXT LOWEST AMOUNT OF RUNTIME COMPARED TO THE EQUIPMENT THAT IS OPERATING. IN THE LSOB CHILLER PLANT, THE SECOND CONDENSER WATER PUMP SHALL BE STARTED.

   a. THE AUTOMATIC ISOLATION CONTROL VALVES IN THE CHILLER ENTERING AND DISCHARGE LINES SHALL MODULATE OPEN SLOWLY IN ORDER TO PROVIDE TIME FOR THE PRIMARY PUMP VARIABLE SPEED MOTOR CONTROLLERS TO RAMP THE PUMPS UP SO THAT MINIMUM FLOW IS MAINTAINED AT THE OPERATING CHILLER. THE RATE AT WHICH THESE VALVES OPEN SHALL BE ADJUSTABLE.

   b. IF THE DIFFERENTIAL PRESSURE ACROSS THE OPERATING CHILLER OR CHILLERS FALLS TO A POINT ASSOCIATED WITH A LOW FLOW CONDITION, THE BAS WILL SIGNAL THE MODULATING CONTROL VALVE IN THE "MINIMUM CHILLER FLOW" BY-PASS LINE TO OPEN AS REQUIRED TO MAINTAIN MINIMUM FLOW THROUGH ALL OPERATING CHILLERS.

      i. ONCE THE FLOW RATE IN THE SYSTEM IS AT OR ABOVE THE MINIMUM FLOW OF ALL OPERATING CHILLERS, THE MODULATING CONTROL VALVE IN THE "MINIMUM CHILLER FLOW" BY-PASS PIPE WILL BE MODULATED TO THE CLOSED POSITION.

      ii. A BALANCE VALVE SHALL BE PROVIDED IN THE DISCHARGE PIPING FROM ALL CHILLERS IN THE KEC IN ORDER TO ALLOW THE TAB TO EQUALIZE THE PRESSURE DROP THROUGH EACH PARALLEL CHILLER CIRCUIT IN THE CHILLER PLANT. THIS WILL ASSURE EQUAL DISTRIBUTION OF FLOW THROUGH THE OPERATING CHILLERS.

4. CHILLED WATER PIPING SYSTEM

   a. THE OPERATOR SHALL DETERMINE WHICH CHILLED WATER PLANT OR WHAT COMBINATION OF THE CHILLED WATER PLANTS WILL BE UTILIZED TO PROVIDE COOLING TO THE VARIOUS BUILDINGS WITHIN THE CORE STATE OF KANSAS CAPITOL COMPLEX.

   b. IF THE DECISION IS MADE TO CHANGE THE OPERATION OF THE CHILLED WATER SYSTEM FROM ONE "CASE" TO ANOTHER, THE CHILLERS AND ALL PUMPS RUNNING IN THE CURRENT CONFIGURATION SHALL BE DE-ENERGIZED AND THE DESIRED "CASE" SHALL BE SELECTED BY THE OPERATOR.

   c. THE TWO POSITION CONTROL VALVES IN THE PIPING SYSTEM SHALL BE ADJUSTED TO THE OPEN/CLOSED POSITION AS INDICATED IN THE VALVE POSITION SCHEDULE. END SWITCHES SHALL BE PROVIDED IN THE ACTUATOR OF EACH VALVE. INDICATION OF PROPER VALVE POSITION SHALL BE IDENTIFIED ON A GRAPHIC ON THE BAS HEAD END. SHOULD A CONTROL VALVE NOT CYCLE TO THE CORRECT POSITION, THE BAS SYSTEM GRAPHIC SHALL SO INDICATE BY "ALARM" AND A RED ICON OVER ANY OF THE VALVES THAT ARE INCORRECTLY POSITIONED. ALL CHILLERS AND PUMPS WILL BE LOCKED OUT UNTIL SUCH TIME AS THE PROPER VALVE POSITION IS ACHIEVED AND PROVEN BY THE RESPECTIVE END SWITCHES IN EACH VALVE.

   d. THERE ARE MODULATING CONTROL VALVES IN "CROSS OVER" PIPING LOCATED IN EACH THE KEC AND THE LSOB. THESE MODULATING VALVES, IDENTIFIED AS "MINIMUM CHILLER FLOW" BY-PASS, ARE PROVIDED TO ACCOMMODATE MINIMUM CHILLER FLOW REQUIREMENTS WHEN CONDITIONS ARE SUCH THAT FLOW THRU THE SYSTEM IS LOWER THAN THE MINIMUM FLOW REQUIRED BY THE RESPECTIVE CHILLER.

   e. EACH NEW CHILLED WATER PRIMARY PUMP IN THE KEC AND THE EXISTING PRIMARY PUMPS IN THE LSOB ARE PROVIDED WITH VARIABLE SPEED MOTOR CONTROLLERS. THE EXISTING AND NEW CHILLED WATER BUILDING CIRCULATING PUMPS IN THE KSH AND THE MB ARE ALSO PROVIDED WITH VARIABLE SPEED MOTOR CONTROLLERS.

   f. WHEN THE KEC CHILLED WATER PLANT IS OPERATING, THE VARIABLE SPEED MOTOR CONTROLLER ON THE PRIMARY PUMPS IN THE KEC SHALL BE MODULATED TO MAINTAIN A PREDETERMINED DIFFERENTIAL PRESSURE (ESTABLISHED BY TAB) ACROSS THE SUPPLY AND RETURN MAINS.

   g. WHEN THE LSOB CHILLED WATER PLANT IS OPERATING, THE VARIABLE SPEED MOTOR CONTROLLER ON THE LSOB CHILLED WATER CIRCULATING PUMPS SHALL BE MODULATED TO MAINTAIN A PREDETERMINED DIFFERENTIAL PRESSURE (ESTABLISHED BY TAB) AT THE EXISTING DIFFERENTIAL PRESSURE SENSOR THAT IS LOCATED IN THE LSOB CHILLED WATER SYSTEM AT THE TOP FLOOR OF THE NORTH END OF THE BUILDING.

   h IN THE KEC, KSH AND LSOB.

   i. A TWO POSITION VALVE SHALL BE PROVIDED IN A PUMP BYPASS LINE LOCATED IN EACH BUILDING. THIS VALVE SHALL BE OPEN WHEN THE CHILLED WATER SYSTEM IS OPERATING TO ALLOW PRESSURE AND THUS FLOW DEVELOPED BY THE PRIMARY PUMPING SYSTEM TO BE UTILIZED TO THE FULLEST EXTENT TO CIRCULATE THE RESPECTIVE BUILDING'S CHILLED WATER SYSTEM. NOTE: THERE ARE NO BUILDING CIRCULATORY PUMPS IN THE KEC. CIRCULATION WITHIN THIS BUILDING WALL BE PROVIDED BY THE KEC CHILLER PLANT PRIMARY PUMPS.

      ii. DIFFERENTIAL PRESSURE SENSORS LOCATED ACROSS THE SUPPLY AND RETURN PIPING SYSTEM AT LOCATIONS IN EACH RESPECTIVE BUILDING'S CHILLED WATER PIPING SYSTEM ARE PROVIDED TO CONTROL THE VARIABLE SPEED PUMP CONTROL AS REQUIRED TO MAINTAIN REQUIRED FLOW IN THE RESPECTIVE BUILDING. THIS SENSOR WAS PREVIOUSLY INSTALLED AND IS LOCATED AT THE TOP OF THE NORTH END OF THE CHILLED WATER PIPING SYSTEM IN THE LSOB. MULTIPLE DIFFERENTIAL PRESSURE SENSORS HAVE PREVIOUSLY BEEN PROVIDED IN THE KSH. IN THE KSH, THE BAS SHALL CONTROL TO MAINTAIN MINIMUM DIFFERENTIAL PRESSURE AT EACH OF THE DIFFERENTIAL PRESSURE SENSORS. IN THE KEC A NEW DIFFERENTIAL PRESSURE SENSOR SHALL BE PROVIDED AT A LOCATION APPROXIMATELY 2/3 OF THE TOTAL PIPING SYSTEM DISTANCE FROM THE PRIMARY CHILLED WATER CIRCULATING PUMPS.

      iii. THE BAS WILL MODULATE THE VARIABLE SPEED OF THE CHILLED WATER PUMPS IN EACH RESPECTIVE BUILDING WHERE CHILLED WATER PUMPS ARE PROVIDED AS REQUIRED TO MAINTAIN MINIMUM SET PRESSURE AT ALL DIFFERENTIAL PRESSURE SENSORS WITHIN THE RESPECTIVE BUILDING DURING TIMES WHEN PRESSURES PROVIDED BY THE PRIMARY CHILLED WATER PUMPS DO NOT PROVIDE ADEQUATE PRESSURE IN THE BUILDING PIPING SYSTEM.

   J. MEMORIAL BUILDING CHILLER

      i. WHEN THE OPERATOR SELECTS THE MB CHILLER TO COOL THE MB, THE AUTOMATIC ISOLATION CONTROL VALVES IN THE PIPING FEEDING THE MB FROM THE LSOB SHALL BE CLOSED AND THE ISOLATION CONTROL VALVES IN THE SUPPLY AND RETURN PIPING TO THE MB CHILLER SHALL BE OPENED.

      ii. THE OPERATING CHILLED WATER PUMP SHALL BE ENERGIZED AND ONCE FLOW IS PROVEN AT THE MB CHILLER, THE CHILLER SHALL BE RELEASED TO OPERATE.

      iii. CHILLED WATER SUPPLY TEMPERATURE SHALL BE CONTROLLED BY THE INTEGRAL CHILLER CONTROLLER, LOCATED ON THE MB CHILLER.

   K. A TWO POSITION CONTROL VALVE IS PROVIDED IN THE PIPING FEEDING THE EXPANSION TANKS IN EACH THE LSOB AND THE KEC WHEN THE KEC CHILLERS ARE OPERATING THE CONTROL VALVE ON THE EXPANSION TANKS IN THE KEC SHALL BE OPEN. WHEN THE LSOB CHILLERS ARE OPERATING, THE CONTROL VALVE ON THE EXPANSION TANKS IN THE LSOB SHALL BE OPEN. WHEN THE CHILLERS IN EITHER THE KEC OR THE LSOB ARE DEENERGIZED, THE CONTROL VALVE IN THE PIPING FEEDING THE EXPANSION TANKS IN THE BUILDING WITH THE CHILLERS DEENERGIZED SHALL BE CLOSED.

5. HEAT RECOVERY CONTROL

   a. THE TWO KSH CHILLERS ARE EACH PROVIDED WITH AN ADDITIONAL "HEAT RECOVERY" CONDENSER. IN THE HEAT RECOVERY MODE, THE HEAT RECOVERY CONDENSER AND THE PRIMARY CONDENSER REFRIGERANT FLOW SHALL BE MODULATED TO SATISFY THE PRIMARY FUNCTION OF THE CHILLER, MAINTAINING CHILLED WATER SET POINT FOR COOLING. DURING THE HEATING SEASON WHEN SIMULTANEOUS BUILDING MECHANICAL COOLING AND HEATING IS REQUIRED, HEAT GENERATED IN THE OPERATING HEAT RECOVERY CHILLER SHALL BE REJECTED TO THE HOT WATER HEATING SYSTEM. IF THERE IS AN OVERABUNDANCE OF REJECTED HEAT, THE EXCESS ENERGY SHALL BE REJECTED TO THE COOLING TOWER. A MODULATING BYPASS CONTROL VALVE SHALL BE PROVIDED SO THAT HEAT RECOVERY HOT WATER FLOW WILL BE CIRCULATED THROUGH THE HEAT RECOVERY BARREL OF THE OPERATING HEAT RECOVERY CHILLER OR WILL BYPASS THAT HEAT RECOVERY BARREL. AS PREVIOUSLY STATED, A MODULATING BYPASS CONTROL VALVE SHALL BE PROVIDED SO THAT CONDENSER WATER FLOW WILL BE CIRCULATED THROUGH THE CONDENSER BARREL OF THE OPERATING HEAT RECOVERY CHILLER OR WILL BYPASS THAT CONDENSER BARREL. THE INTERNAL CHILLER CONTROLS WILL CONTROL BOTH MODULATING 3 WAY CONTROL VALVES.

   b. THE HOT WATER HEATING SYSTEM WILL BE ENABLED WHEN THE OUTSIDE AIR TEMPERATURE IS AT OR BELOW 55 DEGREES F. (ADJUSTABLE) OR AS ENABLED BY BUILDING OPERATORS.

   c. THE KEC CONDENSER WATER SYSTEM SHALL BE STARTED AND FLOW VERIFIED AS PREVIOUSLY INDICATED. THE HOT WATER SYSTEM CIRCULATING PUMPS SHALL BE ENERGIZED AND FLOW SHALL BE VERIFIED BY DIFFERENTIAL PRESSURE SWITCH AT THE OPERATING CIRCULATING PUMP. THE 3 WAY HEAT RECOVERY CONTROL VALVE AND THE 3 WAY CONDENSER WATER CONTROL VALVE OF A SELECTED HEAT RECOVERY CHILLER SHALL EACH INITIALLY BE SET TO BYPASS THE HEAT RECOVERY BARREL AND THE CONDENSER BARREL RESPECTIVELY. THE BUILDING HEATING PUMP, SHALL BE STARTED AND FLOW VERIFIED BY DIFFERENTIAL PRESSURE SWITCH AT THE OPERATING PUMP. ONCE CONDENSER WATER FLOW AND HOT WATER SYSTEM FLOW IN BOTH THE BUILDING CIRCULATING SYSTEM AND IN THE HEAT RECOVERY CIRCULATING SYSTEM ARE VERIFIED, THE HEAT RECOVERY SYSTEM SHALL BE RELEASED TO OPERATE.

   d. THE SUPPLY AND RETURN HOT WATER TEMPERATURE ENTERING AND LEAVING THE HEAT RECOVERY BARREL OF THE HEAT RECOVERY CHILLER SHALL BE MONITORED BY THE BAS.

   e. THE UNITARY CONTROL ON THE HEAT RECOVERY CHILLER SHALL MODULATE BOTH THE HEAT RECOVERY FLOW AND THE CONDENSER WATER FLOW AS REQUIRED TO LIMIT THE HOT WATER SUPPLY TEMPERATURE TO A MAXIMUM OF 110 DEG. F (ADJUSTABLE).

   f. THE BAS SHALL MONITOR THE HEAT RECOVERY CONDENSER LEAVING WATER TEMPERATURE AND THE TEMPERATURE OF THE HOT WATER RETURN AT THE SUCTION OF THE HOT WATER CIRCULATING PUMPS. NOTE THAT THIS IS DOWNSTREAM OF THE POINT THAT THE HOT WATER SUPPLY FROM THE HEAT RECOVERY CHILLER CONNECTS TO THE BUILDING HOT WATER RETURN PIPING.

   g. IF THE HOT WATER TEMPERATURE AT THE SUCTION OF THE HOT WATER HEATING SYSTEM CIRCULATING PUMPS IS BELOW 110 DEG. F. (ADJUSTABLE) THE CONTROL VALVE ON ONE OR MORE OF THE EXISTING BUILDING HEATING SYSTEM HEAT EXCHANGERS SHALL BE MODULATED OPEN AS REQUIRED TO RAISE THE TEMPERATURE OF THE HOT WATER HEATING SYSTEM UP TO THE TEMPERATURE REQUIRED TO PROVIDE ADEQUATE HEAT TO THE BUILDING. IF THE HOT WATER TEMPERATURE AT THE SUCTION OF THE HOT WATER HEATING SYSTEM CIRCULATING PUMPS IS AT OR ABOVE 110 DEG. F. (ADJUSTABLE) THE CONTROL VALVE ON EACH OF THE EXISTING BUILDING HEATING SYSTEM HEAT EXCHANGERS SHALL BE MODULATED CLOSED PROVIDED THE TEMPERATURE OF THE HOT WATER HEATING SYSTEM IS OF A TEMPERATURE REQUIRED TO PROVIDE ADEQUATE HEAT TO THE BUILDING.

   h. THE CHILLER CONDENSER SHELL BYPASS CONTROL VALVE AND THE HEAT RECOVERY SHELL BYPASS CONTROL VALVE SHALL EACH BE MODULATED BY THE INDIVIDUAL CHILLER CONTROL SYSTEM AS REQUIRED TO MAINTAIN CHILLED WATER SET POINT, TO PREVENT THE TEMPERATURE OF THE HEAT RECOVERY HOT WATER FROM ELEVATING ABOVE THE MAXIMUM TEMPERATURE OF 110 DEG. F. (ADJUSTABLE) AND TO PREVENT THE CHILLERS FROM ENTERING SURGE CONDITIONS.

   i. THE CHILLER CONTROLLER WILL MODULATE THE FLOW OF REFRIGERANT THROUGH THE HEAT RECOVERY BARREL AND THE CONDENSER BARREL TO BEST MATCH THE DESIRED HOT WATER TEMPERATURE WITHOUT COMPROMISING THE CHILLED WATER SET POINT.

6. REFRIGERANT MONITORING AND EXHAUST

   a. THE REFRIGERANT MONITORING AND EXHAUST SYSTEM SHALL CONSIST OF A CENTRAL CONTROL PANEL, TEMPERATURE SENSOR, REFRIGERANT SENSOR (R123) AN OUTSIDE AIR INTAKE LOUVER WITH AUTOMATIC DAMPER, AN EXHAUST FAN WITH TWO (2) SPEED MOTOR AND EXHAUST DAMPER AN ALARM HORN AND BEACON, AN EMERGENCY POWER OFF (EPO) PUSHBUTTON AND A REMOTE HIGH FAN SPEED OVERRIDE PUSHBUTTON.

   b. UPON A SIGNAL FROM THE REFRIGERANT MONITORING PANEL THAT REFRIGERANT LEVELS, ABOVE THE PREDETERMINED THRESHOLD LIMIT VALUE (TLV) AS SENSED BY THE REFRIGERANT SENSOR, INTAKE AND EXHAUST DAMPERS SHALL BE OPENED AND THE EXHAUST FAN SHALL BE ENERGIZED AT HIGH SPEED. THE CHILLERS SHALL BE SHUT DOWN AND THE ALARM HORN/LIGHT SHALL AUDIBLY AND VISUALLY NOTIFY BUILDING OCCUPANTS. A HIGH TLV ALARM SHALL BE MAPPED ON THE JCI HEAD END.

   c. A REMOTE EMERGENCY POWER OFF "EPO" SWITCH SHALL BE PROVIDED ON THE EXTERIOR OF THE ROOM WHERE INDICATED ON PLANS. DEPRESSING THIS PUSHBUTTON SHALL OPEN INTAKE AND EXHAUST DAMPERS, START THE EXHAUST FAN ON HIGH SPEED SHALL SHUT DOWN ALL CHILLERS.

   d. A TWO POSITION "AUTO"/"HIGH FAN SPEED" SWITCH SHALL BE PROVIDED ON THE EXTERIOR OF THE ROOM IN LOCATION AS INDICATED ON THE PLANS. SWITCHING THE CONTROL TO THE "HIGH FAN SPEED" SETTING SHALL OPEN THE INTAKE AND EXHAUST DAMPERS AND SHALL START THE FAN ON HIGH SPEED. MANUAL CONTROL OF THE EXHAUST FAN SHALL BE INDICATED AT THE JCI HEAD END.

   IT IS NOT THE INTENT OF THE DRAWINGS TO REPLACE OR REWORK THIS CONTROLS THAT ARE EXISTING.

HTK ARCHITECTS PA
9300 W 110TH ST STE 130
OVERLAND PARK KANSAS 66210
P: 913 663 5373
WWW.HTKARCHITECTS.NET

LS&A Latimer Sommers & Associates, P.A.
CONSULTING ENGINEERS
3639 SW Summerfield Drive, Suite A
Topeka, Kansas 66614-3974
Telephone: (785) 233-3232
FAX: (785) 233-0647
Email: lsapa@lsapa.com
LSA PROJECT NO. 1402032

WILLIAM R. GASSETT LICENS

HOT WATER SYSTEM INPUT/OUTPUT SCHEDULE			
ANALOG INPUTS		BINARY INPUTS	
AI-1	HOT WATER RETURN TEMPERATURE	BI-1	HOT WATER PUMP 1 STATUS
AI-2	HOT WATER SUPPLY TEMPERATURE	BI-2	HOT WATER PUMP 2 STATUS
AI-3	SYSTEM DIFFERENTIAL PRESSURE		
ANALOG OUTPUTS		BINARY OUTPUTS	
AO-1	HX 1/3 VALVE CONTROL	BO-1	HOT WATER PUMP 1 START/STOP
AO-2	HX 2/3 VALVE CONTROL	BO-2	HOT WATER PUMP 2 START/STOP
AO-3	HOT WATER PUMP 1 VFD CONTROL	BO-3	OPEN TO HEAT EXCHANGER FLOW
AO-4	HOT WATER PUMP 2 VFD CONTROL	BO-4	OPEN TO HEAT RECOVERY CONDENSER FLOW
AO-5	HOT WATER BY-PASS VALVE CONTROL		

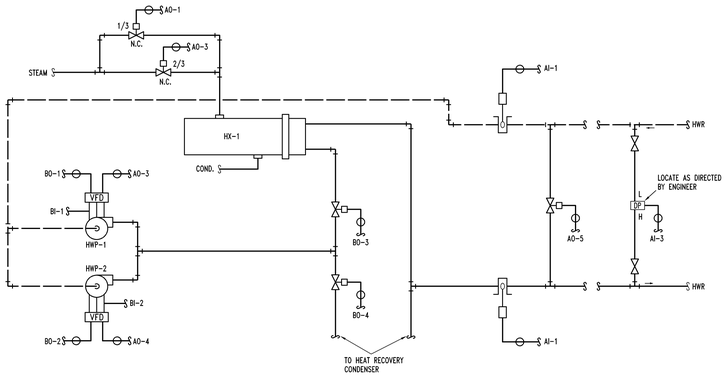

C3 Hot Water System Schematic
No Scale
New Hot Water System in KSH NW Mech Vault - Sim.

BOILER ROOM/MAU INPUT/OUTPUT SCHEDULE			
ANALOG INPUTS		BINARY INPUTS	
AI-1	BOILER COMMON HEADER PRESSURE	BI-1	MAU-B1 STATUS
AI-2	BOILER ROOM STATIC PRESSURE	BI-2	MAU-B2 STATUS
AI-3	MAU-B1 DISCHARGE AIR TEMPERATURE	BI-3	MAU-B3 STATUS
AI-4	MAU-B2 DISCHARGE AIR TEMPERATURE		
AI-5	MAU-B3 DISCHARGE AIR TEMPERATURE		
ANALOG OUTPUTS		BINARY OUTPUTS	
AO-1	MAU-B1 STEAM VALVE CONTROL		
AO-2	MAU-B2 STEAM VALVE CONTROL		
AO-3	MAU-B3 STEAM VALVE CONTROL		
AO-4	RELIEF DAMPER 1 CONTROL		
AO-5	RELIEF DAMPER 2 CONTROL		
AO-6	RELIEF DAMPER 3 CONTROL		

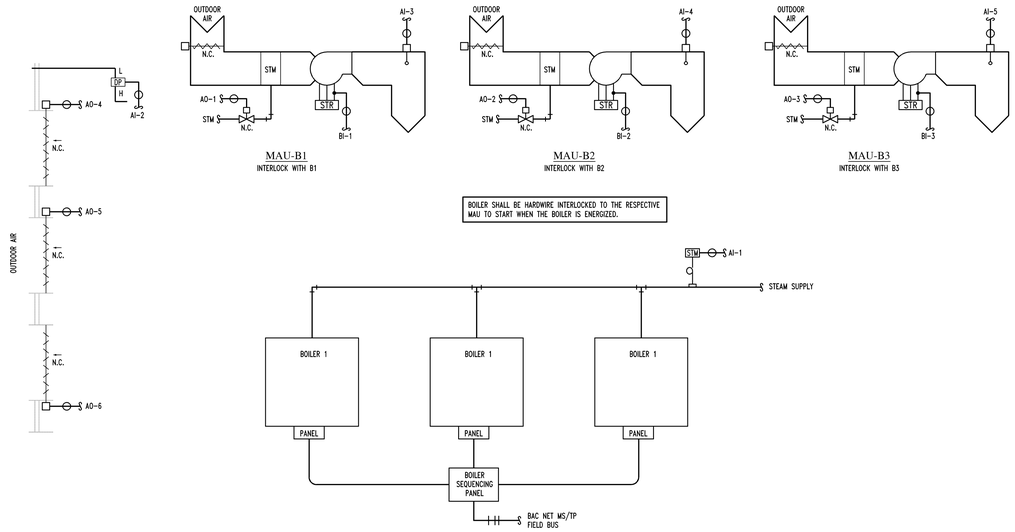

A3 Boiler Room Schematic
No Scale

AIR HANDLING UNIT 1 INPUT/OUTPUT SCHEDULE			
ANALOG INPUTS		BINARY INPUTS	
AI-1	RETURN AIR TEMPERATURE	BI-1	FILTER STATUS
AI-2	MIXED AIR TEMPERATURE	BI-2	LOW TEMPERATURE SWITCH STATUS
AI-3	DISCHARGE AIR TEMPERATURE	BI-3	SUPPLY FAN STATUS
AI-4	DUCT STATIC PRESSURE	BI-4	HIGH STATIC SWITCH STATUS
ANALOG OUTPUTS		BINARY OUTPUTS	
AO-1	OUTDOOR & RETURN AIR DAMPER CONTROL	BO-1	SUPPLY FAN START/STOP
AO-2	RELIEF AIR DAMPER CONTROL		
AO-3	HOT WATER VALVE CONTROL		
AO-4	CHILLED WATER VALVE CONTROL		
AO-5	SUPPLY FAN VFD CONTROL		

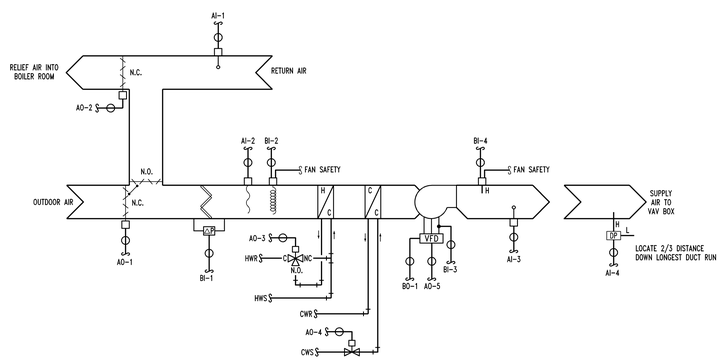

C1 AHU-1 Control Schematic
No Scale

AIR HANDLING UNIT 2 INPUT/OUTPUT SCHEDULE			
ANALOG INPUTS		BINARY INPUTS	
AI-1	RETURN AIR TEMPERATURE	BI-1	FILTER STATUS
AI-2	MIXED AIR TEMPERATURE	BI-2	LOW TEMPERATURE SWITCH STATUS
AI-3	DISCHARGE AIR TEMPERATURE	BI-3	SUPPLY FAN STATUS
AI-4	ZONE TEMPERATURE		
AI-5	ZONE TEMPERATURE SETPOINT		
ANALOG OUTPUTS		BINARY OUTPUTS	
AO-1	OUTDOOR & RETURN AIR DAMPER CONTROL	BO-1	SUPPLY FAN START/STOP
AO-2	RELIEF AIR DAMPER CONTROL	BO-2	DX STAGE 1 ENABLE
AO-3	HOT WATER VALVE CONTROL	BO-3	DX STAGE 2 ENABLE

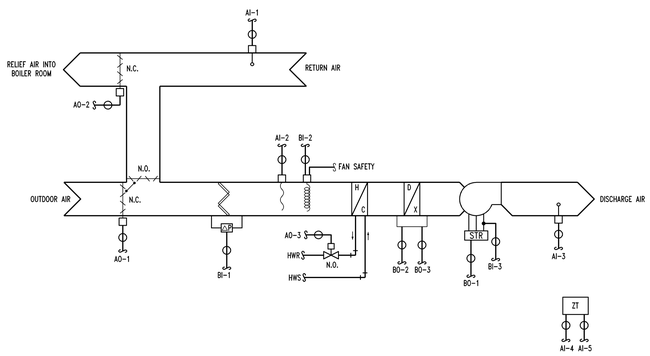

B1 AHU-2 Control Schematic
No Scale

FAN COIL UNITS INPUT/OUTPUT SCHEDULE			
ANALOG INPUTS		BINARY INPUTS	
AI-1	DISCHARGE AIR TEMPERATURE	BI-1	SUPPLY FAN STATUS
AI-2	ZONE TEMPERATURE	BI-2	OCCUPANCY OVERRIDE SWITCH STATUS
AI-3	ZONE TEMPERATURE SETPOINT		
ANALOG OUTPUTS		BINARY OUTPUTS	
AO-1	HOT WATER VALVE CONTROL	BO-1	SUPPLY FAN START/STOP
AO-2	CHILLED WATER VALVE CONTROL		

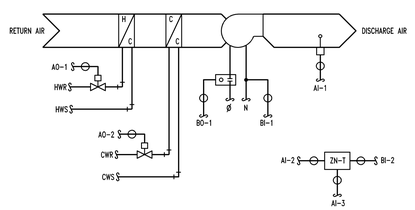

A1 Fan Coil Schematic
No Scale

HTK ARCHITECTS PA
9300 W. 110TH ST. STE. 130
OVERLAND PARK KANSAS 66210
P: 913.663.5373
9105 KANSAS AVE.
TOPEKA KANSAS 66612
P: 785.266.5373
WWW.HTKARCHITECTS.NET

LS&A
Latimer Sommers & Associates, P.A.
CONSULTING ENGINEERS
3639 SW Summerfield Drive, Suite A
Topeka, Kansas 66614-3974
Telephone: (785) 233-3232
FAX: (785) 233-0647
Email: lsapa@lsapa.com
LSA PROJECT NO. 1402032

WILLIAM R. GASSETT LICENSED PROFESSIONAL ENGINEER 10530 4-15-15

DATE:
- 4-15-15

REVISED DATE:
- 12-18-14
- 2-9-15
- 3-10-15

HTK PROJECT NUMBER:
- 1410.03

Department of Administration
Office of Facilities and
Procurement Management
800 SW Jackson, Suite 700
Topeka, Kansas 66612-1216
Phone 785-296-8899
FAX 785-296-3456

STATE OF KANSAS
STATE OF KANSAS ENERGY & SERVICE CENTER
Seventh & Van Buren Street, Topeka, Kansas
BUILDING NUMBER 17300.000038
DATE: 4-15-15 DRAWN BY: CAD CHECKED BY: WRB REV: WRB

BUILDING AUTOMATION SYSTEM DIAGRAMS

A-012651

ME303

CONSTRUCTION DOCUMENTS

JCSBC
2-2-2016
Att.9G.--0074

...ME303_Temperature Controls.dwg 04/14/15 CTC CTC CTW

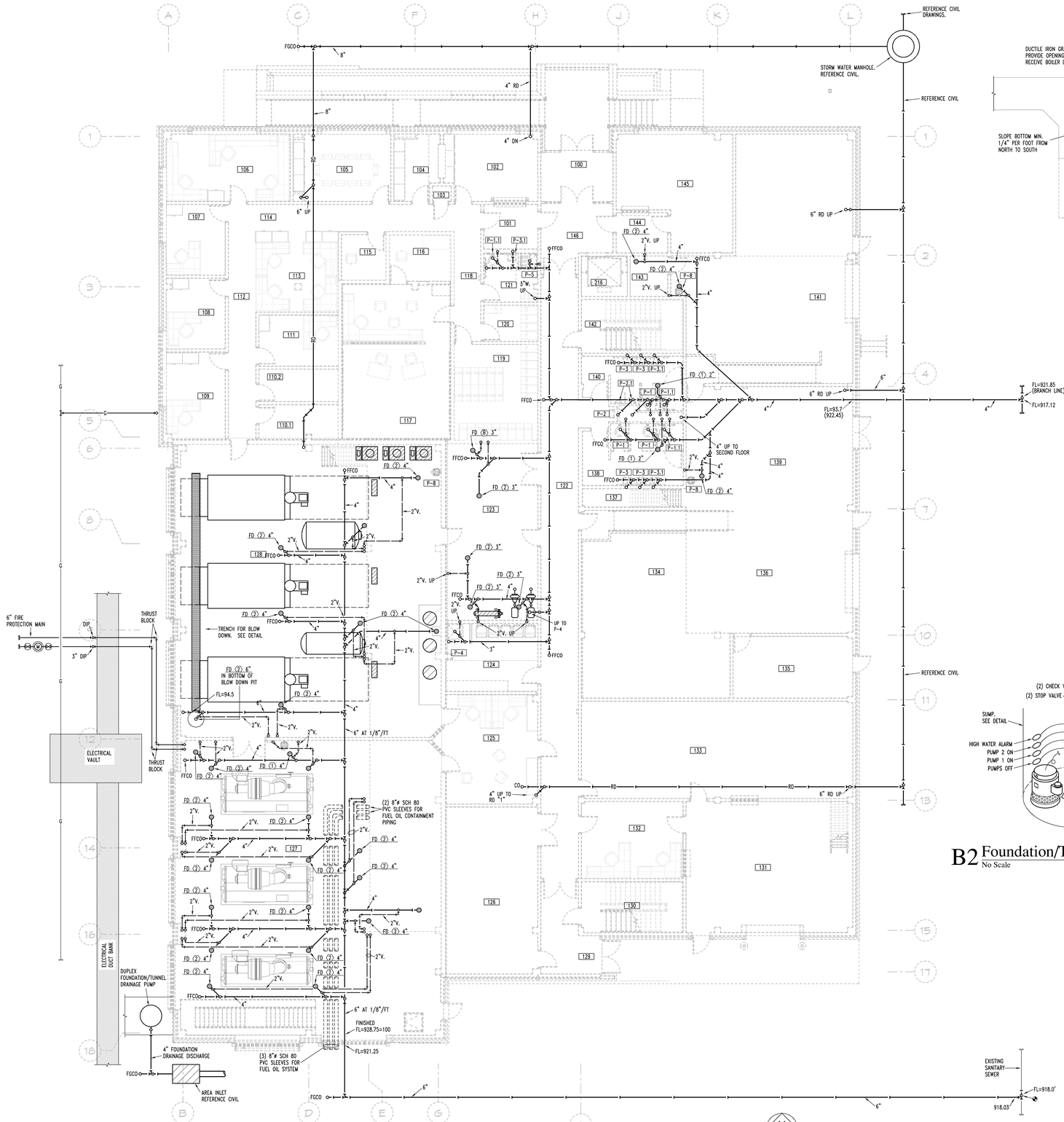

B1 First Floor Plan
1/8"=1'-0" Below-Grade Plumbing

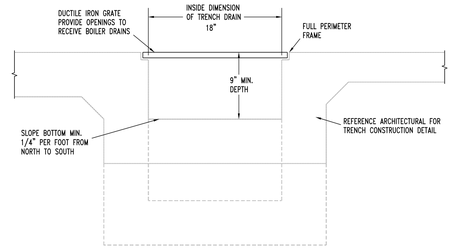

B4 Trench Drain
1 1/2" = 1'-0"

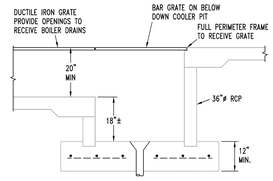

A4 Trench Connection to Blow Down Cooler Pit
1/2" = 1'-0"

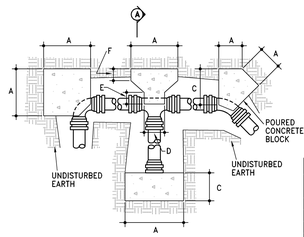

PLAN

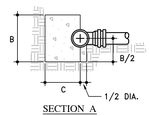

SECTION A

BLOCKING DIMENSIONS IN INCHES																	
PIPE DIA.	TEES						PLUGS			90° BEND			45° BEND			22.5° BEND	
	A	B	C	D	E	F	A	B	C	A	B	C	A	B	C	A	B	C
4"	13	22	9	13	–	–	13	22	9	18	12	9	9	12	12	6	12	12
6"	24	30	16	16	6	6	24	30	12	24	18	16	10	24	12	7	18	12
8"	34	32	21	18	7	6	34	32	18	30	26	21	13	36	18	9	24	18
10"	40	42	23	22	8	6	40	42	24	35	34	24	18	38	27	12	30	27

A3 Concrete Blocking Detail
No Scale

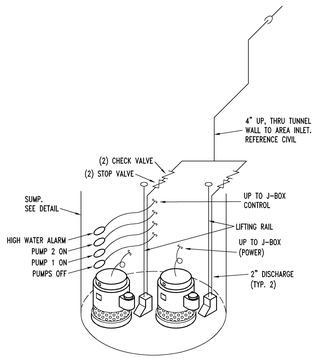

B2 Foundation/Tunnel Drainage Sump
No Scale

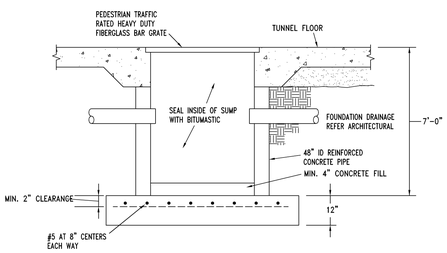

A2 Foundation/Tunnel Drainage Pump
No Scale
Elevator Sump - Similar Except 24" I.D. and 3'-0" deep

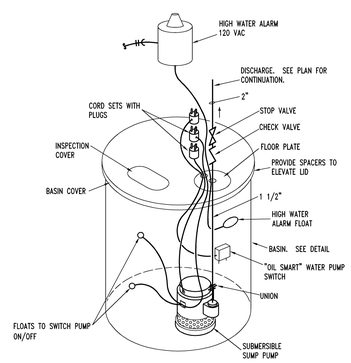

A1 Sump Pump Detail
No Scale Elevator Pit

HTK ARCHITECTS PA
9200 W. 110TH ST. STE. 150
OVERLAND PARK, KANSAS 66210
P: 913.663.5373
9105 KANSAS AVE.
TOPEKA KANSAS 66612
P: 785.266.5373
WWW.HTKARCHITECTS.NET

LS&A
Latimer Sommers & Associates, P.A.
CONSULTING ENGINEERS
3639 SW Summerfield Drive, Suite A
Topeka, Kansas 66614-3974
Telephone: (785) 233-3232
FAX: (785) 233-0647
Email: lsapa@lsapa.com
LSA PROJECT NO. 1402032

WILLIAM R. BASSETT
LICENSED
10530
PROFESSIONAL ENGINEER
4-15-15

Department of Administration
Office of Facilities and
Procurement Management
800 SW Jackson, Suite 700
Topeka, Kansas 66612-1216
Phone 785-296-8899
FAX 785-296-3456

DATE:
- 4-15-15

REVISED DATE:
- 12-18-14
- 2-9-15
- 3-10-15

HTK PROJECT NUMBER:
- 1410.03

STATE OF KANSAS
STATE OF KANSAS ENERGY & SERVICE CENTER
Seventh & Van Buren Street, Topeka, Kansas
BUILDING NUMBER 17300-000038
DRAWN BY: CAD CHECKED BY: WRB REV: WRB
DATE: 4-15-15

FIRST FLOOR PLAN - BELOW-GRADE PLUMBING

A-012651

PH101

CONSTRUCTION DOCUMENTS

JCSBC
2-2-2016
Att 9G--0075

... PH101.dwg 04/15/15 20

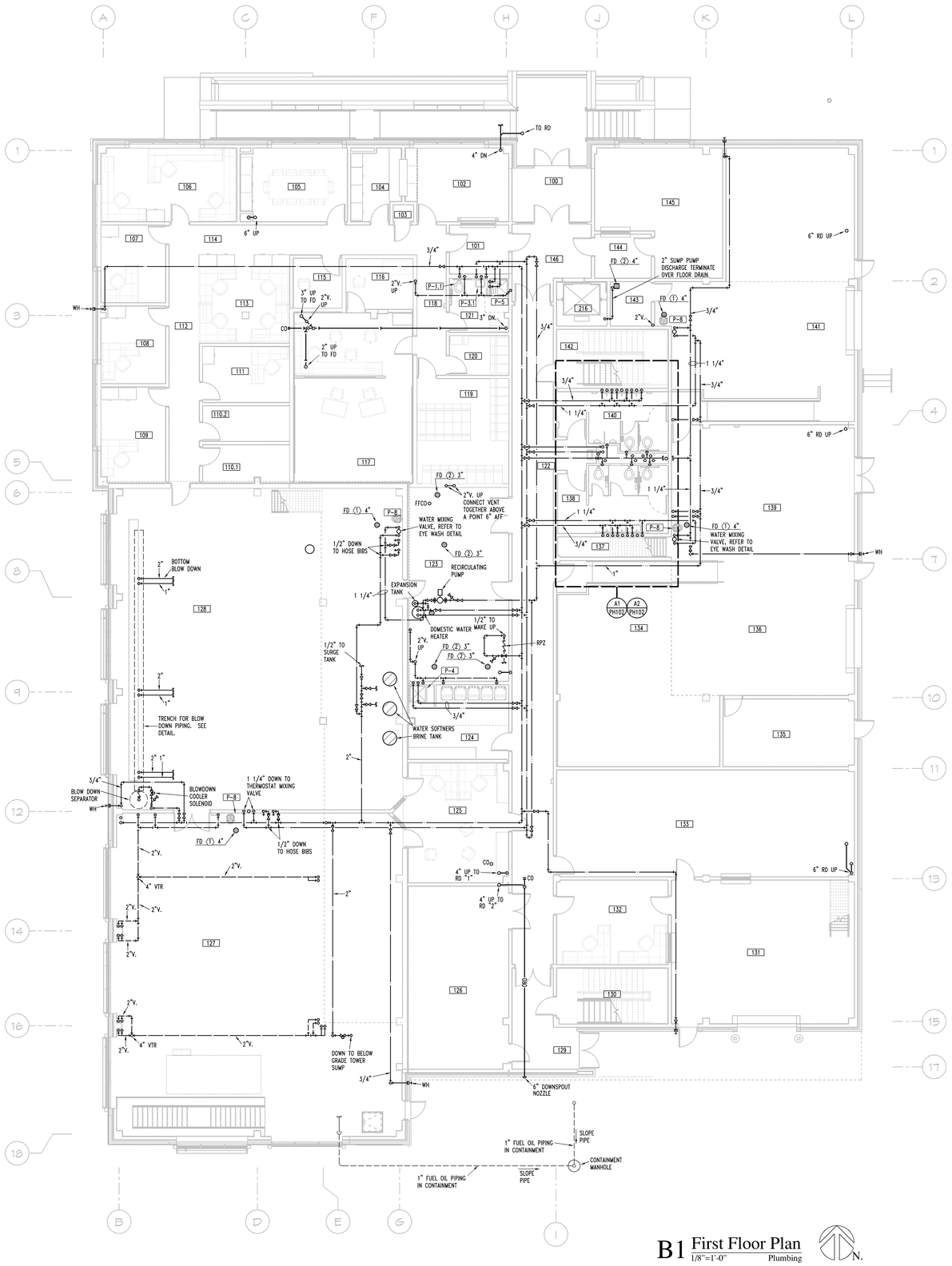

B1 First Floor Plan
1/8"=1'-0" Plumbing

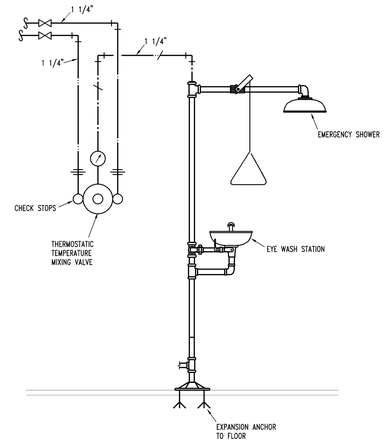

A3 Emergency Shower and Eyewash Detail
No Scale

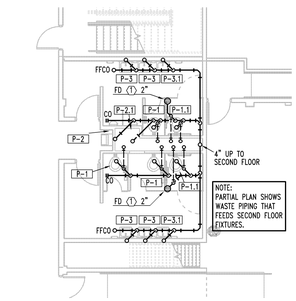

A2 Partial First Floor Plan
1/8"=1'-0" Plumbing

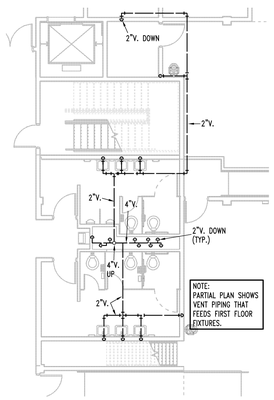

A1 Partial First Floor Plan
1/8"=1'-0" Plumbing

HTK ARCHITECTS PA
9300 S. KANSAS AVE. TOPEKA, KANSAS 66612 P. 785-266-5373
9300 W. 110TH ST. STE. 150 OVERLAND PARK KANSAS 66210 P. 913-663-5373
WWW.HTKARCHITECTS.NET

LS&A Latimer Sommers & Associates, P.A.
CONSULTING ENGINEERS
3639 SW Summerfield Drive, Suite A
Topeka, Kansas 66614-3974
Telephone: (785) 233-3232
FAX: (785) 233-0647
Email: lsapa@lsapa.com
LSA PROJECT NO. 1402032

WILLIAM R. BASSETT LICENSED 10530 PROFESSIONAL ENGINEER
4-15-15

DATE:
- 4-15-15

REVISED DATE:
- 12-18-14
- 2-9-15
- 3-10-15

HTK PROJECT NUMBER:
- 1410.03

Department of Administration
Office of Facilities and Procurement Management
800 SW Jackson, Suite 700
Topeka, Kansas 66612-1216
Phone 785-296-8899
FAX 785-296-3456

STATE OF KANSAS
STATE OF KANSAS ENERGY & SERVICE CENTER
Seventh & Van Buren Street, Topeka, Kansas
BUILDING NUMBER 17300-00038
DATE: 4-15-15 DRAWN BY: CAD CHECKED BY: WRB REV: WRB

FIRST FLOOR PLAN - PLUMBING

A-012651

PH102

CONSTRUCTION DOCUMENTS

JCSBC
2-2-2016
Att.9G.--0076

... PH102.dwg 1 04/15/15 GTC

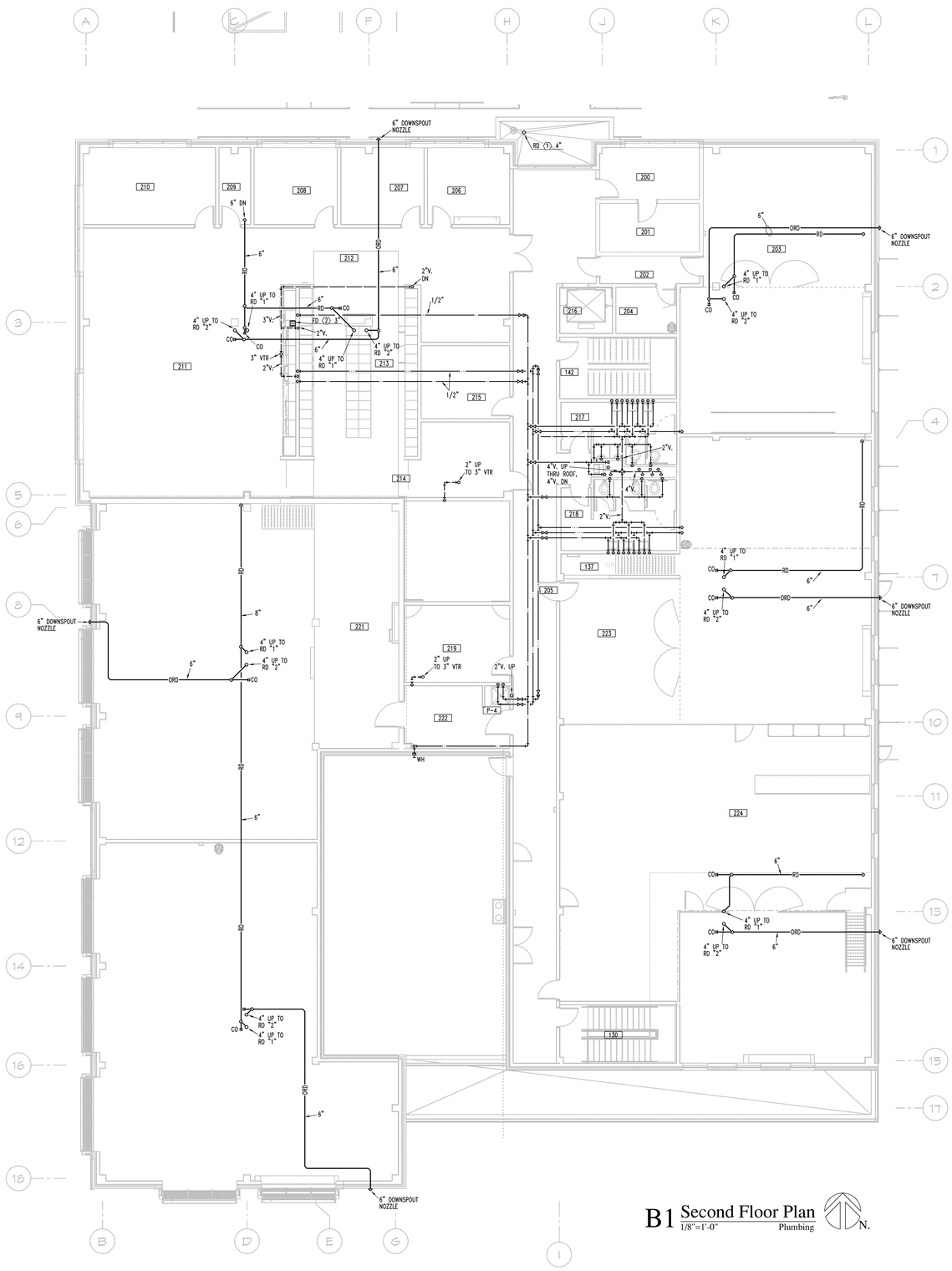

B1 Second Floor Plan
1/8"=1'-0"
Plumbing

N.

HTK ARCHITECTS PA
9200 W. 110TH ST. STE. 150
OVERLAND PARK, KANSAS 66210
P: 913.663.5373
9105 KANSAS AVE.
TOPEKA, KANSAS 66612
P: 785.266.5373
WWW.HTKARCHITECTS.NET

LS&A
Latimer Sommers & Associates, P.A.
CONSULTING ENGINEERS
3639 SW Summerfield Drive, Suite A
Topeka, Kansas 66614-3974
Telephone: (785) 233-3232
FAX: (785) 233-0647
Email: lsapa@lsapa.com
LSA PROJECT NO. 1402032

WILLIAM R. BASSETT
LICENSED
10530
PROFESSIONAL ENGINEER
4-15-15

DATE:
- 4-15-15

REVISED DATE:
- 12-18-14
- 2-9-15
- 3-10-15
-

HTK PROJECT NUMBER:
- 1410.03

Department of Administration
Office of Facilities and
Procurement Management
800 SW Jackson, Suite 700
Topeka, Kansas 66612-1216
Phone 785-296-8899
FAX 785-296-3456

STATE OF KANSAS
STATE OF KANSAS ENERGY & SERVICE CENTER
Seventh & Van Buren Street, Topeka, Kansas
BUILDING NUMBER 1730000038
DRAWN BY: CAD
CHECKED BY: WRB
REV: WRB
DATE: 4-15-15

SECOND FLOOR PLAN
- PLUMBING

A-012651

PH103

CONSTRUCTION DOCUMENTS

... PH103.dwg 04/15/15 CTC

JCSBC
2-2-2016
Att.9G.--0077

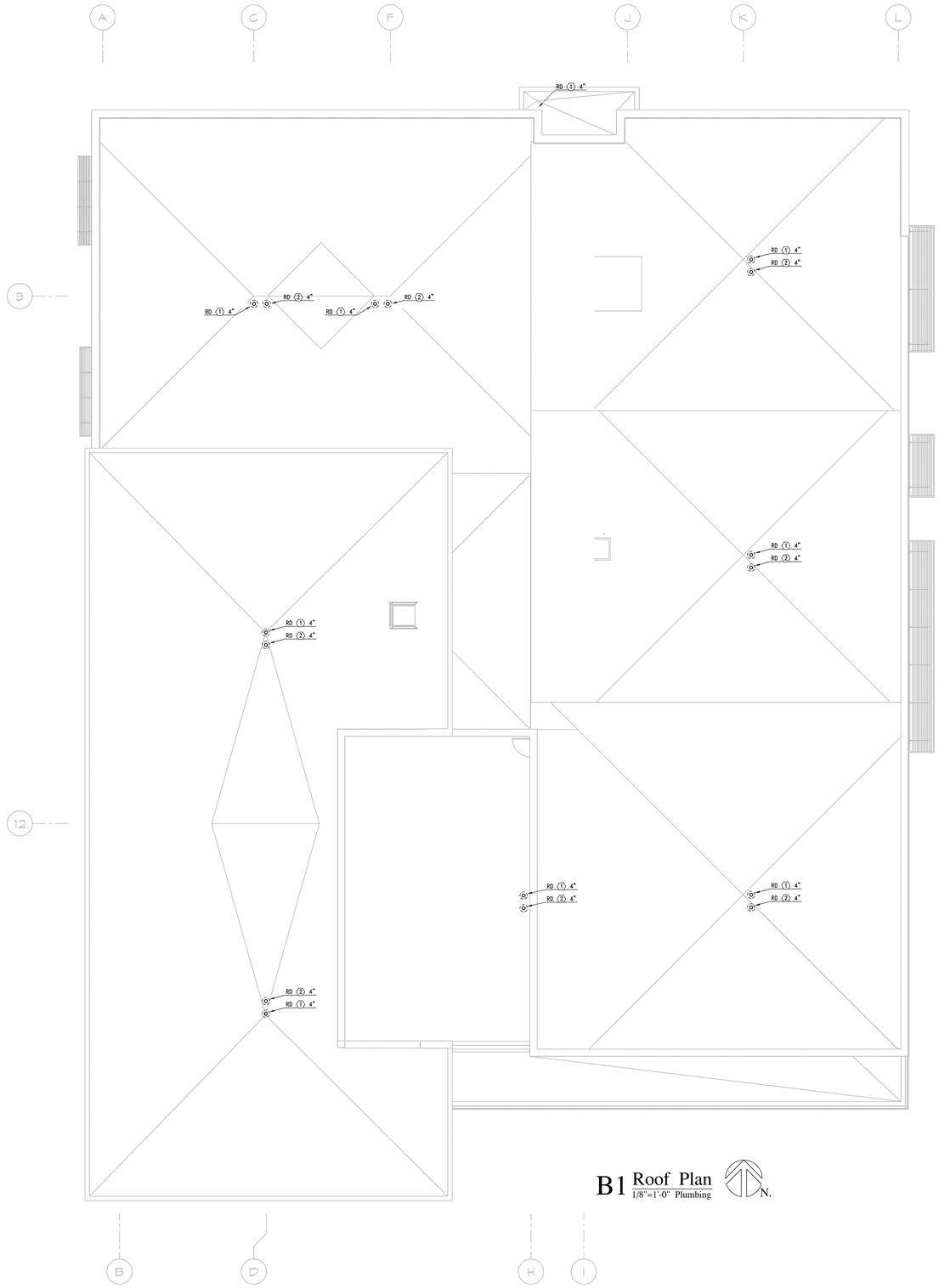

B1 Roof Plan
1/8"=1'-0" Plumbing

N.

HTK ARCHITECTS PA
900 S. KANSAS AVE. TOPEKA KANSAS 66612 P. 785-266-5373
9300 W 110TH ST. STE. 150 OVERLAND PARK KANSAS 66210 P. 913-663-5373
WWW.HTKARCHITECTS.NET

LS&A Latimer Sommers & Associates, P.A.
CONSULTING ENGINEERS
3639 SW Summerfield Drive, Suite A
Topeka, Kansas 66614-3974
Telephone: (785) 233-3232
FAX: (785) 233-0647
Email: lsapa@lsapa.com
LSA PROJECT NO. 1402032

WILLIAM R. BASSETT LICENSED 10530 KANSAS ARCHITECT
4-15-15

DATE:
- 4-15-15

REVISED DATE:
- 12-18-14
- 2-9-15
- 3-10-15

HTK PROJECT NUMBER:
- 1410.03

Department of Administration
Office of Facilities and
Procurement Management
800 SW Jackson, Suite 700
Topeka, Kansas 66612-1216
Phone 785-296-8899
FAX 785-296-3456

STATE OF KANSAS
STATE OF KANSAS ENERGY & SERVICE CENTER
Seventh & Van Buren Street, Topeka, Kansas
BUILDING NUMBER 17300-00038

DATE: 4-15-15 DRAWN BY: CAD CHECKED BY: WRB REV: WRB

ROOF PLAN - PLUMBING

A-012651

PH104

CONSTRUCTION DOCUMENTS

JCSBC
2-2-2016
Att.9G.--0078

PH104.dwg 96 04/14/15 GTC

- P201-Smith and Sonderberg 96 04/15/15 07C 04/14/15 07C 04/14/15 07C 04/06/15 EJS

PLUMBING FIXTURE SCHEDULE

MARK	FIXTURE TYPE	MANUFACTURER/ MODEL	DESCRIPTION	FITTINGS MANUFACTURER/ MODEL	FITTINGS DESCRIPTION	REMARKS
P-1	WATER CLOSET	Z5615.SB.00.00	WHITE VITREOUS CHINA, WALL HUNG TOILET, ELONGATED BOWL, 15" HIGH, SIPHON JET FLUSH, 1.28 GPF, COMPLETE WITH EFFICIENCY FLUSHOMETER VALVE.	Z5955S-EL	ELONGATED, STANDARD WHITE, OPEN FRONT TOILET SEAT LESS COVER WITH STAINLESS STEEL CHECK HINGE.	3, 5
P-1.6	ADA WATER CLOSET	Z5615.SB.00.00	WHITE VITREOUS CHINA, WALL HUNG TOILET, ELONGATED BOWL, 17" HIGH, SIPHON JET FLUSH, 1.28 GPF, COMPLETE WITH EFFICIENCY FLUSHOMETER VALVE.	Z5955S-EL	ELONGATED, STANDARD WHITE, OPEN FRONT TOILET SEAT LESS COVER WITH STAINLESS STEEL CHECK HINGE.	3, 6
P-2	URINAL	Z5755-U	1.0 GPF VITREOUS CHINA, WALL HUNG, INTEGRAL TRAP, WASHDOWN URINAL COMPLETE WITH 3/4" TOP SPUD CONNECTION, CONCEALED UNEXPOSED, ADJUSTABLE SIPHONIC FLOOR MOUNTED, HEAVY DUTY TUBULAR STEEL IMPACT, ADJUSTABLE WALL BRACKET, 2" OUTLET CONNECTION AND VANDAL RESISTANT OUTLET STRAINER, WOUNT FIXTURE RIM AT 24" A.F.F. CARRIER PLATED HANGER AND ALL OTHER REQUIRED MOUNTING HARDWARE.	Z1862S-WS1-LL	SENSOR LONG LIFE BATTERY OPERATED URINAL FLUSH VALVE. 1.0 GPF	
P-2.6	ADA URINAL	Z5755-U	1.0 GPF VITREOUS CHINA, WALL HUNG, INTEGRAL TRAP, WASHDOWN URINAL COMPLETE WITH 3/4" TOP SPUD CONNECTION, CONCEALED UNEXPOSED, ADJUSTABLE SIPHONIC FLOOR MOUNTED, HEAVY DUTY TUBULAR STEEL IMPACT, ADJUSTABLE WALL BRACKET, 2" OUTLET CONNECTION AND VANDAL RESISTANT OUTLET STRAINER, WOUNT FIXTURE RIM AT 17" A.F.F. CARRIER PLATED HANGER AND ALL OTHER REQUIRED MOUNTING HARDWARE.	Z1862S-WS1-LL	SENSOR LONG LIFE BATTERY OPERATED URINAL FLUSH VALVE. 1.0 GPF	6
P-3	LAVATORY	Z5310	20" X 18" VITREOUS CHINA WALL HUNG LAVATORY WITH REAR OVERFLOW AND SINGLE FAUCET HOLE. PROVIDE CONCEALED ARM CARRIER SYSTEM.	Z6930-XL	BATTERY POWERED, CHROME PLATED SENSOR FAUCET, 1.5 GPM, SINGLE HOLE FAUCET	1.2, 3, 4, 5
P-3.6	ADA LAVATORY	Z5310	20" X 18" VITREOUS CHINA WALL HUNG LAVATORY WITH REAR OVERFLOW AND SINGLE FAUCET HOLE. PROVIDE CONCEALED ARM CARRIER SYSTEM. OF 914 AT 34" A.F.F.	Z6930-XL	ADA COMPLIANT, BATTERY POWERED, CHROME PLATED SENSOR FAUCET, 1.5 GPM, SINGLE HOLE FAUCET	1.2, 3, 4, 5
P-4	JANITORS SINK	Z1996-36	24X36X10 MOP SERVICE BASIN, MOLDED HIGH DENSITY COMPOSITE BASIN WITH MONUMENTAL MOLDED SIDE-CHANNEL MOP GRID, PVC DRAIN BODY, STAINLESS STEEL STRAINER AND 3 GASKETED OUTLET CONNECTION.	Z1996-SF	SERVICE SINK FAUCET- CHROME PLATED SERVICE FAUCET, COMPLETE WITH VACUUM BREAKER, INTEGRAL STOPS, ADJUSTABLE WALL BRACE, PAIL HOOK, FOUR-HOSE HOT AND COLD HANDLES AND 3/4" HOSE THREAD ON SPOUT. WRIST BLADE HANDLES, 8" SPOUT REACH, WITH ESCUTCHEON PLATE. MAXIMUM FLOW RATE OF 2.2 GPM AT 60 PSI. MELTS ARE FOR 1/2" PIPE AND ARE CONCENTRIC ON AN 8" CENTERLINE.	
P-5	ADA SHOWER	Z1Q5N Z7500	TEMP-GARD PRESSURE BALANCING SHOWER VALVE WITH SINGLE BRONZE SINK STAINLESS STEEL BALANCING PISTON AND BOTTOM ACCESS INTEGRAL SERVICE STOPS, STANDARD WITH 1/2" COPPER TUBING ASSEMBLY ENCLOSED BY 18 GAGE STAINLESS STEEL #4 BRUSHED FINISH SHROUD, CHROME PLATED BRASS SHOWER HEAD WITH 2.5 GPM FLOW CONTROL AND ADJUSTABLE SPRAY PATTERN, METAL STEM HANDLE			2.5, 5.8
P-6	DOUBLE COMPARTMENT SINK	ELKAY LR-3321 IN-SINK-ERATOR PRO 77	DOUBLE COMPARTMENT SINK: SEAMLESS #18 GAUGE, TYPE 302 (18-8) NICKEL BEARING STAINLESS STEEL. 14-GA/4 SATIN FINISH FLAT UNDERMOUNT. HOLES AT 4" O.C. 8" BOWL DEPTH. 1 1/4" DRAINS COVED CORNERS. SELF RIMMING. TWO 5ØD DEC. SWIVEL INSTALLERS. AUTO REVERSING, PERMANENTLY LUBRICATED CARBIDE DISPOSAL. STAINLESS STEEL SINK FLANGE. STOPPER, GRIND CHAMBER, BEARING, CORROSION PROTECTION SHIELD. CONTINUOUS FEED 1 HORSEPOWER	AMERICAN STANDARD 2021.604	CAST BRASS KITCHEN FAUCET WITH METAL LEVER HANDLE. 1/2" CONNECTIONS. POLISHED CHROME FINISH. WITH ESCUTCHEON PLATE. PROVIDE BASKET STRAINER WITH DRAIN.	2.5, 5.8
P-7	DRINKING FOUNTAIN	HALSEY-TAYLOR HACBF36EQ	ADA COMPLIANT DUAL HEIGHT ELECTRIC WATER COOLER. BARRIER FREE WATER COOLER PROVIDING 8 GPH OF 50 DEGREE WATER AT 90 DEGREE AMBIENT. FRONT AND SIDE PUSHBARS. ADA COMPLIANT, LEAD FREE, WOLENT WITH WAL 27" KNEE CLEARANCE AND SPOUT AT NO MORE THAN 36" AFF.			
P-8	DESIGN SHOWER AND FIXMASH	WATERSAVER SSBF9095SH TWV	HANDICAP ACCESSIBLE SAFETY STATION WITH WIDE ARE EYE/FACE WASH AND STAINLESS STEEL SHOWER HEAD.			

KEYNOTES:
1 - PROVIDE CHROME PLATED BRASS TAILPIECE AND GRID DRAIN.
2 - PROVIDE CHROME PLATED BRASS P-TRAP.
3 - PROVIDE LOOSE KEY STOPS AND FLEXIBLE RISERS.
4 - PROVIDE CONCEALED ARM TYPE CARRIER WITH SQUARE TUBULAR STEEL UP-POSTS AND BLOCK TYPE BASES.
5 - INSULATE EXPOSED TAILPIECE, P-TRAP, AND WATER RISERS.
REFER TO SPECIFICATIONS FOR INSULATION METHODS.
6 - PROVIDE FLUSH VALVE HANDLE ON WIDE SIDE OF STALL.

DRAIN SCHEDULE

MARK	MANUFACTURER	MODEL NUMBER	DESCRIPTION
RD "1"	WADE	SERIES 3000-52-AE	CAST IRON ROOF DRAIN WITH BEARING POLYPROPYLENE MUSHROOM DOME, PAN, ADJUSTABLE EXTENSION, UNDER-DECK CLAMP
RD "2"	WADE	SERIES 3000-52-AE-D	SAME AS RD "A" WITH DAM FOR OVERFLOW DRAINAGE SERVICE.
FD-1	WADE	SERIES 1100 STD	CAST IRON FLOOR DRAIN WITH FLANGE, INTEGRAL REVERSIBLE CLAMPING SEEPAGE OPENINGS 1/2" PLUGGED BRONZE STRAINER WITH VANDAL PROOF PRIMER TAP AND 6" DIAMETER NICKEL SCREWS.
FD-2	WADE	SERIES 1240-1, 27	CAST IRON FLOOR DRAIN WITH PLUGGED 1/2", PRIMER TAP, INTEGRAL CLAMPING COLLAR SEEPAGE OPENINGS, ADJUSTABLE TOP, AND NICKEL BRONZE VENEER DUCTILE IRON LOOSE SET TRACTOR GRATE AND SEDIMENT BUCKET.

ELECTRIC DOMESTIC HOT WATER HEATER SCHEDULE

MARK	MANUFACTURER	STATE	CSA 82.9 SFE	KW	STORAGE	ELECTRICAL CHARACTERISTICS
DWH-1						

HTK ARCHITECTS PA
9300 W 110TH ST. STE 150
OVERLAND PARK, KANSAS 66210
P: 913.663.5373
WWW.HTKARCHITECTS.NET
4505 S KANSAS AVE.
TOPEKA KANSAS 66612
P: 785.266.5373

ISAA
Lehner Contreras & Associates, P.A.
CONSULTING ENGINEERS
3830 SW Stonebrook Drive, Suite A
Topeka, Kansas 66610-2074
Telephone: (785) 233-0202
FAX: (785) 233-0667
Email: isaapa@isaapa.com
LSA PROJECT NO. L402002



DATE:
● 4-15-15

REVISED DATE:
● 2915
● 12-18-14
● 3-10-15

HTK PROJECT NUMBER:
● 1410.03

Department of Administration
Office of Facilities and
Procurement Management
800 SW Jackson, Suite 700
Topeka, Kansas 66612-1216
Phone 785-296-8899
FAX 785-296-3456

STATE OF KANSAS
STATE OF KANSAS ENERGY & SERVICE CENTER
Seventh & Van Buren Street, Topeka, Kansas
BUILDING NUMBER 1730000038
DRAWN BY: CAD CHECKED BY: WRB REV: WRB
DATE: 4-15-15

PLUMBING SCHEDULES

A-012651

PH201

CONSTRUCTION DOCUMENTS

W:\SHC 2-2-2016 ALL\2C-00729

ARCHITECTS PA
HTK
900 S. KANSAS AVE. 3900 W 110TH ST. STE. 150
TOPEKA KANSAS 66612 OVERLAND PARK KANSAS 66210
P. 785-266-3373 P. 913-663-3373
WWW.MTKARCHITECTS.NET

LS&A
CONSULTING ENGINEERS
Mechanical • Electrical • Plumbing
LS & Associates, P.A.
Topeka, Kansas 66614-2874
Telephone: (785) 272-2252
FAX: (785) 272-3030
Email: lsa@lsatop.com
LSA PROJECT NO. 1400509

10530
REGISTERED PROFESSIONAL ENGINEER
4-15-15

DATE:
• 4.15.15

REVISED DATE:
• 2.19.14
• 2.9.15
• 3.10.15

HTK PROJECT NUMBER:
• 1410.03

Department of Administration
Office of Facilities and
Procurement Management
800 SW Jackson, Suite 700
Topeka, Kansas 66612-1216
Phone 785-296-8899
FAX 785-296-3456

STATE OF KANSAS
STATE OF KANSAS ENERGY & SERVICE CENTER
Seventh & Van Buren Street, Topeka, Kansas
BUILDING NUMBER 1730-00038

DATE: 4.15.15 DRAWN BY: CAD CHECKED BY: WRB REV.: WRB

FIRST FLOOR PLAN - HVAC

A-012651

MH101

CONSTRUCTION DOCUMENTS

JC/SHC
2-2-2016
AE/EG-60000

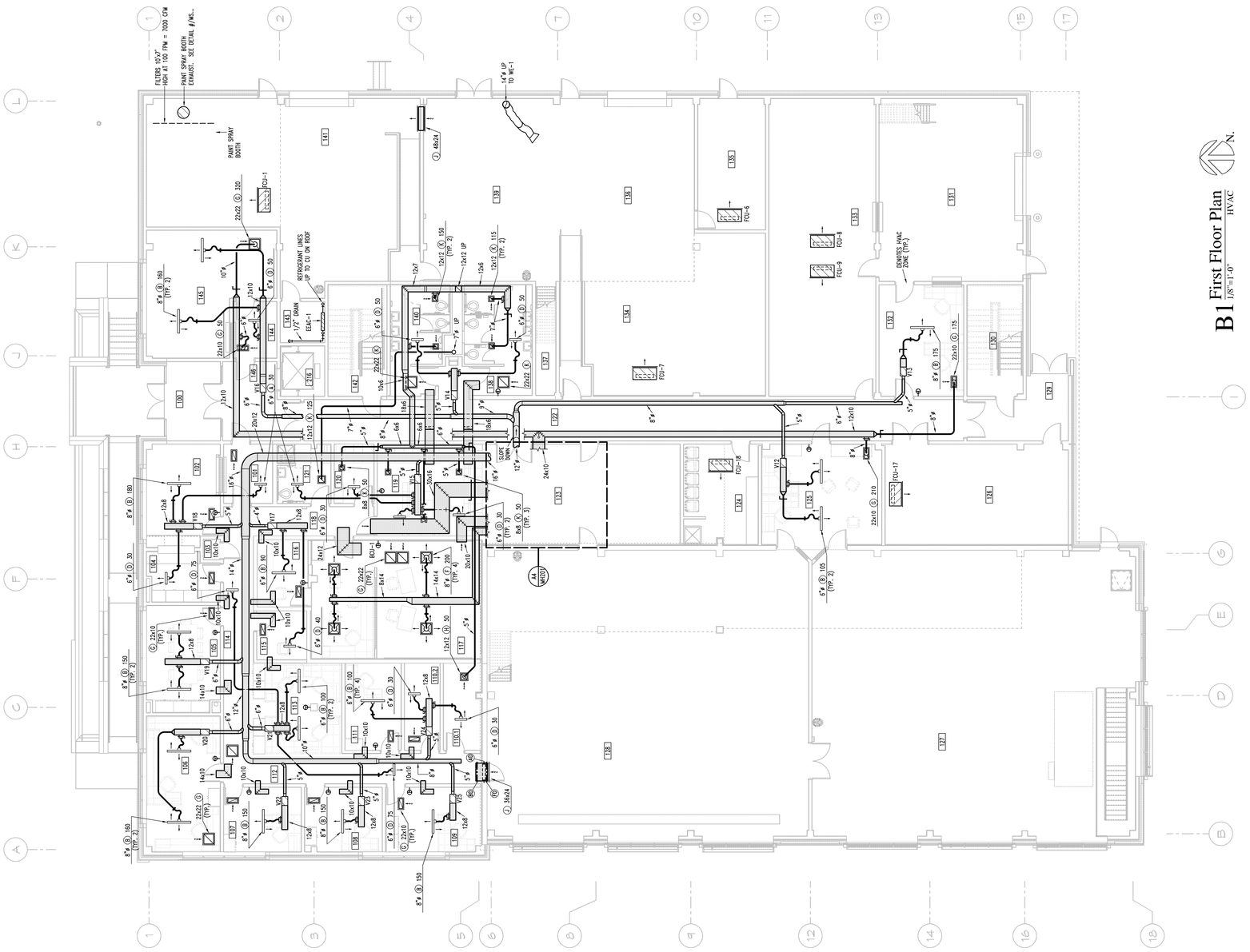
FILTERS 10'x7' HIGH AT 100 FPM = 7000 CFM
PAINT SPRAY BOOTH EXHAUST - SEE DETAIL #/AS...
PAINT SPRAY BOOTH
FCU-1
REFRIGERANT LINES UP TO CU ON ROOF
1/2" DRAIN
ELAC-1
14"ø UP TO WC-1
FCU-6
FCU-8
FCU-9
DENOTES HVAC ZONE (TYP.)
FCU-7
FCU-18
FCU-17
SLOPE DOWN
24x10
22x10
22x22
12x12
12x10
10x10
8x14
14x14
20x16
20x12
18x8
16x6
12x8
10x6
8x8
8"ø @ 180
8"ø @ 160 (TYP. 2)
8"ø @ 150 (TYP. 2)
8"ø @ 100 (TYP. 4)
6"ø @ 105 (TYP. 2)
6"ø @ 100 (TYP. 2)
6"ø @ 90
6"ø @ 80
6"ø @ 75
6"ø @ 60
6"ø @ 50 (TYP. 3)
6"ø @ 40
6"ø @ 30
6"ø @ 175
6"ø @ 150
6"ø @ 125
6"ø @ 115 (TYP. 2)
6"ø @ 50
6"ø @ 30
6"ø @ 210
6"ø @ 200 (TYP. 4)
A4 A6.00
1 48x24
1 36x24
1 22x22 (TYP.)
1 22x10 (TYP.)
1 22x12 (TYP.)
1 22x22 (TYP.)
1 22x22 (TYP.)
1 22x22

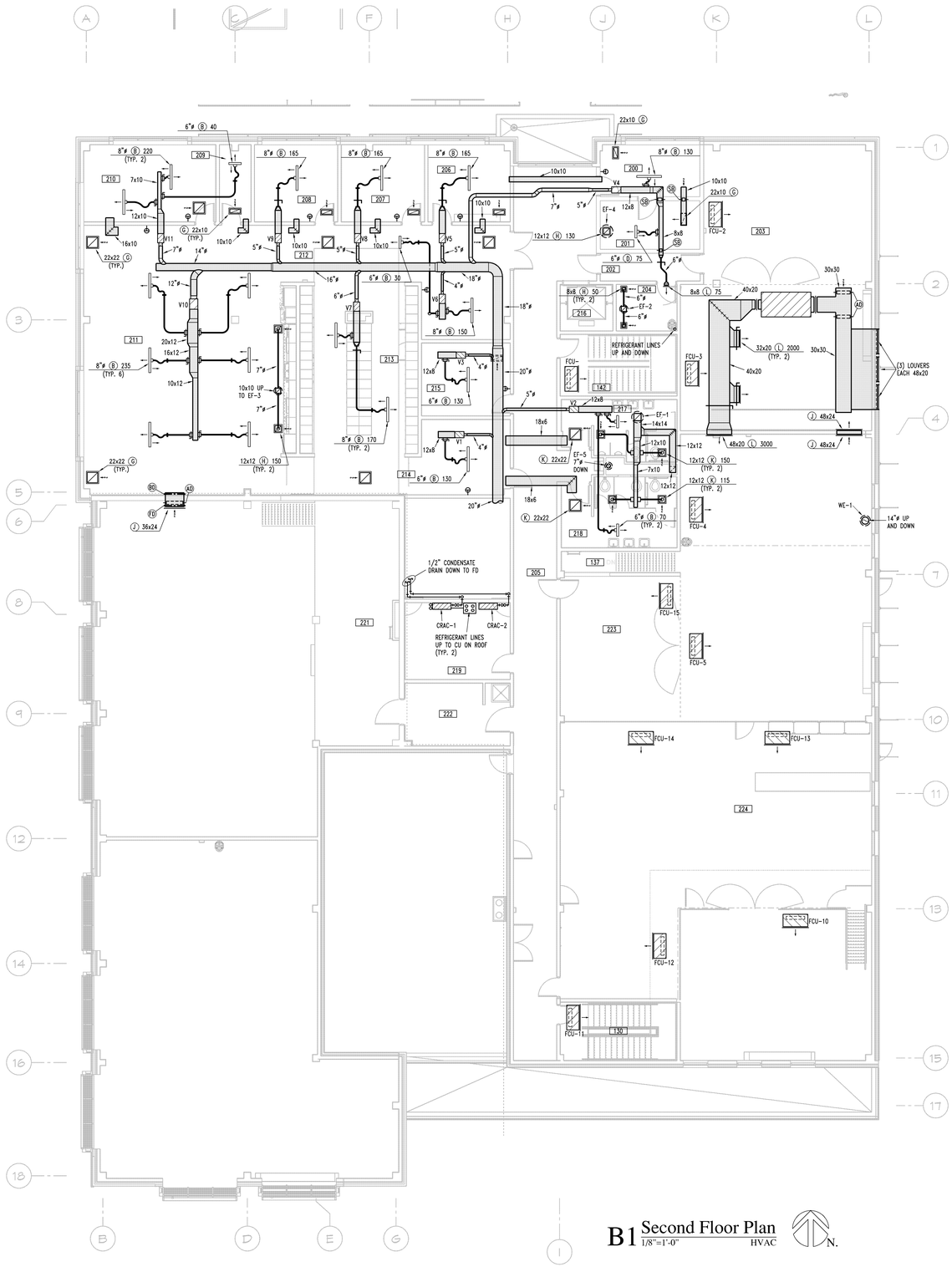

HTK ARCHITECTS PA
9300 W 110TH ST STE 150
OVERLAND PARK KANSAS 66210
P: 913 663 5373
9105 KANSAS AVE
TOPEKA KANSAS 66612
P: 785 266 5373
WWW.HTKARCHITECTS.NET

LS&A
Latimer Sommers & Associates, P.A.
CONSULTING ENGINEERS
3639 SW Summerfield Drive, Suite A
Topeka, Kansas 66614-3974
Telephone: (785) 233-3232
FAX: (785) 233-0647
Email: lsapa@lsapa.com
LSA PROJECT NO. 1402032

WILLIAM R. BASSETT
LICENSED
10530
PROFESSIONAL ENGINEER
4.15.15

DATE:
- 4-15-15

REVISED DATE:
- 12-18-14
- 2-9-15
- 3-10-15
-

HTK PROJECT NUMBER:
- 1410.03

Department of Administration
Office of Facilities and
Procurement Management
800 SW Jackson, Suite 700
Topeka, Kansas 66612-1216
Phone 785-296-8899
FAX 785-296-3456

STATE OF KANSAS
STATE OF KANSAS ENERGY & SERVICE CENTER
Seventh & Van Buren Street, Topeka, Kansas
BUILDING NUMBER 1730000038
DATE: 4-15-15
DRAWN BY: CAD
CHECKED BY: WRB
REV: WRB

SECOND FLOOR PLAN
- HVAC

A-012651

MH102

CONSTRUCTION DOCUMENTS

JCSBC
2-2-2016
Att.9G.--0081

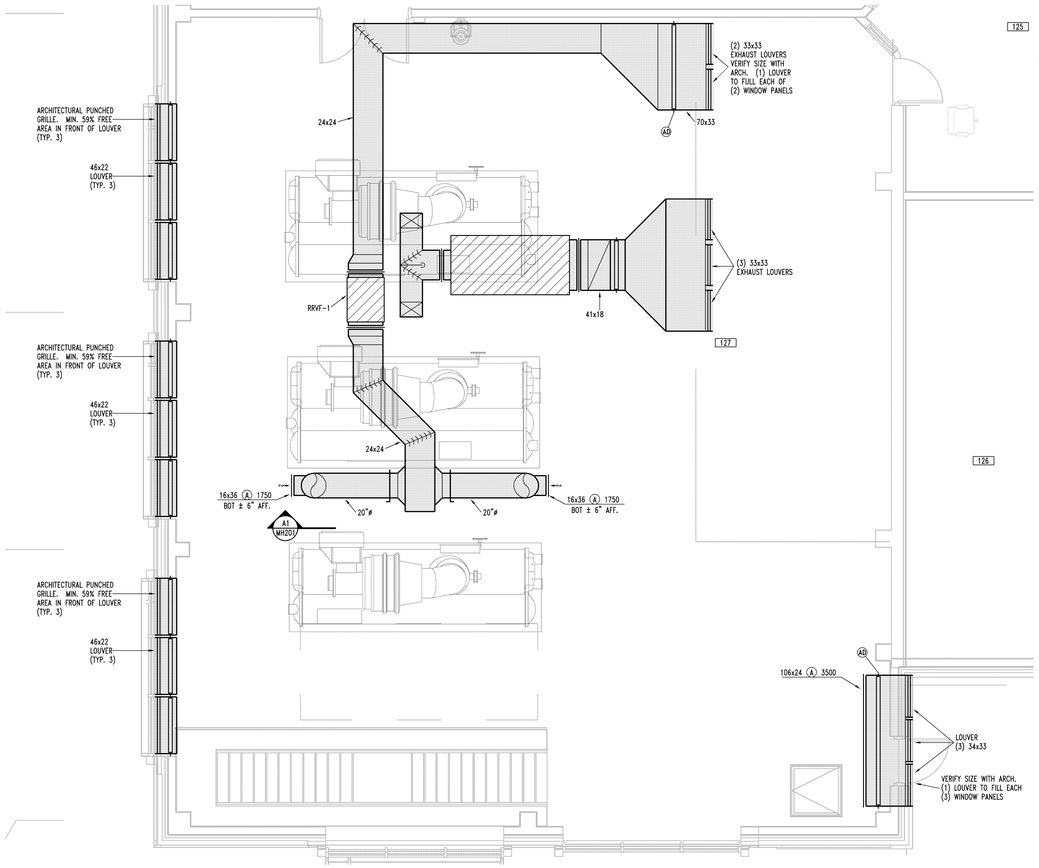

C1 Partial First Floor Plan - Chiller Room
1/4"=1'-0" HVAC N.

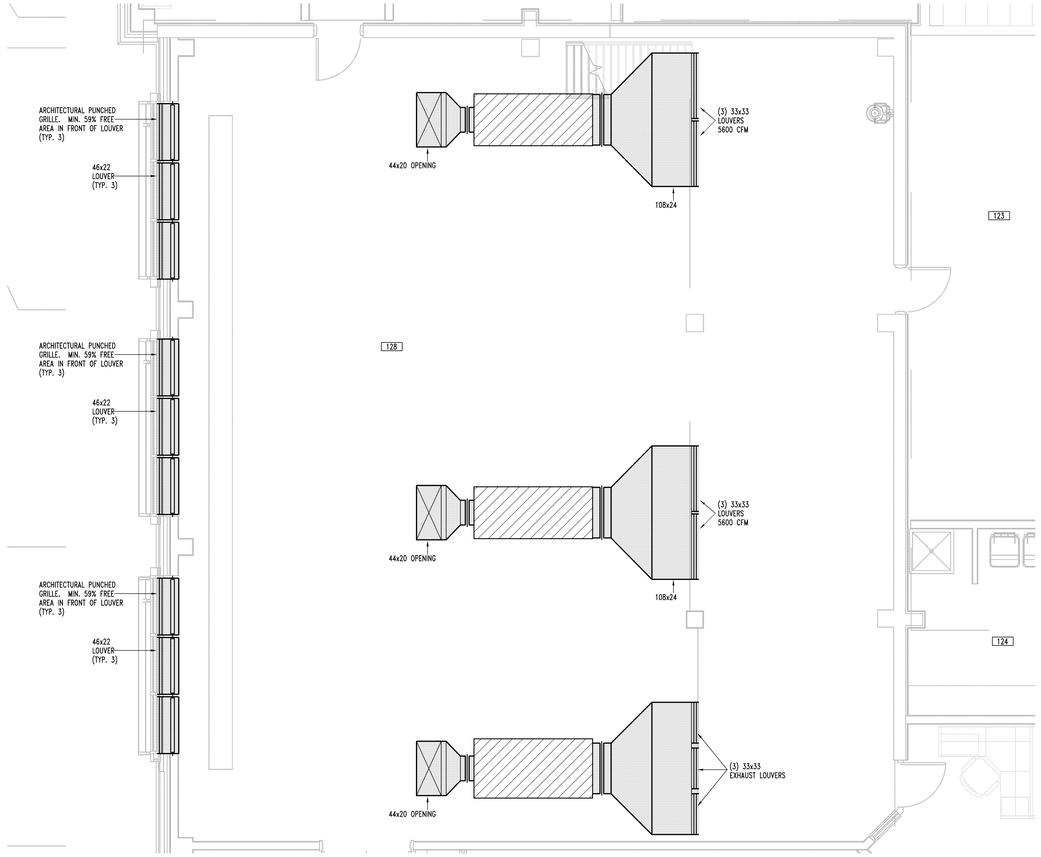

A1 Partial First Floor Plan - Boiler Room
1/4"=1'-0" HVAC N.

HTK ARCHITECTS PA
3900 W 110TH ST STE 130
OVERLAND PARK KANSAS 66210
P: 913 663 5373
9005 KANSAS AVE
TOPEKA KANSAS 66612
P: 785 266 5373
WWW.HTKARCHITECTS.NET

LS&A
Latimer Sommers & Associates, P.A.
CONSULTING ENGINEERS
3639 SW Summerfield Drive, Suite A
Topeka, Kansas 66614-3974
Telephone: (785) 233-3232
FAX: (785) 233-0647
Email: lsapa@lsapa.com
LSA PROJECT NO. 1402032

WILLIAM R. BASSETT LICENSED 10530 REGISTERED PROFESSIONAL ENGINEER
4-15-15

DATE:
- 4-15-15

REVISED DATE:
- 12-18-14
- 2-9-15
- 3-10-15

HTK PROJECT NUMBER:
- 1410.03

Department of Administration
Office of Facilities and
Procurement Management
800 SW Jackson, Suite 700
Topeka, Kansas 66612-1216
Phone 785-296-8899
FAX 785-296-3456

STATE OF KANSAS
STATE OF KANSAS ENERGY & SERVICE CENTER
Seventh & Van Buren Street, Topeka, Kansas
BUILDING NUMBER 173000038

DATE: 4-15-15 DRAWN BY: CAD CHECKED BY: WRB REV: WRB

FIRST FLOOR PLAN - HVAC

A-012651

MH103

CONSTRUCTION DOCUMENTS

JCSBC
2-2-2016
AttL9G..=0082

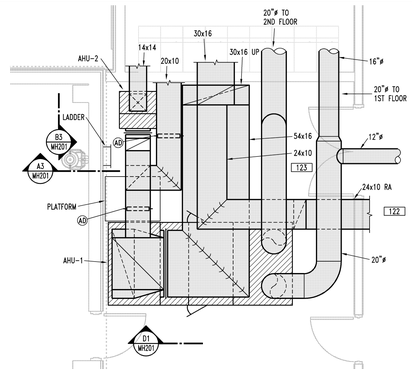

A4 Partial First Floor Plan
1/4"=1'-0"

HVAC

N.

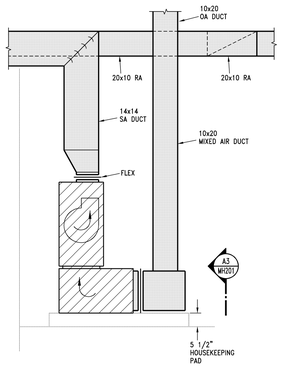

B3 AHU-2 Section
1/2"=1'-0"

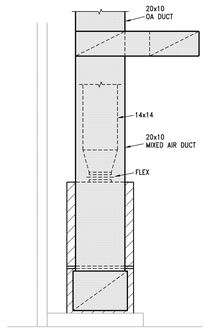

A3 AHU-2 Section
1/2"=1'-0"

D1 AHU-1 Section
1/2"=1'-0"

C1 AHU-1 Section
1/2"=1'-0"

A1 Section
1/4"=1'-0"

HTK ARCHITECTS PA
9300 W. 110TH ST. STE. 130
OVERLAND PARK, KANSAS 66210
P: 913.663.5373
9105 KANSAS AVE.
TOPEKA KANSAS 66612
P: 785.266.5373
WWW.HTKARCHITECTS.NET

LS&A
Latimer Sommers & Associates, P.A.
CONSULTING ENGINEERS
3639 SW Summerfield Drive, Suite A
Topeka, Kansas 66614-3974
Telephone: (785) 233-3232
FAX: (785) 233-0647
Email: lsapa@lsapa.com
LSA PROJECT NO. 1402032

WILLIAM R. BASSETT
LICENSED
10530
PROFESSIONAL ENGINEER
4-15-15

DATE:
- 4-15-15

REVISED DATE:
- 12-18-14
- 2-9-15
- 3-10-15

HTK PROJECT NUMBER:
- 1410.03

Department of Administration
Office of Facilities and
Procurement Management
800 SW Jackson, Suite 700
Topeka, Kansas 66612-1216
Phone 785-296-8899
FAX 785-296-3456

STATE OF KANSAS
STATE OF KANSAS ENERGY & SERVICE CENTER
Seventh & Van Buren Street, Topeka, Kansas
BUILDING NUMBER 17300-00038
DRAWN BY: CAD CHECKED BY: WRB REV: WRB
DATE: 4-15-15

HVAC SECTIONS

A-012651

MH201

CONSTRUCTION
DOCUMENTS

JCSBC
2-2-2016
Att.9G.--0083

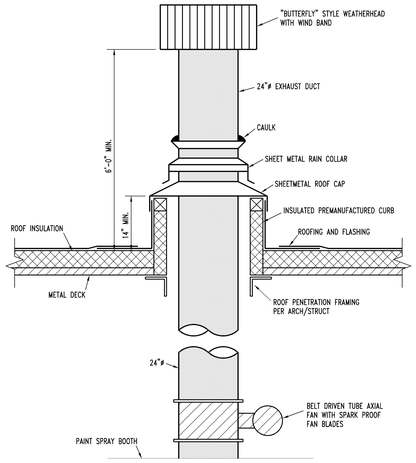

D4 Paint Spray Booth Exhaust Detail
1/2"=1'-0"

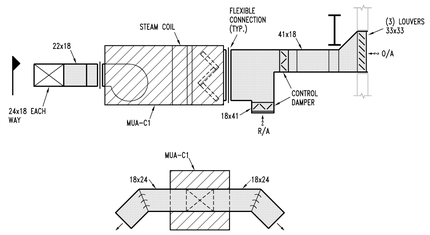

C4 MUA-C1 Detail
1/4"=1'-0"

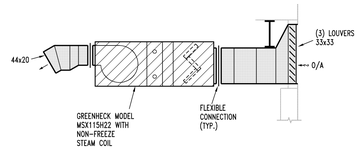

B4 MUA-B1, B2, B3 Detail
1/4"=1'-0"

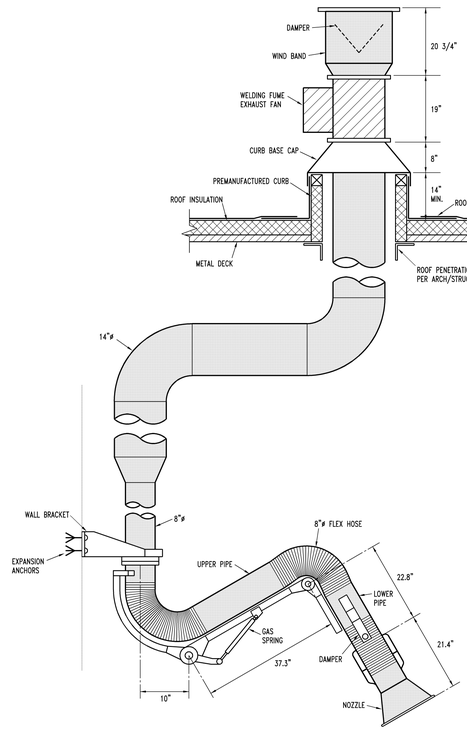

B1 Welding Exhaust System Detail
3/4"=1'-0"

HTK ARCHITECTS PA
9300 W. 110TH ST. STE. 130
OVERLAND PARK, KANSAS 66210
P: 913.663.5373
9105 KANSAS AVE.
TOPEKA, KANSAS 66612
P: 785.266.5373
WWW.HTKARCHITECTS.NET

LS&A
Latimer Sommers & Associates, P.A.
CONSULTING ENGINEERS
3639 SW Summerfield Drive, Suite A
Topeka, Kansas 66614-3974
Telephone: (785) 233-3232
FAX: (785) 233-0647
Email: lsapa@lsapa.com
LSA PROJECT NO. 1402032

WILLIAM R. BASSETT LICENSED 10530 PROFESSIONAL ENGINEER
4-15-15

DATE:
- 4-15-15

REVISED DATE:
- 12-18-14
- 2-9-15
- 3-10-15

HTK PROJECT NUMBER:
- 1410.03

Department of Administration
Office of Facilities and
Procurement Management
800 SW Jackson, Suite 700
Topeka, Kansas 66612-1216
Phone 785-296-8899
FAX 785-296-3456

STATE OF KANSAS
STATE OF KANSAS ENERGY & SERVICE CENTER
Seventh & Van Buren Street, Topeka, Kansas
BUILDING NUMBER 17300-000038
DATE: 4-15-15 DRAWN BY: CAD CHECKED BY: WRB REV: WRB

MECHANICAL DETAILS

A-012651

MH202

CONSTRUCTION DOCUMENTS

JCSBC
2-2-2016
Att.9G.--0084

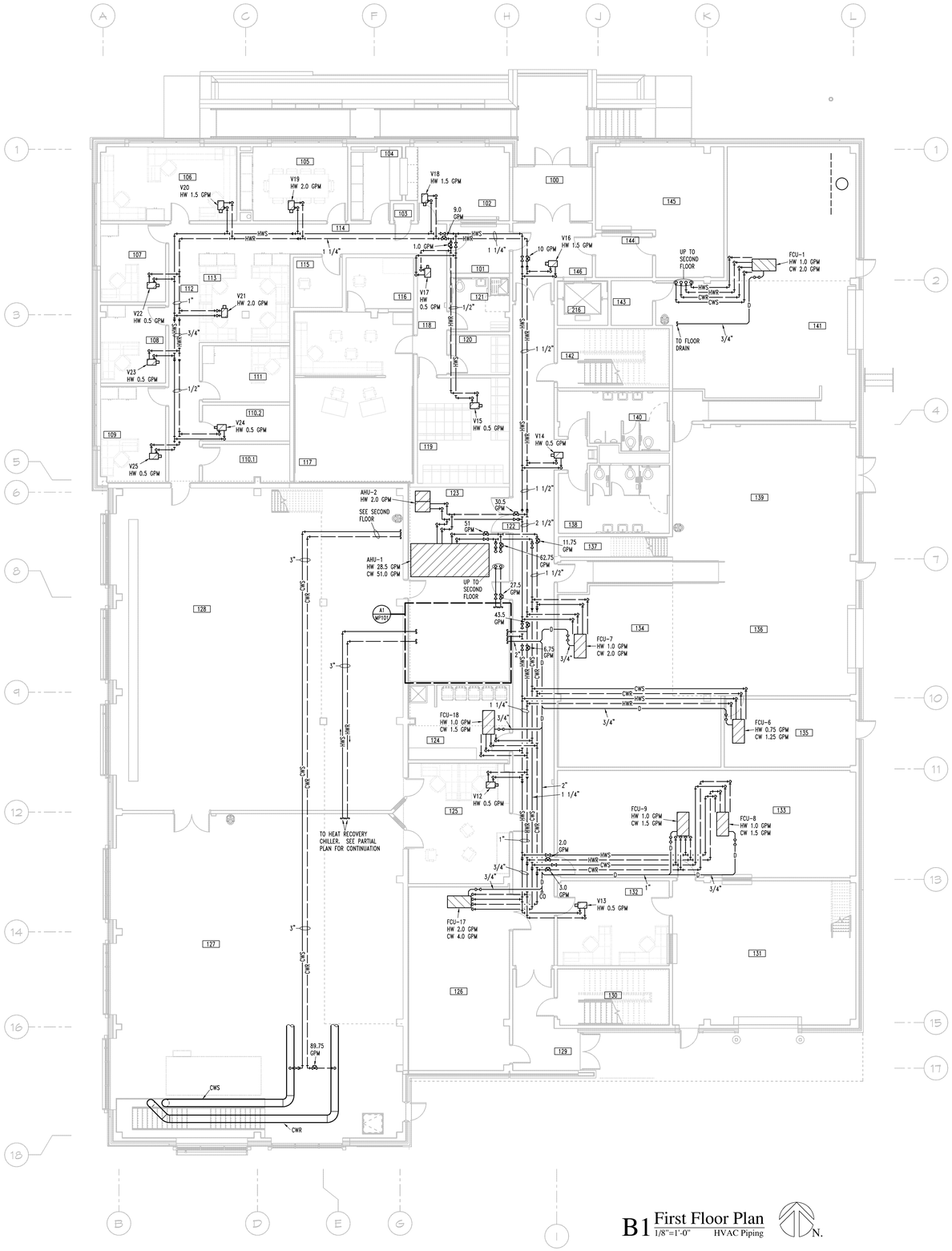

B1 First Floor Plan
1/8"=1'-0" HVAC Piping N.

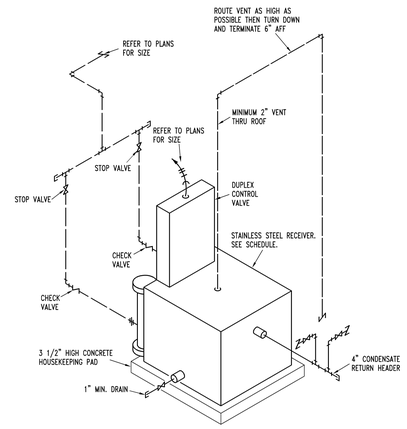

A4 Condensate Receiver/Pump
No Scale

PIPE SIZE-COIL CONNECTIONS	
COIL GPM	SIZE
0.5	1/2"
0.75	1/2"
1.0	1/2"
1.25	3/4"
1.5	3/4"
2.0	3/4"
4.0	1"
28.5	2"
51.0	2 1/2"

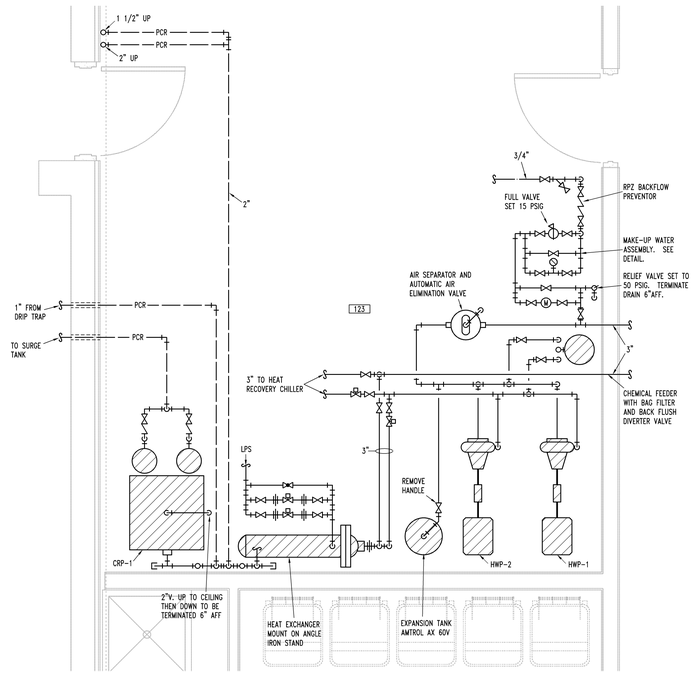

A1 Partial Plan - Room 123
1/2"=1'-0" HVAC Piping N.

HTK ARCHITECTS PA
9105 KANSAS AVE. 9200 W. 110TH ST. STE. 130
TOPEKA KANSAS 66612 OVERLAND PARK KANSAS 66210
P. 785-266-5973 P. 913-663-5373
WWW.HTKARCHITECTS.NET

LS&A Latimer Sommers & Associates, P.A.
CONSULTING ENGINEERS
3639 SW Summerfield Drive, Suite A
Topeka, Kansas 66614-3974
Telephone: (785) 233-3232
FAX: (785) 233-0547
Email: lsapa@lsapa.com
LSA PROJECT NO. 1402032

WILLIAM R. BASSETT LICENSED PROFESSIONAL ENGINEER 10530
4-15-15

DATE:
- 4-15-15

REVISED DATE:
- 12-18-14
- 2-9-15
- 3-10-15
-

HTK PROJECT NUMBER:
- 1410.03

Department of Administration
Office of Facilities and
Procurement Management
800 SW Jackson, Suite 700
Topeka, Kansas 66612-1216
Phone 785-296-8899
FAX 785-296-3496

STATE OF KANSAS
STATE OF KANSAS ENERGY & SERVICE CENTER
Seventh & Van Buren Street, Topeka, Kansas
BUILDING NUMBER 1730-00038
DATE: 4-15-15 DRAWN BY: CAD CHECKED BY: WRB REV: WRB

FIRST FLOOR PLAN - HVAC PIPING

A-012651

MP101

CONSTRUCTION DOCUMENTS

JCSBC
2-2-2016
AttQG--0085

ARCHITECTS PA
HTK
900 S. KANSAS AVE. 3900 W 110TH ST. STE. 150
TOPEKA, KANSAS 66612 OVERLAND PARK, KANSAS 66210
P. 785-266-3373 P. 913-663-3373
WWW.HTKARCHITECTS.NET

LS&A
CONSULTING ENGINEERS
Lawrence Sperry & Associates, P.A.
800 SW Jackson, Suite 1004, Topeka, Kansas 66612-1216
Topeka, Kansas 66614-3974
Telephone: (785) 233-0202
FAX: (785) 233-1536
Email: lsa@lsatks.com
LSA PROJECT NO. 1400509

10530
LICENSED PROFESSIONAL ENGINEER
WILLIAM R. GRANT
4-15-15

DATE:
• 4.15.15

REVISED DATE:
• 4.21.14
• 2.9.15
• 3.10.15

HTK PROJECT NUMBER:
• 1410.03

Department of Administration
Office of Facilities and
Procurement Management
800 SW Jackson, Suite 700
Topeka, Kansas 66612-1216
Phone 785-296-8899
FAX 785-296-3456

STATE OF KANSAS
STATE OF KANSAS ENERGY & SERVICE CENTER
Seventh & Van Buren Street, Topeka, Kansas
BUILDING NUMBER 1730-00038

DATE: 4.15.15 DRAWN BY: CAD CHECKED BY: WRB REV.: WRB

SECOND FLOOR PLAN
- HVAC PIPING

A-012651

MP102

CONSTRUCTION DOCUMENTS

JCSHC
2-2-2016
AE/EG-60886

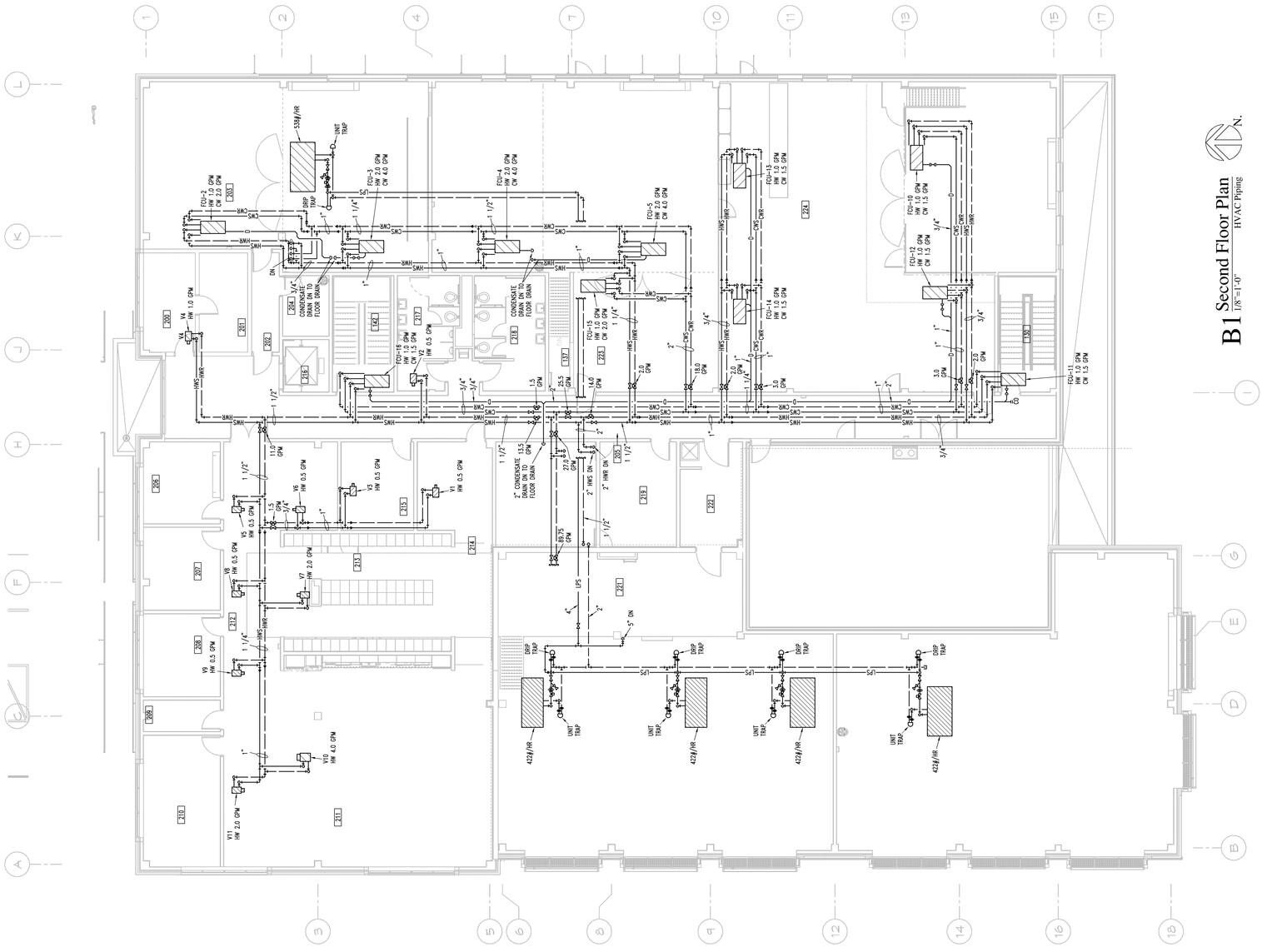

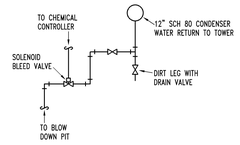

C4 Condenser Water Blow Down System
No Scale

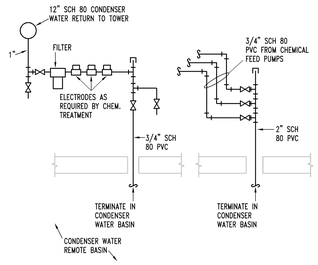

B4 Condenser Water Chemical Feed System
No Scale

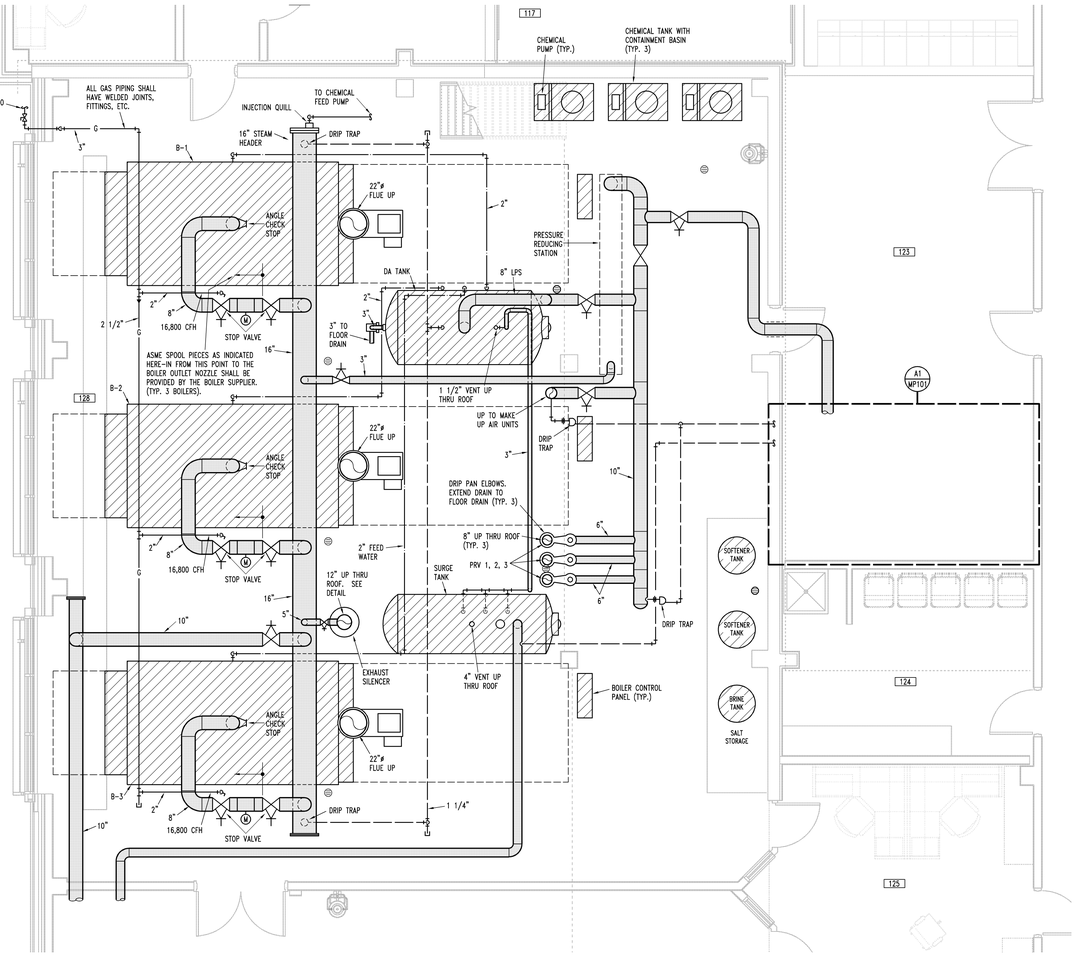

C2 Partial First Floor Plan - Boiler Room
1/4"=1'-0"
Mechanical Piping

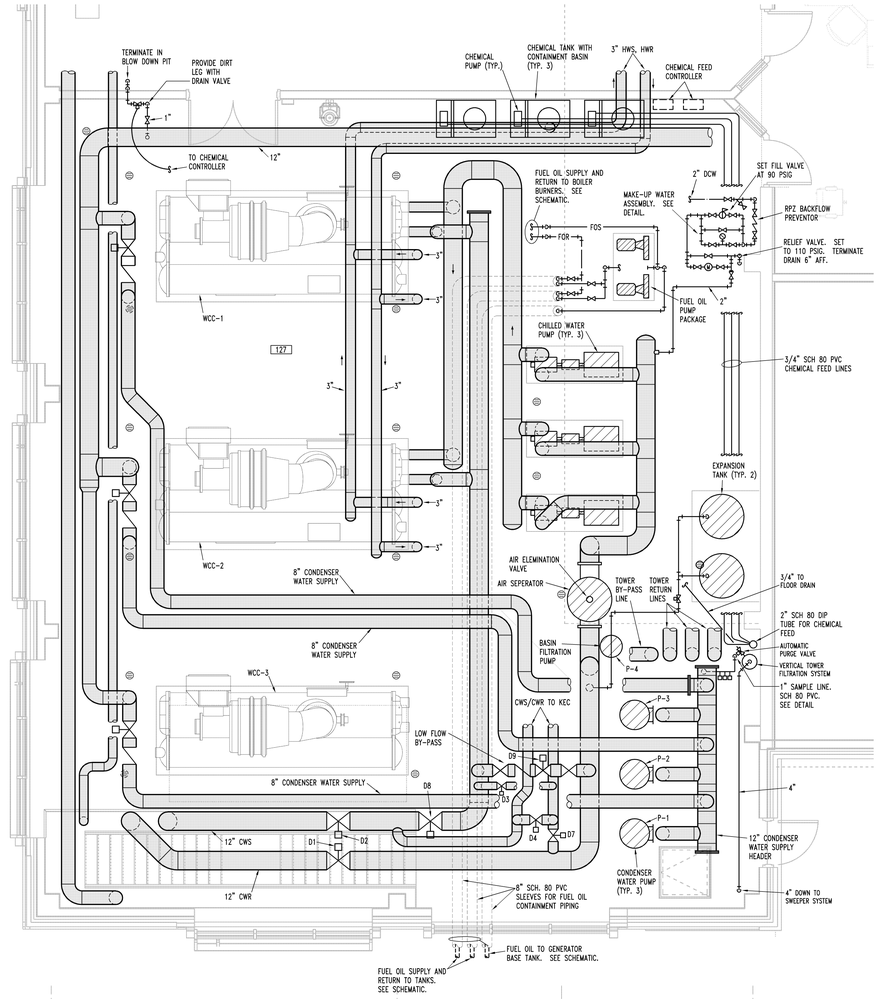

A2 Partial First Floor Plan - Chiller Room
1/4"=1'-0"
Mechanical Piping

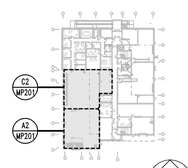

KEY PLAN
NO SCALE

HTK ARCHITECTS PA
9200 W. 110TH ST. STE 150
OVERLAND PARK, KANSAS 66210
P: 913.663.3373
9105 KANSAS AVE.
TOPEKA, KANSAS 66612
P: 785.266.5973
WWW.HTKARCHITECTS.NET

LS&A
Latimer Sommers & Associates, P.A.
CONSULTING ENGINEERS
3639 SW Summerfield Drive, Suite A
Topeka, Kansas 66614-3974
Telephone: (785) 233-3232
FAX: (785) 233-0547
Email: lsapa@lsapa.com
LSA PROJECT NO. 1402032

WILLIAM R. BASSETT LICENSED PROFESSIONAL ENGINEER 10530
4-15-15

DATE:
- 4-15-15

REVISED DATE:
- 12-18-14
- 2-9-15
- 3-10-15

HTK PROJECT NUMBER:
- 1410.03

Department of Administration
Office of Facilities and
Procurement Management
800 SW Jackson, Suite 700
Topeka, Kansas 66612-1216
Phone 785-296-8899
FAX 785-296-3456

STATE OF KANSAS
STATE OF KANSAS ENERGY & SERVICE CENTER
Seventh & Van Buren Street, Topeka, Kansas
BUILDING NUMBER 173000000038
DRAWN BY: CAD
CHECKED BY: WRB
REV: WRB
DATE: 4-15-15

PARTIAL FIRST FLOOR PLAN - MECHANICAL PIPING

A-012651

MP201

CONSTRUCTION DOCUMENTS

JCSBC
2-2-2016
Att.9G.-0087

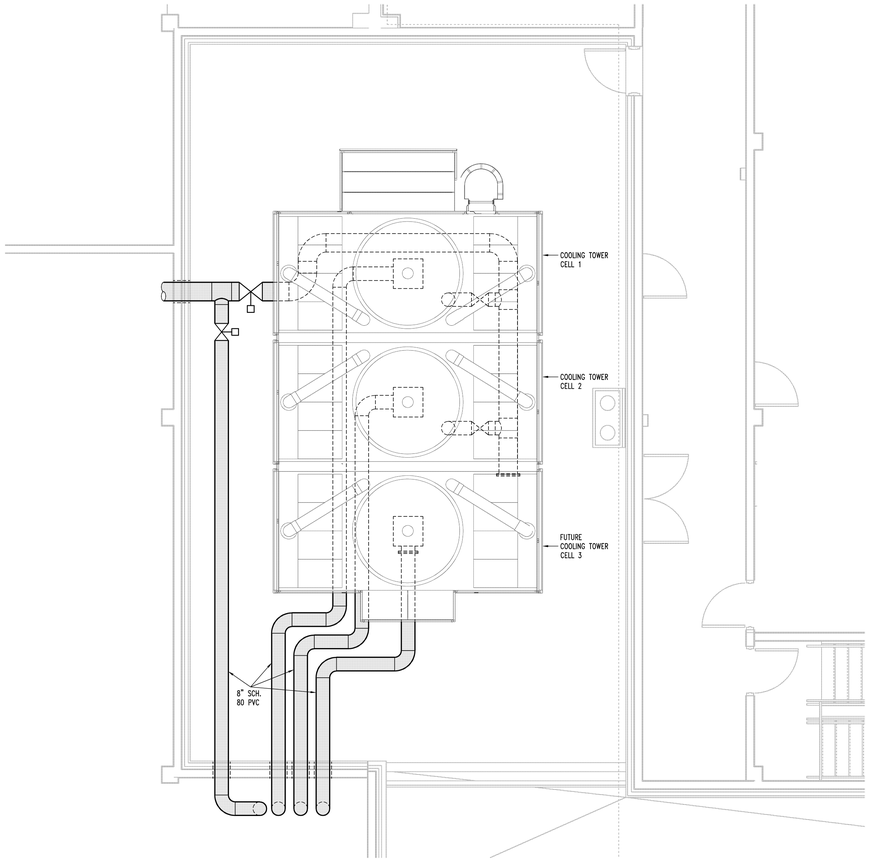

A2 PARTIAL SECOND FLOOR PLAN
1/4"=1'-0"
Mechanical Piping

N.

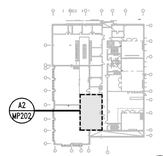

KEY PLAN
NO SCALE

N.

HTK ARCHITECTS PA
9205 KANSAS AVE. TOPEKA KANSAS 66612 P. 785.266.5973
9300 W. 110TH ST. STE. 130 OVERLAND PARK KANSAS 66210 P. 913.663.5373
WWW.HTKARCHITECTS.NET

LS&A
Latimer Sommers & Associates, P.A.
CONSULTING ENGINEERS
3639 SW Summerfield Drive, Suite A
Topeka, Kansas 66614-3974
Telephone: (785) 233-3232
FAX: (785) 233-0647
Email: lsapa@lsapa.com
LSA PROJECT NO. 1402032

WILLIAM R. BASSETT LICENSED 10530 REGISTERED ARCHITECT
4.15.15

DATE:
- 4-15-15

REVISED DATE:
- 12-18-14
- 2-9-15
- 3-10-15

HTK PROJECT NUMBER:
- 1410.03

Department of Administration
Office of Facilities and
Procurement Management
800 SW Jackson, Suite 700
Topeka, Kansas 66612-1216
Phone 785-296-8899
FAX 785-296-3456

STATE OF KANSAS
STATE OF KANSAS ENERGY & SERVICE CENTER
Seventh & Van Buren Street, Topeka, Kansas
BUILDING NUMBER 17300-00038
DRAWN BY: CAD CHECKED BY: WRB REV: WRB
DATE: 4-15-15

PARTIAL SECOND FLOOR PLAN - MECHANICAL PIPING

A-012651

MP202

CONSTRUCTION DOCUMENTS

JCSBC
2-2-2016
Att 9G - 0088

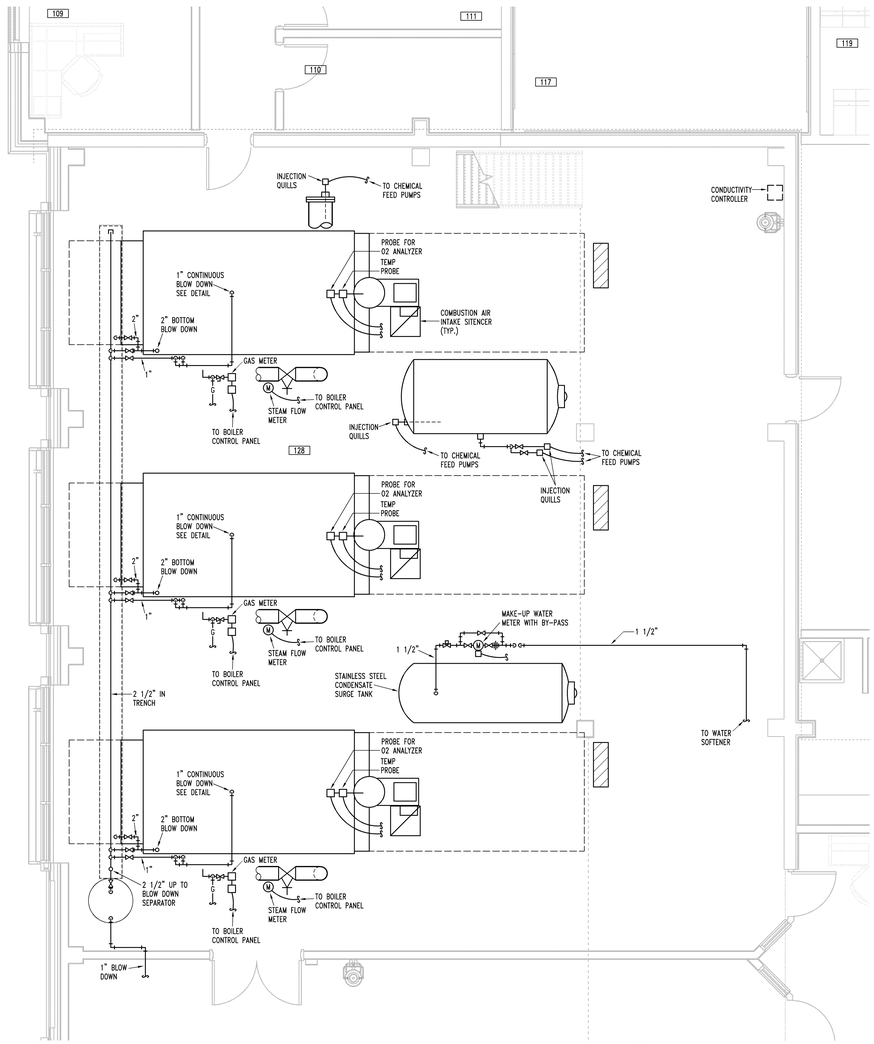

C2 Partial First Floor Plan - Boiler Room
1/4"=1'-0"
Boiler Chemical Treatment

N.

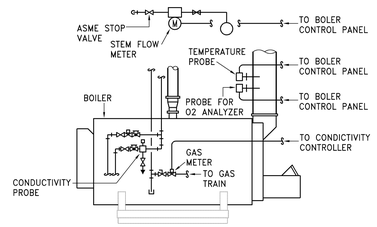

A4 Boiler Metering and Measurement
No Scale

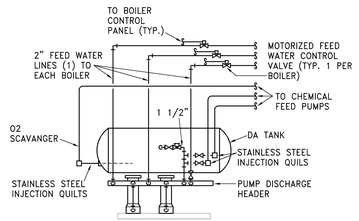

A3 Chemical Feed Connections - DA Tank
No Scale

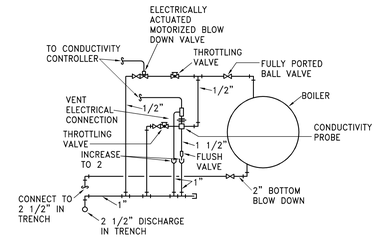

A2 Boiler Conductivity Probe Detail
No Scale

HTK ARCHITECTS PA
9200 W. 110TH ST. STE. 130
OVERLAND PARK, KANSAS 66210
P: 913.663.5373
3005 KANSAS AVE.
TOPEKA, KANSAS 66612
P: 785.266.5373
WWW.HTKARCHITECTS.NET

LS&A
Latimer Sommers & Associates, P.A.
CONSULTING ENGINEERS
3639 SW Summerfield Drive, Suite A
Topeka, Kansas 66614-3974
Telephone: (785) 233-3232
FAX: (785) 233-0647
Email: lsapa@lsapa.com
LSA PROJECT NO. 1402032

WILLIAM R. GASSETTE
LICENSED
10530
PROFESSIONAL ENGINEER
4-15-15

DATE:
- 4-15-15

REVISED DATE:
- 12-18-14
- 2-9-15
- 3-10-15

HTK PROJECT NUMBER:
- 1410.03

Department of Administration
Office of Facilities and
Procurement Management
800 SW Jackson, Suite 700
Topeka, Kansas 66612-1216
Phone 785-296-8899
FAX 785-296-3456

STATE OF KANSAS
STATE OF KANSAS ENERGY & SERVICE CENTER
Seventh & Van Buren Street, Topeka, Kansas
BUILDING NUMBER 17300-00038
DATE: 4-15-15 DRAWN BY: CAD CHECKED BY: WRB REV: WRB

PARTIAL FIRST FLOOR PLAN - BOILER CHEMICAL TREATMENT

A-012651

MP301

CONSTRUCTION DOCUMENTS

JCSBC
2-2-2016
Att.9G.--0089

...MP301.dwg 48 04/14/15 CTC

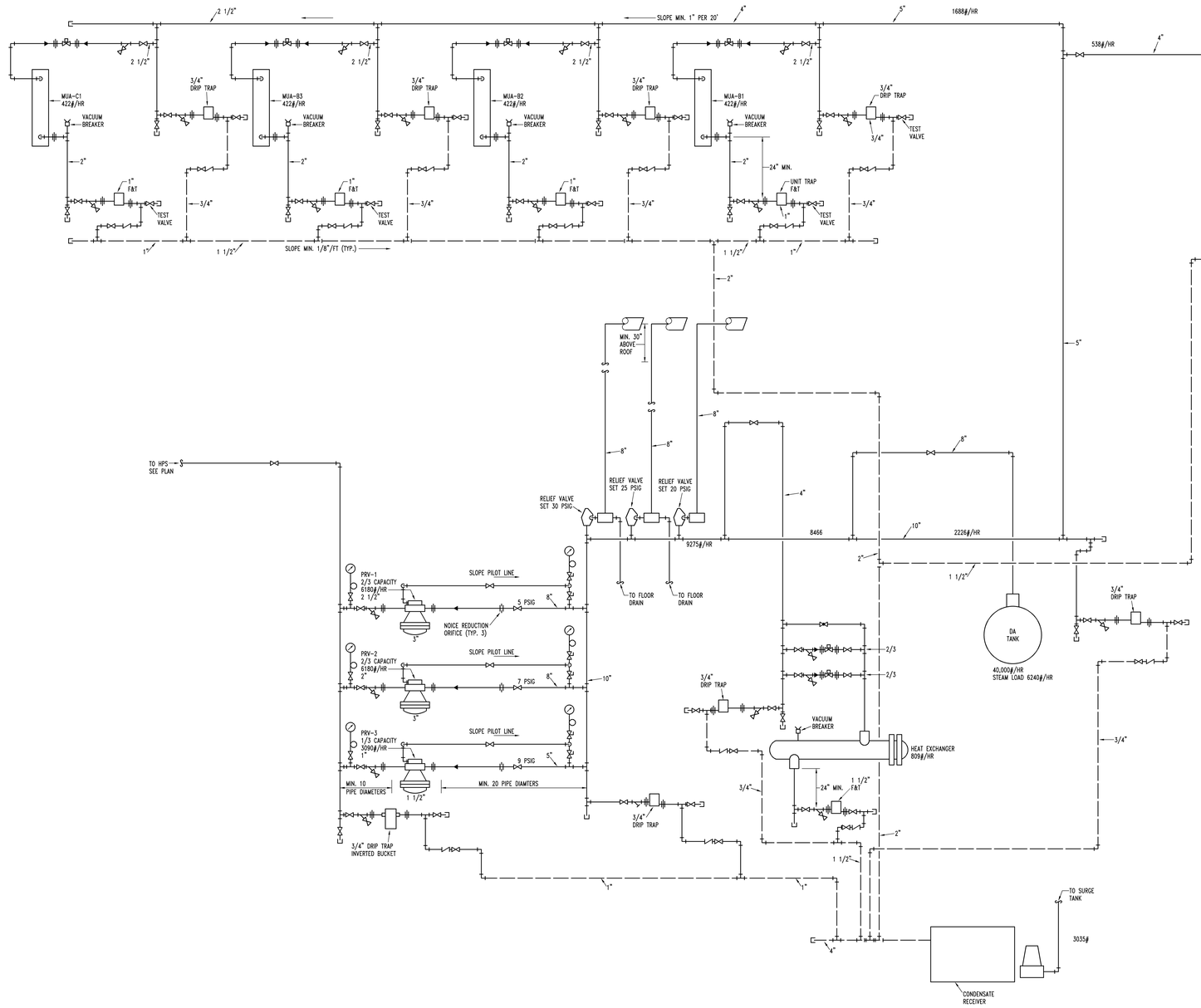

B1 Mechanical Piping Schematic
No Scale

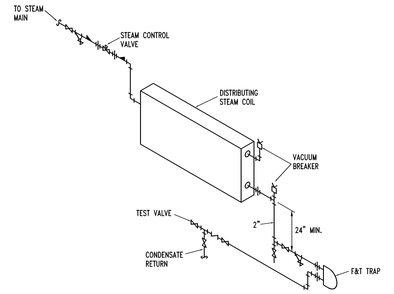

A3 Distributing Steam Coil Detail
No Scale

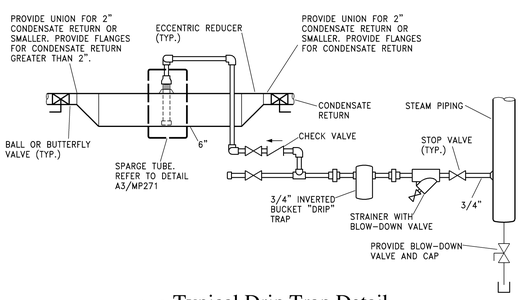

A2 Typical Drip Trap Detail
No Scale (locate at all change in vertical elevation and end of main)

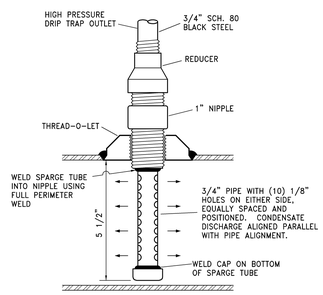

A1 Sparge Tube Detail
No Scale

HTK ARCHITECTS PA
9200 W. 110TH ST. STE. 150
OVERLAND PARK, KANSAS 66210
P: 913.663.5373
3005 KANSAS AVE.
TOPEKA, KANSAS 66612
P: 785.266.5373
WWW.HTKARCHITECTS.NET

LS&A
Latimer Sommers & Associates, P.A.
CONSULTING ENGINEERS
3639 SW Summerfield Drive, Suite A
Topeka, Kansas 66614-3974
Telephone: (785) 233-3232
FAX: (785) 233-0547
Email: lsapa@lsapa.com
LSA PROJECT NO. 1402032

WILLIAM R. BASSETT LICENSED 10530 PROFESSIONAL ENGINEER
4-15-15

DATE:
- 4-15-15

REVISED DATE:
- 12-18-14
- 2-9-15
- 3-10-15

HTK PROJECT NUMBER:
- 1410.03

Department of Administration
Office of Facilities and
Procurement Management
800 SW Jackson, Suite 700
Topeka, Kansas 66612-1216
Phone 785-296-8899
FAX 785-296-3456

STATE OF KANSAS
STATE OF KANSAS ENERGY & SERVICE CENTER
Seventh & Van Buren Street, Topeka, Kansas
BUILDING NUMBER 17300-00038
DRAWN BY: CAD
CHECKED BY: WRB
REV: WRB
DATE: 4-15-15

MECHANICAL PIPING SCHEMATIC

A-012651

MP302

CONSTRUCTION DOCUMENTS

JCSBC
2-2-2016
AttXG--0090

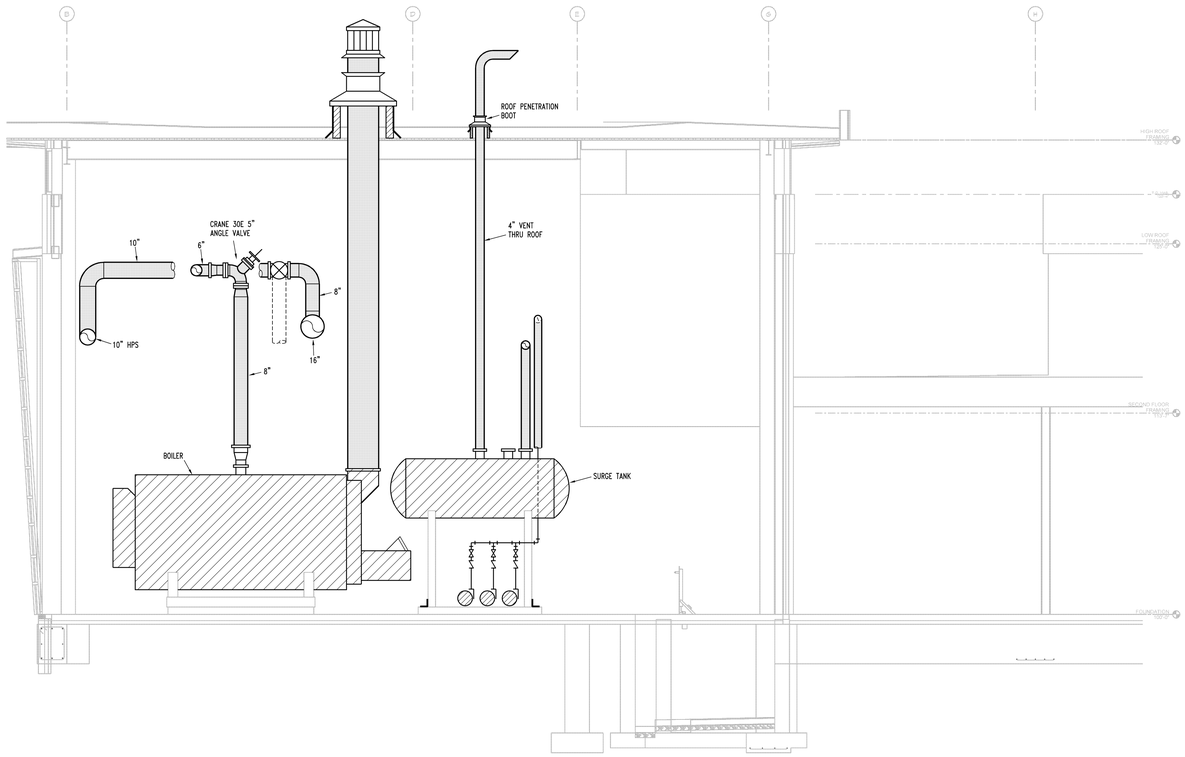

B3 Building Section - Boiler Room
1/4"=1'-0" Mechanical Piping

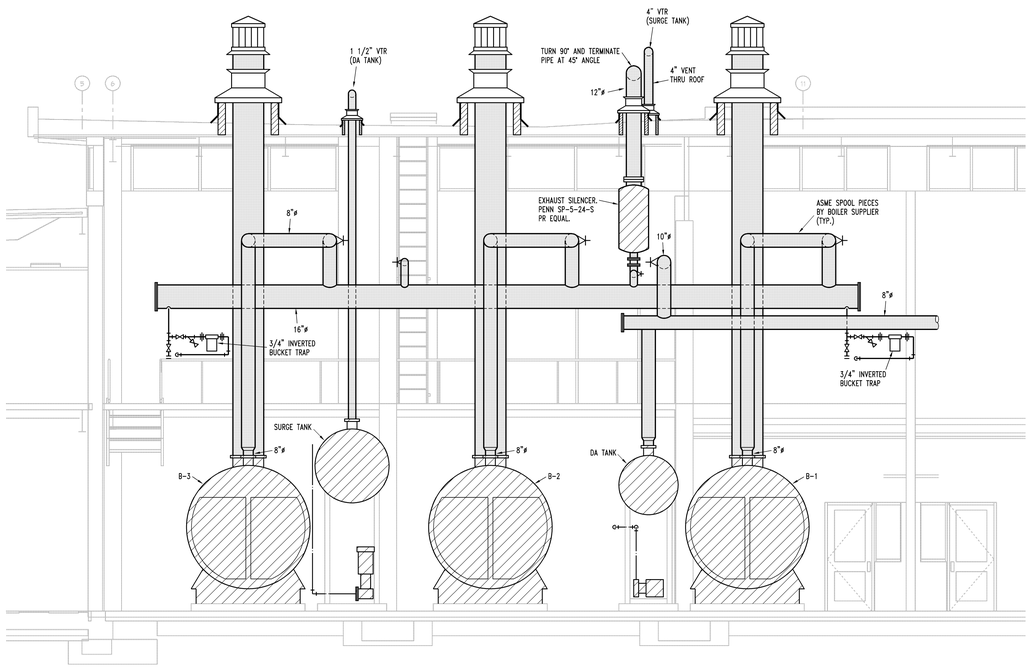

B1 Building Section - Boiler Room
1/4"=1'-0" Mechanical Piping

HTK ARCHITECTS PA
9300 W. 110TH ST. STE. 130
OVERLAND PARK, KANSAS 66210
P: 913.663.5373
9105 KANSAS AVE.
TOPEKA KANSAS 66612
P: 785.266.5973
WWW.HTKARCHITECTS.NET

LS&A
Latimer Sommers & Associates, P.A.
CONSULTING ENGINEERS
3639 SW Summerfield Drive, Suite A
Topeka, Kansas 66614-3974
Telephone: (785) 233-3232
FAX: (785) 233-0647
Email: lsapa@lsapa.com
LSA PROJECT NO. 1402032

WILLIAM R. BASSETTE LICENSED 10530 REGISTERED ARCHITECT
4-15-15

DATE:
- 4-15-15

REVISED DATE:
- 12-18-14
- 2-9-15
- 3-10-15

HTK PROJECT NUMBER:
- 1410.03

Department of Administration
Office of Facilities and
Procurement Management
800 SW Jackson, Suite 700
Topeka, Kansas 66612-1216
Phone 785-296-8899
FAX 785-296-3456

STATE OF KANSAS
STATE OF KANSAS ENERGY & SERVICE CENTER
Seventh & Van Buren Street, Topeka, Kansas
BUILDING NUMBER 1730000038
DRAWN BY: CAD CHECKED BY: WRB REV: WRB
DATE: 4-15-15

SECTIONS - MECHANICAL PIPING

A-012651

MP401

CONSTRUCTION DOCUMENTS

JCSBC
2-2-2016
Att.9G.--0091

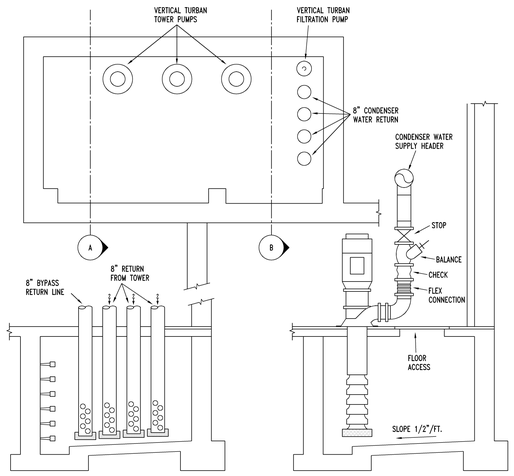

D3 1/4"=1'-0" Mechanical Piping

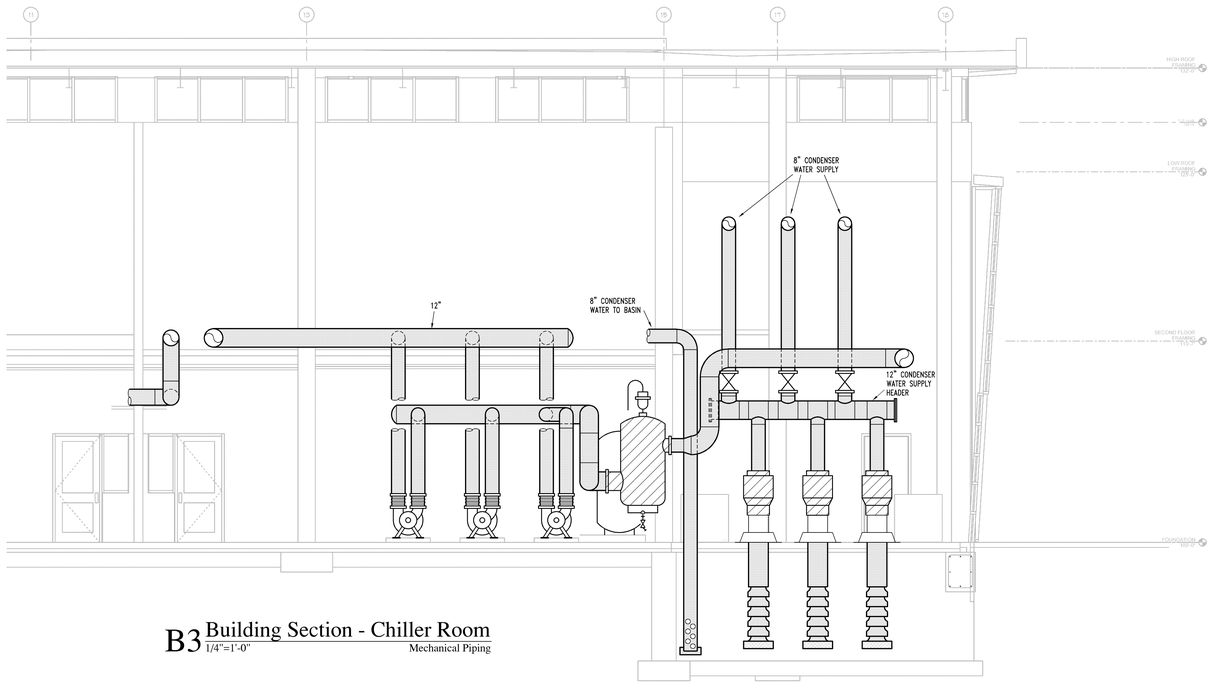

B3 Building Section - Chiller Room
1/4"=1'-0" Mechanical Piping

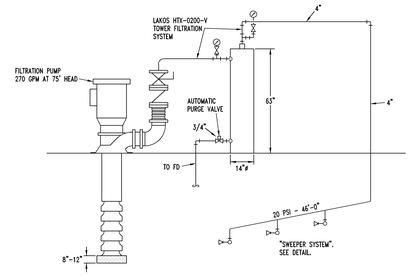

D2 Tower Basin - Filtration System
No Scale

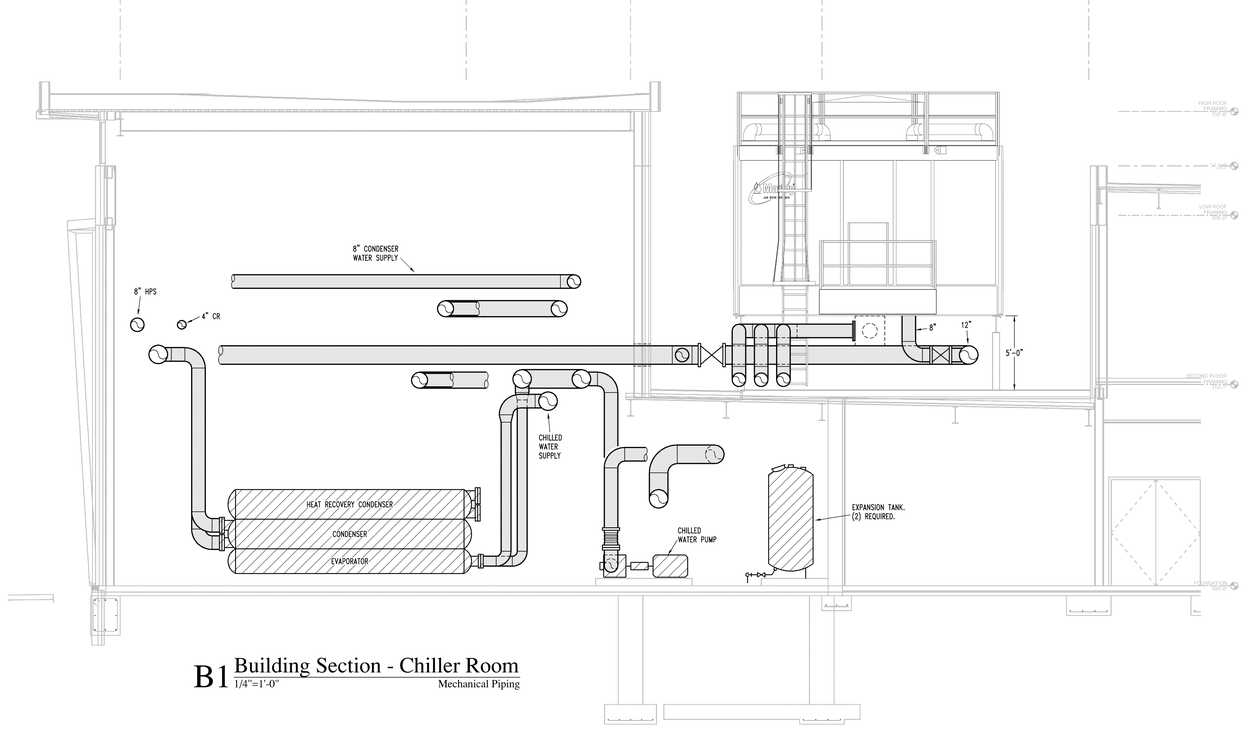

B1 Building Section - Chiller Room
1/4"=1'-0" Mechanical Piping

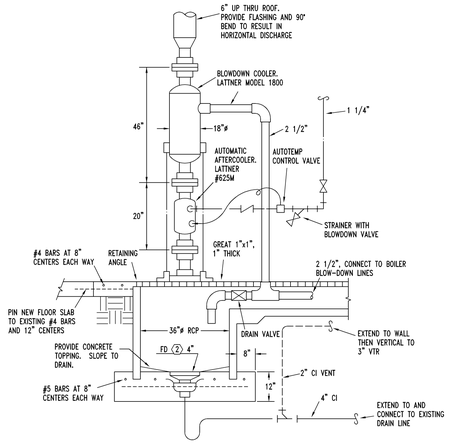

D1 Blowdown Cooler Detail
1/4"=1'-0"

HTK ARCHITECTS PA
9300 W. 110TH ST. STE. 130
OVERLAND PARK, KANSAS 66210
P: 913.663.5373
3905 KANSAS AVE.
TOPEKA, KANSAS 66612
P: 785.266.5373
WWW.HTKARCHITECTS.NET

LS&A
Latimer Sommers & Associates, P.A.
CONSULTING ENGINEERS
3639 SW Summerfield Drive, Suite A
Topeka, Kansas 66614-3974
Telephone: (785) 233-3232
FAX: (785) 233-0647
Email: lsapa@lsapa.com
LSA PROJECT NO. 1402032

WILLIAM R. BASSETT LICENSED 10530 PROFESSIONAL ENGINEER
4-15-15

DATE:
- 4-15-15

REVISED DATE:
- 12-18-14
- 2-9-15
- 3-10-15

HTK PROJECT NUMBER:
- 1410.03

Department of Administration
Office of Facilities and Procurement Management
800 SW Jackson, Suite 700
Topeka, Kansas 66612-1216
Phone 785-296-8899
FAX 785-296-3456

STATE OF KANSAS
STATE OF KANSAS ENERGY & SERVICE CENTER
Seventh & Van Buren Street, Topeka, Kansas
BUILDING NUMBER 1730000038
DRAWN BY: CAD CHECKED BY: WRB REV: WRB
DATE: 4-15-15

SECTIONS - MECHANICAL PIPING

A-012651

MP402

CONSTRUCTION DOCUMENTS

JCSBC
2-2-2016
Att.9G--0092

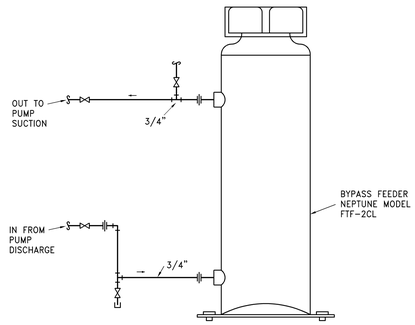

D4 Chemical Bypass (Pot) Feeder Connection Detail
No Scale

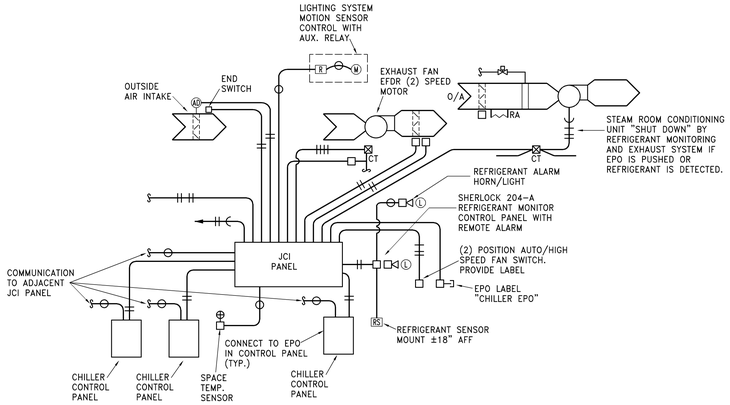

C4 Refrigerant Monitoring and Exhaust System Control Diagram
No Scale

NOTES:

ADDENDUM #2, ARTICLE 2.3.J
PLAN SHEET MP101, 102, MP171 AND MP172: AS INDICTED ON THE PLAN SHEETS, THE PIPING CONNECTIONS TO CHILLERS D1, D2, D3, D4 AND D5 (EVAPORATOR, CONDENSER AND HEAT RECOVERY, AS NECESSARY) SHALL BE 8".

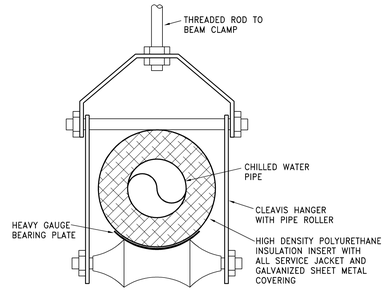

A4 Suspended Pipe Support Detail
No Scale

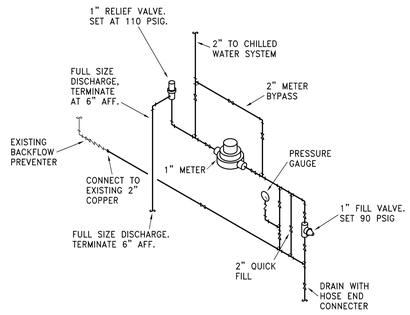

D3 Fill Valve Detail
No Scale

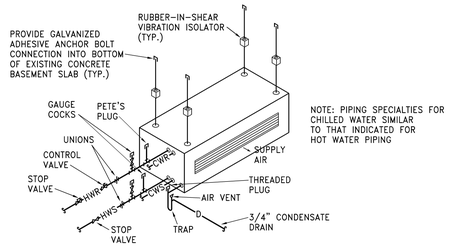

C3 Fan Coil Unit Connection Detail
No Scale

NOTES:

1. DO NOT USE TRIPLE DUTY VALVE IN LIEU OF STOP, CHECK AND BALANCE VALVE ON PUMP DISCHARGE.

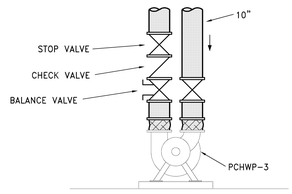

B3 Section
No Scale

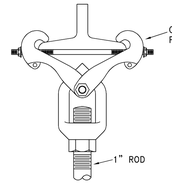

A3 Beam Clamp Connection Detail
No Scale

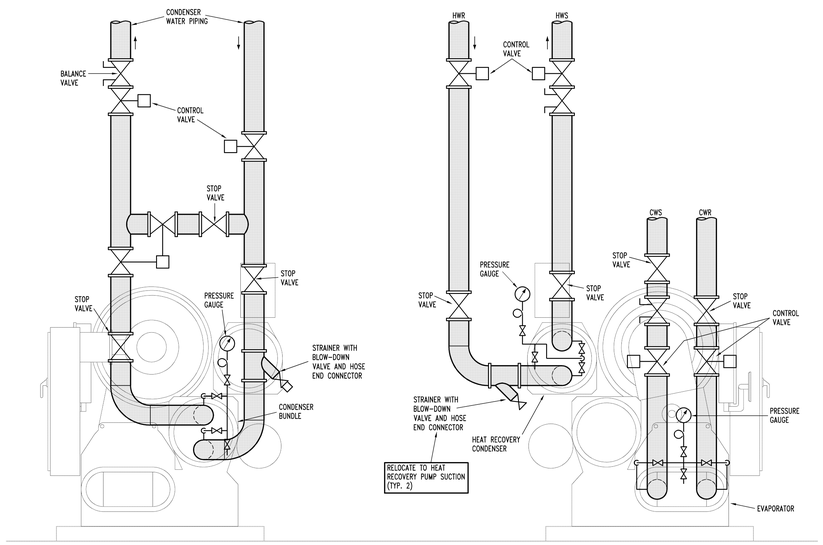

C1 Typical Chiller Piping Connections Elevation
No Scale

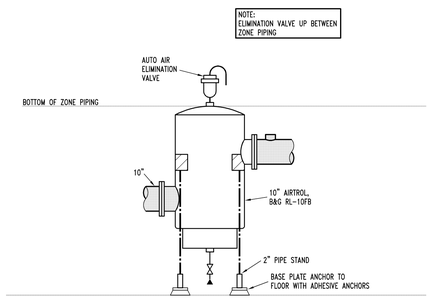

B1 Chilled Water Air Seperator
No Scale

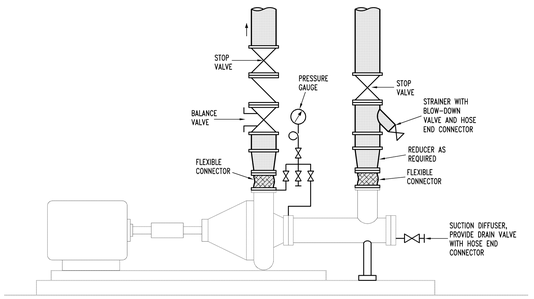

Typical End Suction Pump
A1 Piping Connections Elevation
No Scale

HTK ARCHITECTS PA
9200 W. 110TH ST. STE. 150
OVERLAND PARK, KANSAS 66210
P: 913.663.5373
9105 KANSAS AVE.
TOPEKA KANSAS 66612
P: 785.266.5373
WWW.HTKARCHITECTS.NET

LS&A
Latimer Sommers & Associates, P.A.
CONSULTING ENGINEERS
3639 SW Summerfield Drive, Suite A
Topeka, Kansas 66614-3974
Telephone: (785) 233-3232
FAX: (785) 233-0647
Email: lsapa@lsapa.com
LSA PROJECT NO. 1402032

WILLIAM R. GASSETTE LICENSED 10530 PROFESSIONAL ENGINEER
4.15.15

DATE:
- 4-15-15

REVISED DATE:
- 12-18-14
- 2-9-15
- 3-10-15
-

HTK PROJECT NUMBER:
- 1410.03

Department of Administration
Office of Facilities and
Procurement Management
800 SW Jackson, Suite 700
Topeka, Kansas 66612-1216
Phone 785-296-8899
FAX 785-296-3456

STATE OF KANSAS
STATE OF KANSAS ENERGY & SERVICE CENTER
Seventh & Van Buren Street, Topeka, Kansas
BUILDING NUMBER 17300-000038
DRAWN BY: CAD CHECKED BY: WRB REV: WRB
DATE: 4-15-15

SECTIONS - MECHANICAL PIPING

A-012651

MP403

CONSTRUCTION DOCUMENTS

JCSBC
2-2-2016
Att.9G--0093

...MP403_Mechanical Sections.dwg 1 04/15/15 DTC DTC 3:0 DTC 3:0 DTC 3:0 DTC 3:0 DTC SAVE AS FROM.dwg 96 02/24/15 DTC Ltd.dwg 96 02/24/15 DTC Ltd.dwg 96 02/24/15 DTC 3:0 DTC 3:0

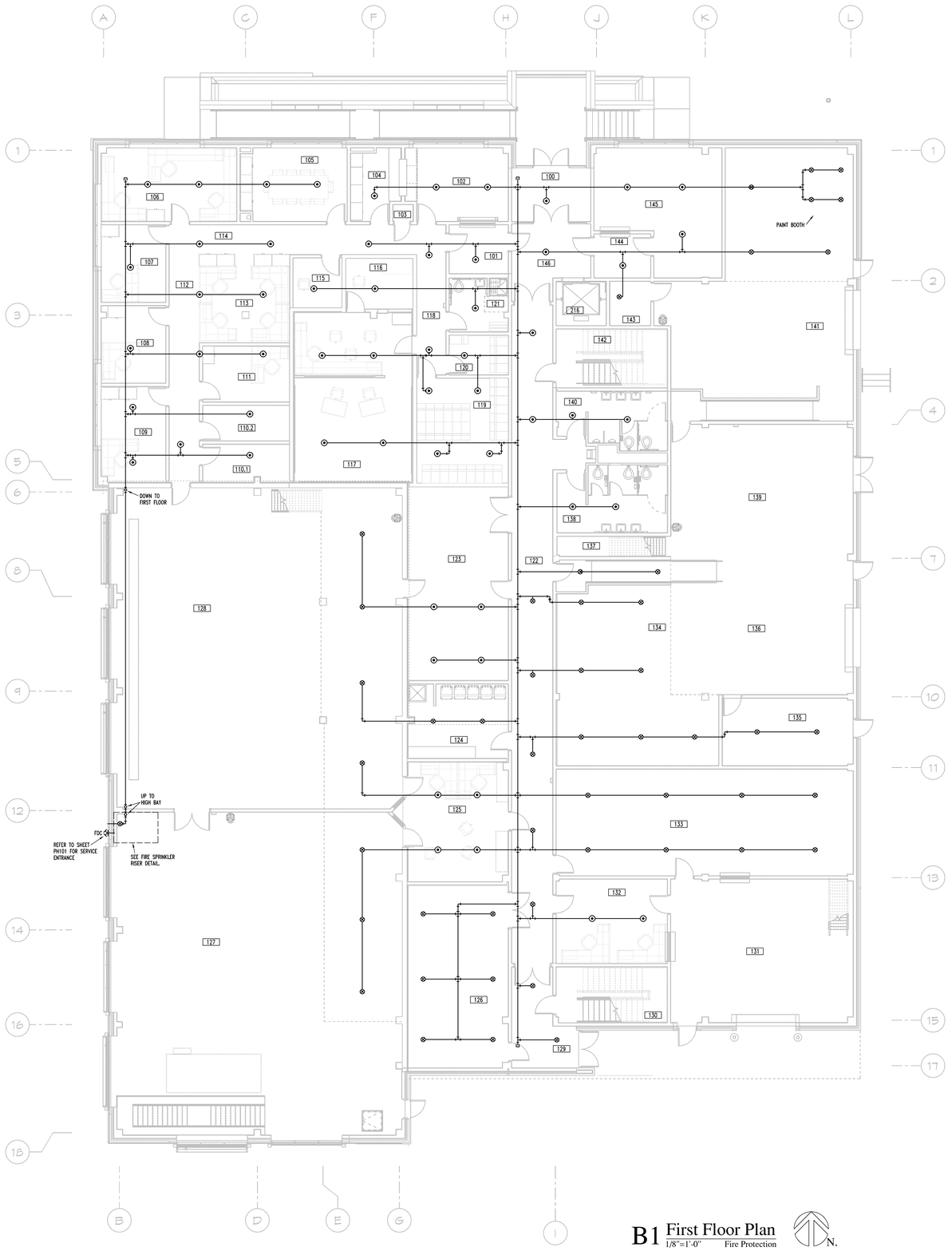

B1 First Floor Plan
1/8"=1'-0" Fire Protection

N.

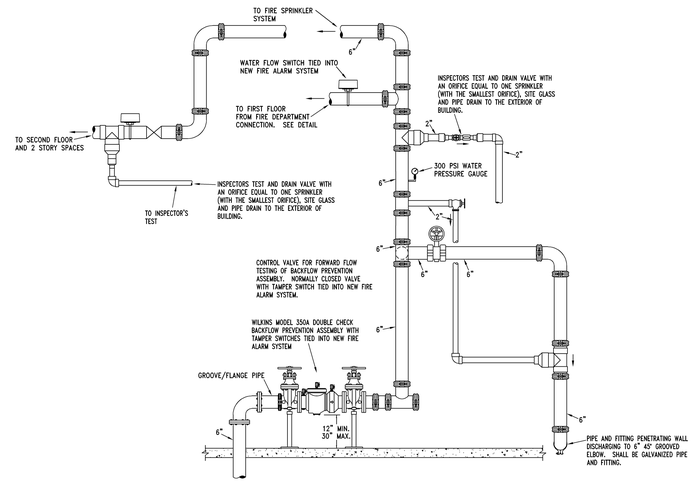

A2 Fire Sprinkler Riser Detail
No Scale

NOTES:

1. FIRE PROTECTION SPRINKLER PIPING IN BASEMENT SHALL BE ROUTED THROUGH FLOOR TRUSSES.
2. PIPE SIZES SHALL BE DETERMINED BY THE INSTALLING CONTRACTOR. SIZING SHALL BE CONFIRMED BY COMPUTER ANALYSIS . COMPUTER ANALYSIS SHALL BE INCLUDED IN THE CONTRACTOR PROVIDED SUBMITTAL DATA.
3. REFER TO MECHANICAL HVAC AND ELECTRICAL LIGHTING PLANS AND REFLECTED CEILING PLANS. ALL SPRINKLER PIPING SHALL BE COORDINATED WITH OTHER TRADES. PROVIDE ALL OFFSETS REQUIRED TO RESULT IN A FULLY FUNCTIONAL SYSTEM THAT IS FULLY COORDINATED.

DESIGN CRITERIA:

WET SYSTEM HYDRAULIC CALCULATED LIGHT HAZARD (OFFICES AND PUBLIC AREAS) WITH DENSITY OF 0.10 GPM/SQ/FT OVER 1500 SqFt. AREA PLUS 100 GPM OUTSIDE HOSE ALLOWANCE. MAXIMUM HEAD SPACE 225 SqFt. MECHANICAL/ELECTRICAL ROOMS, GENERAL STORAGE AREAS AND BUILDING SERVICE AREAS ORDINARY HAZARD WITH DENSITY OF 0.15 GPM/SqFt. PLUS 250 GPM OUTSIDE HOSE ALLOWANCE. MAXIMUM HEAD SPACING 130 SqFt.

FLOW TEST DATA:

STATIC:

RESIDUAL:

FLOW:

DATA:

INFORMATION TO BE PROVIDED BY INSTALLING CONTRACTOR PRIOR TO ENGINEERS REVIEW OF SUBMITTAL DATA

LOCATION: BY WATER DEPARTMENT

HEAD SUMMARY AND LEGEND:

⊗	155°, 1/2" RELIABLE FIR 56 QUICK RESPONSE UPRIGHT
⊙	155°, 1/2" RELIABLE FIR BRASS UPRIGHT
◀	155°, 1/2" QUICK RESPONSE SIDEWALL MOUNTED 4"-12" BELOW OBSTRUCTION.

HTK ARCHITECTS PA
9300 W. 110TH ST. STE. 130
OVERLAND PARK, KANSAS 66210
P: 913.663.5373
9105 KANSAS AVE.
TOPEKA KANSAS 66612
P: 785.266.5373
WWW.HTKARCHITECTS.NET

LS&A
Latimer Sommers & Associates, P.A.
CONSULTING ENGINEERS
3639 SW Summerfield Drive, Suite A
Topeka, Kansas 66614-3974
Telephone: (785) 233-3232
FAX: (785) 233-0647
Email: lsapa@lsapa.com
LSA PROJECT NO. 1402032

WILLIAM R. BASSETT LICENSED 10530 PROFESSIONAL ENGINEER
4-15-15

DATE:
- 4-15-15

REVISED DATE:
- 1-21-14
- 2-9-15
- 3-10-15

HTK PROJECT NUMBER:
- 1410.03

Department of Administration
Office of Facilities and
Procurement Management
800 SW Jackson, Suite 700
Topeka, Kansas 66612-1216
Phone 785-296-8899
FAX 785-296-3456

STATE OF KANSAS
STATE OF KANSAS ENERGY & SERVICE CENTER
Seventh & Van Buren Street, Topeka, Kansas
BUILDING NUMBER 17300-000038
DRAWN BY: CAD CHECKED BY: WRB REV: WRB
DATE: 4-15-15

FIRST FLOOR PLAN - FIRE PROTECTION

A-012651

FH101

CONSTRUCTION DOCUMENTS

JCSBC
2-2-2016
AIL9G--0094

... FH101.dwg 96 04/15/15 GTC

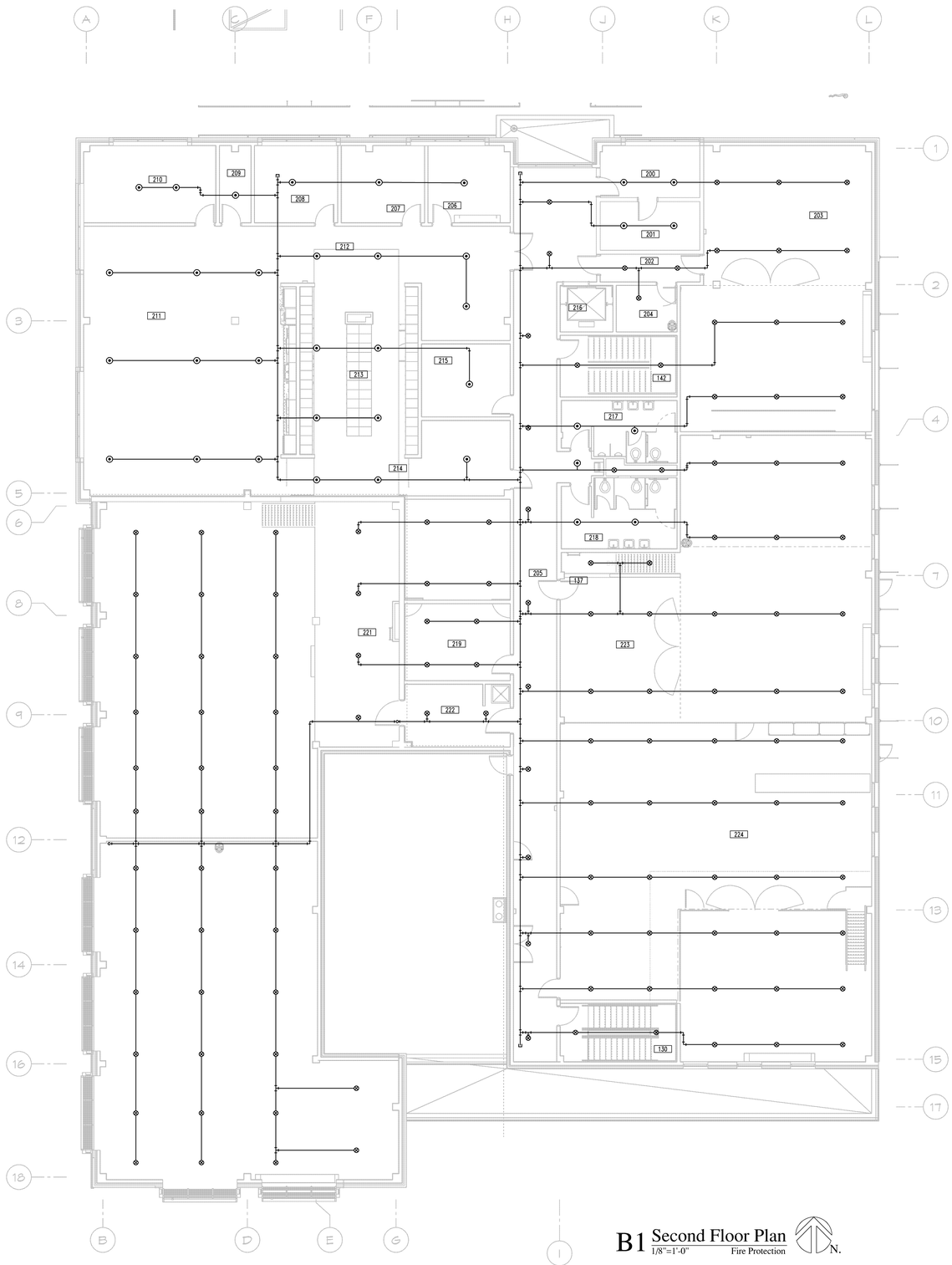

B1 Second Floor Plan
1/8"=1'-0" Fire Protection

N.

HTK ARCHITECTS PA
9300 W. 110TH ST. STE. 130
OVERLAND PARK, KANSAS 66210
P: 913.663.5373
9005 KANSAS AVE.
TOPEKA KANSAS 66612
P: 785.266.5373
WWW.HTKARCHITECTS.NET

LS&A
Latimer Sommers & Associates, P.A.
CONSULTING ENGINEERS
3639 SW Summerfield Drive, Suite A
Topeka, Kansas 66614-3974
Telephone: (785) 233-3232
FAX: (785) 233-0547
Email: lsapa@lsapa.com
LSA PROJECT NO. 1402032

WILLIAM R. BASSETT LICENSED 10530 REGISTERED ARCHITECT
4.15.15

DATE:
- 4-15-15

REVISED DATE:
- 12-18-14
- 2-9-15
- 3-10-15

HTK PROJECT NUMBER:
- 1410.03

Department of Administration
Office of Facilities and
Procurement Management
800 SW Jackson, Suite 700
Topeka, Kansas 66612-1216
Phone 785-296-8899
FAX 785-296-3456

STATE OF KANSAS
STATE OF KANSAS ENERGY & SERVICE CENTER
Seventh & Van Buren Street, Topeka, Kansas
BUILDING NUMBER 173000-00038

DATE: 4-15-15 DRAWN BY: CAD CHECKED BY: WRB REV: WRB

SECOND FLOOR PLAN - FIRE PROTECTION

A-012651

FH102

CONSTRUCTION DOCUMENTS

... FH102.dwg 96 04/14/15 DTC

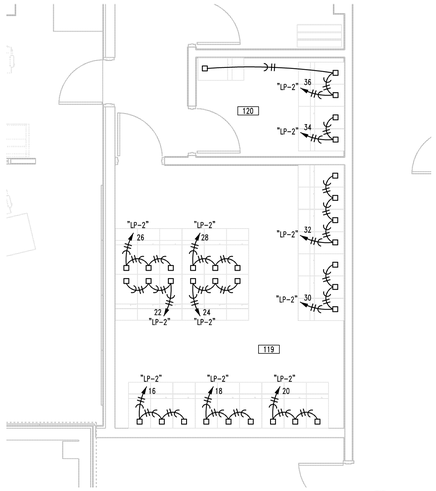

D4 PARTIAL FLOOR PLAN
1/4"=1'-0" POWER N.

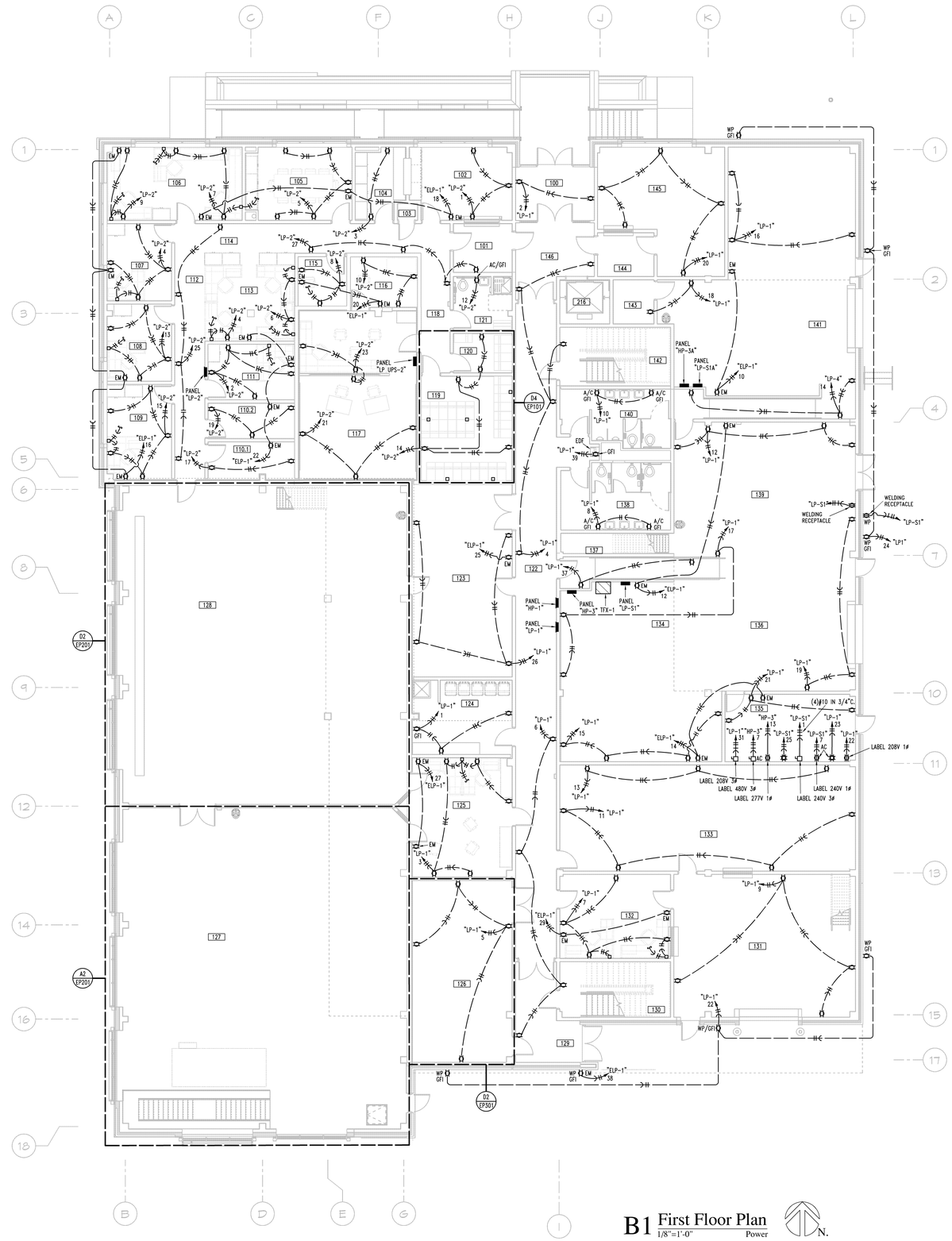

B1 First Floor Plan
1/8"=1'-0" Power N.

HTK ARCHITECTS PA
9300 W 110TH ST STE 130
OVERLAND PARK KANSAS 66210
P: 913 663 5373
9105 KANSAS AVE
TOPEKA KANSAS 66612
P: 785 266 5373
WWW.HTKARCHITECTS.NET

LS&A Latimer Sommers & Associates, P.A.
CONSULTING ENGINEERS
3639 SW Summerfield Drive, Suite A
Topeka, Kansas 66614-3974
Telephone: (785) 233-3232
FAX: (785) 233-0647
Email: lsapa@lsapa.com
LSA PROJECT NO. 1402032

WILLIAM R. GASETTE LICENSED PROFESSIONAL ENGINEER 10530
4-15-15

DATE:
- 4-15-15

REVISED DATE:
- 12-18-14
- 2-9-15
- 3-10-15

HTK PROJECT NUMBER:
- 1410.03

Department of Administration
Office of Facilities and
Procurement Management
800 SW Jackson, Suite 700
Topeka, Kansas 66612-1216
Phone 785-296-8899
FAX 785-296-3456

STATE OF KANSAS
STATE OF KANSAS ENERGY & SERVICE CENTER
Seventh & Van Buren Street, Topeka, Kansas
BUILDING NUMBER 1730000038
DRAWN BY: CAD CHECKED BY: WRB REV: WRB
DATE: 4-15-15

FIRST FLOOR
PLAN - POWER

A-012651

EP101

CONSTRUCTION
DOCUMENTS

JCSBC
2-2-2016
Att.9G.--0096

... EP101.dwg | 04/15/15 DTC

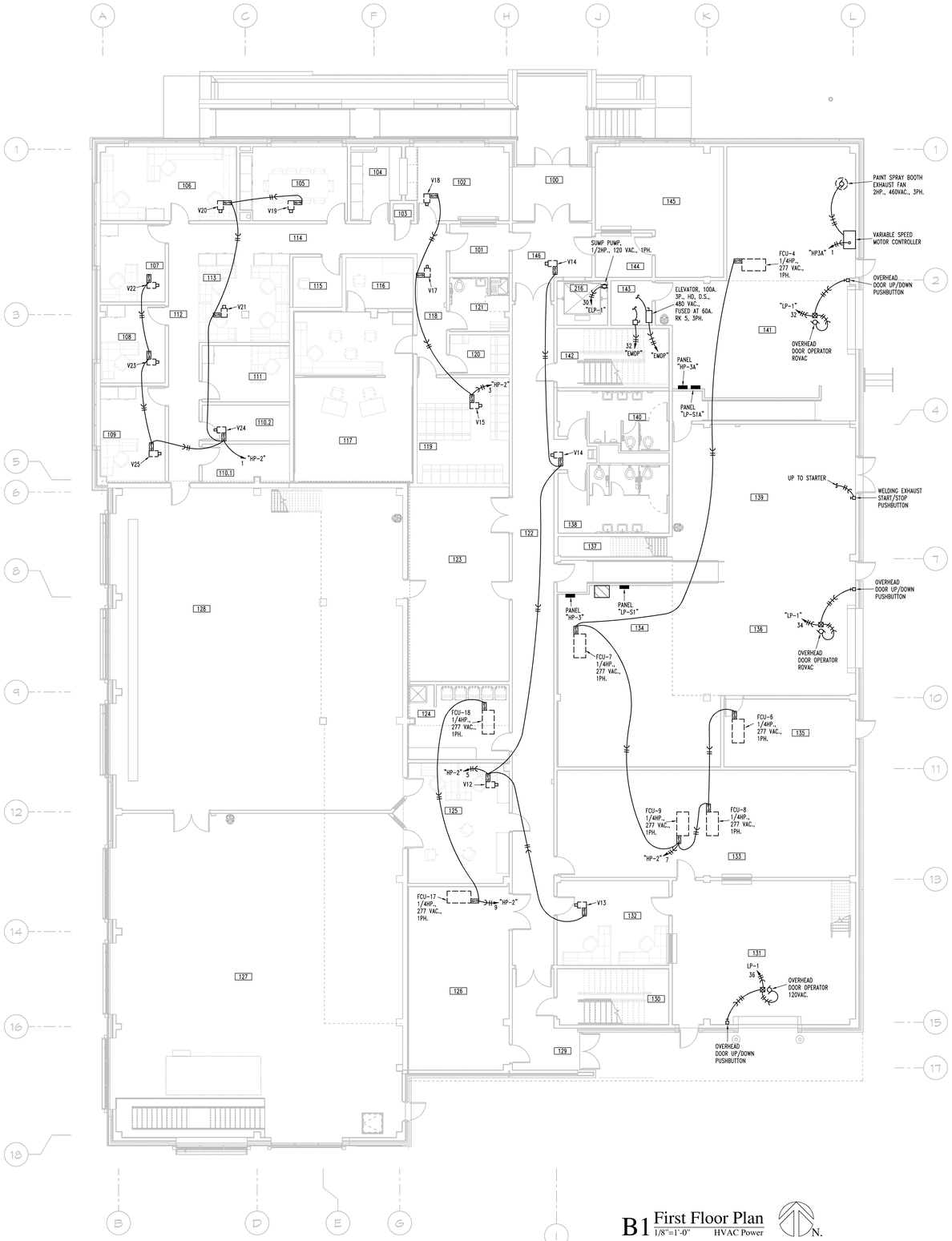

B1 First Floor Plan
1/8"=1'-0" HVAC Power

N.

HTK ARCHITECTS PA
9300 S. KANSAS AVE. TOPEKA KANSAS 66612 P. 785-266-5373
9300 W 110TH ST. STE. 150 OVERLAND PARK KANSAS 66210 P. 913-663-5373
WWW.HTKARCHITECTS.NET

LS&A Latimer Sommers & Associates, P.A.
CONSULTING ENGINEERS
3639 SW Summerfield Drive, Suite A
Topeka, Kansas 66614-3974
Telephone: (785) 233-3232
FAX: (785) 233-0647
Email: lsapa@lsapa.com
LSA PROJECT NO. 1402032

WILLIAM R. BASSETT LICENSED 10530 PROFESSIONAL ENGINEER
4-15-15

DATE:
- 4-15-15

REVISED DATE:
- 12-18-14
- 2-9-15
- 3-10-15

HTK PROJECT NUMBER:
- 1410.03

Department of Administration
Office of Facilities and Procurement Management
800 SW Jackson, Suite 700
Topeka, Kansas 66612-1216
Phone 785-296-8899
FAX 785-296-3456

STATE OF KANSAS
STATE OF KANSAS ENERGY & SERVICE CENTER
Seventh & Van Buren Street, Topeka, Kansas
BUILDING NUMBER 17300-00038

DATE: 4-15-15 DRAWN BY: CAD CHECKED BY: WRB REV: WRB

FIRST FLOOR PLAN - HVAC POWER

A-012651

EP102

CONSTRUCTION DOCUMENTS

JCSBC
2-2-2016
Att.9G.--0097

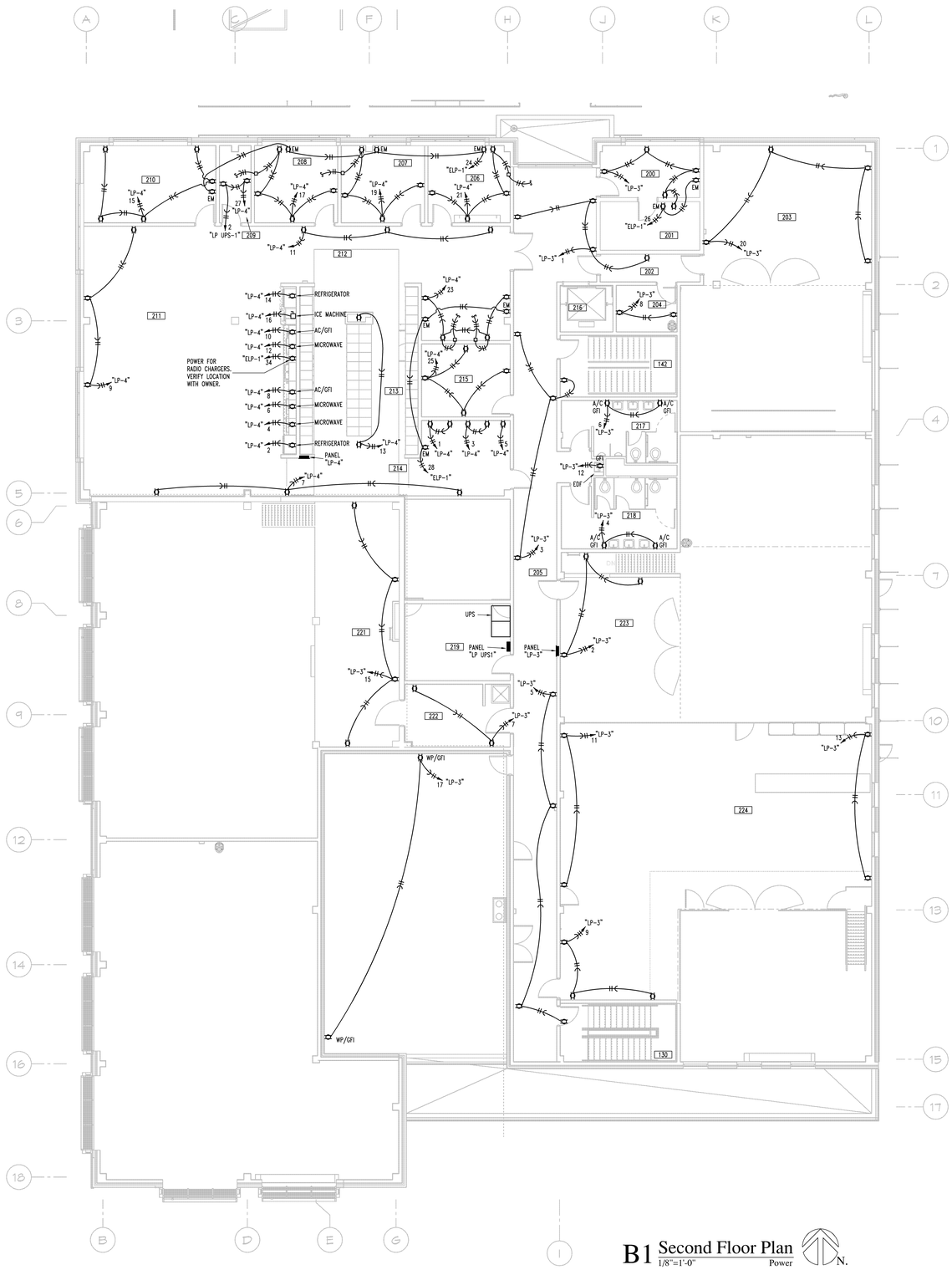

B1 Second Floor Plan

1/8"=1'-0" Power

N.

HTK ARCHITECTS PA
9300 W. 110TH ST. STE. 130
OVERLAND PARK, KANSAS 66210
P: 913.663.5373
9105 KANSAS AVE.
TOPEKA KANSAS 66612
P: 785.266.5373
WWW.HTKARCHITECTS.NET

LS&A
Latimer Sommers & Associates, P.A.
CONSULTING ENGINEERS
3639 SW Summerfield Drive, Suite A
Topeka, Kansas 66614-3974
Telephone: (785) 233-3232
FAX: (785) 233-0547
Email: lsapa@lsapa.com
LSA PROJECT NO. 1402032

WILLIAM R. GASETTE LICENSED PROFESSIONAL ENGINEER 10530
4.15.15

DATE:
- 4-15-15

REVISED DATE:
- 12-18-14
- 2-9-15
- 3-10-15
-
-

HTK PROJECT NUMBER:
- 1410.03

Department of Administration
Office of Facilities and
Procurement Management
800 SW Jackson, Suite 700
Topeka, Kansas 66612-1216
Phone 785-296-68899
FAX 785-296-3456

STATE OF KANSAS
STATE OF KANSAS ENERGY & SERVICE CENTER
Seventh & Van Buren Street, Topeka, Kansas
BUILDING NUMBER 1730000038

DRAWN BY: CAD CHECKED BY: WRB REV: WRB
DATE: 4-15-15

SECOND FLOOR PLAN - POWER

A-012651

EP103

CONSTRUCTION DOCUMENTS

... EP103.dwg 04/14/15 JJD

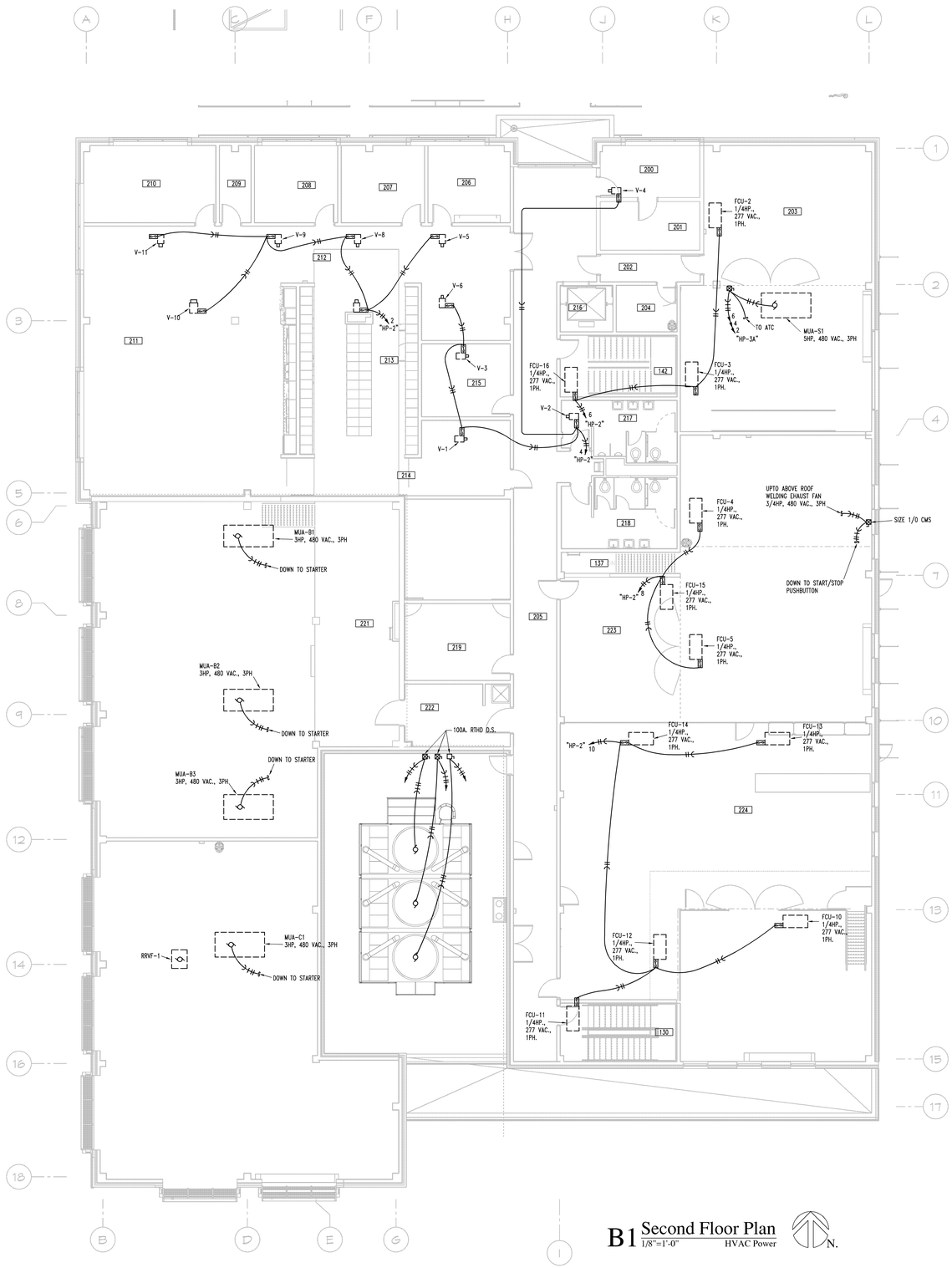

B1 Second Floor Plan
1/8"=1'-0" HVAC Power

N.

HTK ARCHITECTS PA
9300 W 110TH ST STE 130
OVERLAND PARK KANSAS 66210
P: 913 663 5373
9005 KANSAS AVE
TOPEKA KANSAS 66612
P: 785 266 5373
WWW.HTKARCHITECTS.NET

LS&A
Latimer Sommers & Associates, P.A.
CONSULTING ENGINEERS
3639 SW Summerfield Drive, Suite A
Topeka, Kansas 66614-3974
Telephone: (785) 233-3232
FAX: (785) 233-0547
Email: lsapa@lsapa.com
LSA PROJECT NO. 1402032

WILLIAM R. BASSETT LICENSED 10530 REGISTERED ARCHITECT
4.15.15

DATE:
- 4-15-15

REVISED DATE:
- 12-18-14
- 2-9-15
- 3-10-15

HTK PROJECT NUMBER:
- 1410.03

Department of Administration
Office of Facilities and
Procurement Management
800 SW Jackson, Suite 700
Topeka, Kansas 66612-1216
Phone 785-296-8899
FAX 785-296-3456

STATE OF KANSAS
STATE OF KANSAS ENERGY & SERVICE CENTER
Seventh & Van Buren Street, Topeka, Kansas
BUILDING NUMBER 173000000038
DRAWN BY: CAD CHECKED BY: WRB REV: WRB
DATE: 4-15-15

SECOND FLOOR PLAN
- HVAC POWER

A-012651

EP104

CONSTRUCTION
DOCUMENTS

JCSBC
2-2-2016
Att.NG.-0099

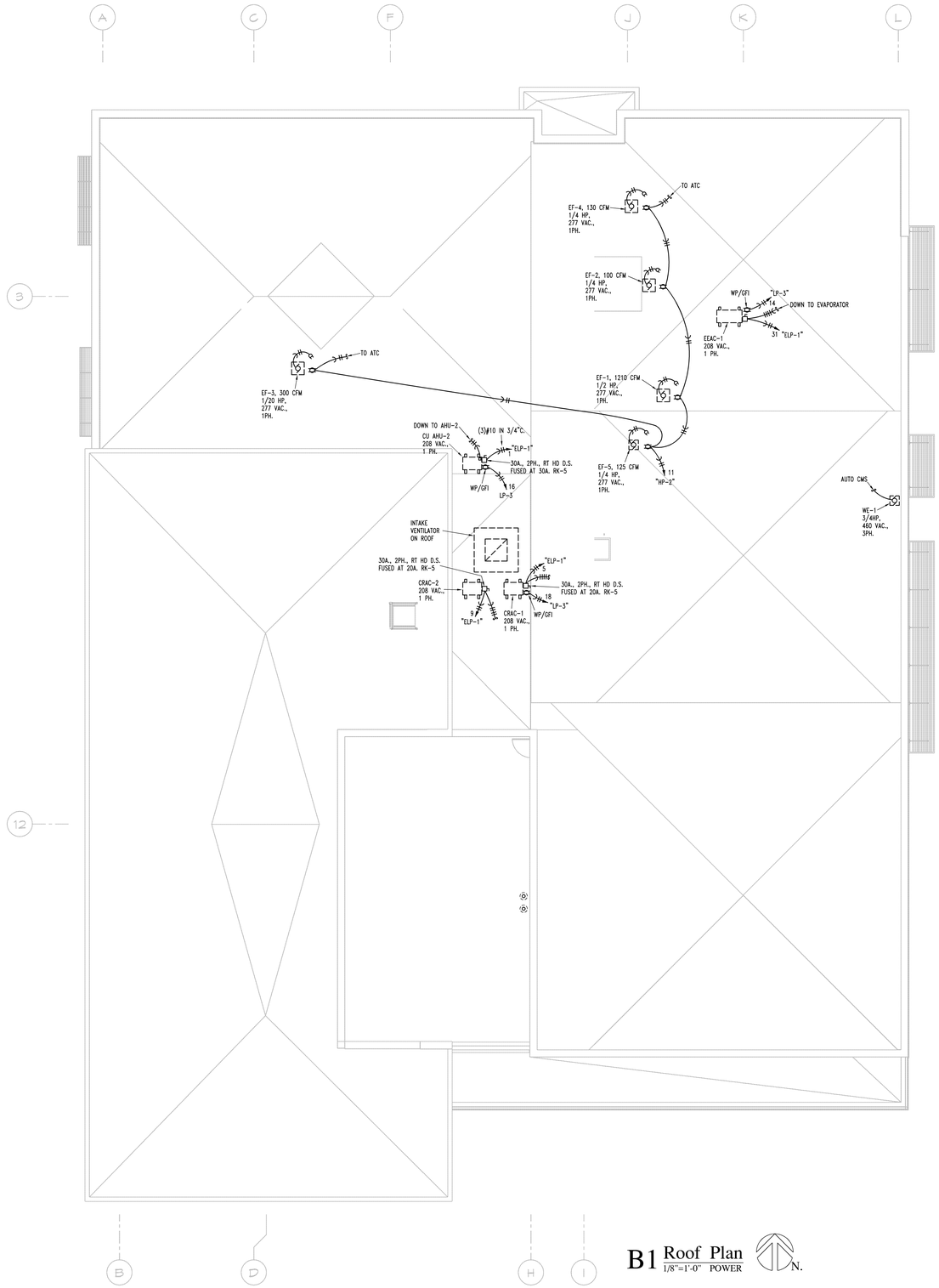

B1 Roof Plan
1/8"=1'-0" POWER

N.

HTK ARCHITECTS PA
9300 W. 110TH ST. STE. 130
OVERLAND PARK KANSAS 66210
P: 913.663.5373
3900 S. KANSAS AVE.
TOPEKA KANSAS 66612
P: 785.266.5373
WWW.HTKARCHITECTS.NET

LS&A
Latimer Sommers & Associates, P.A.
CONSULTING ENGINEERS
3639 SW Summerfield Drive, Suite A
Topeka, Kansas 66614-3974
Telephone: (785) 233-3232
FAX: (785) 233-0647
Email: lsapa@lsapa.com
LSA PROJECT NO. 1402032

WILLIAM R. BASSETT
LICENSED
10530
PROFESSIONAL ENGINEER
4.15.15

DATE:
- 4-15-15

REVISED DATE:
- 12-18-14
- 2-9-15
- 3-10-15
-

HTK PROJECT NUMBER:
- 1410.03

Department of Administration
Office of Facilities and
Procurement Management
800 SW Jackson, Suite 700
Topeka, Kansas 66612-1216
Phone 785-296-8899
FAX 785-296-3456

STATE OF KANSAS
STATE OF KANSAS ENERGY & SERVICE CENTER
Seventh & Van Buren Street, Topeka, Kansas
BUILDING NUMBER 1730000038

DRAWN BY: CAD
CHECKED BY: WRB
REV: WRB
DATE: 4-15-15

ROOF PLAN - POWER

A-012651

EP105

CONSTRUCTION DOCUMENTS

J:\2014\1410.03 SOK Energy & Service Center\Drawings\Revit\1410.03_SOK_EP105.dwg 4/14/15 DTC

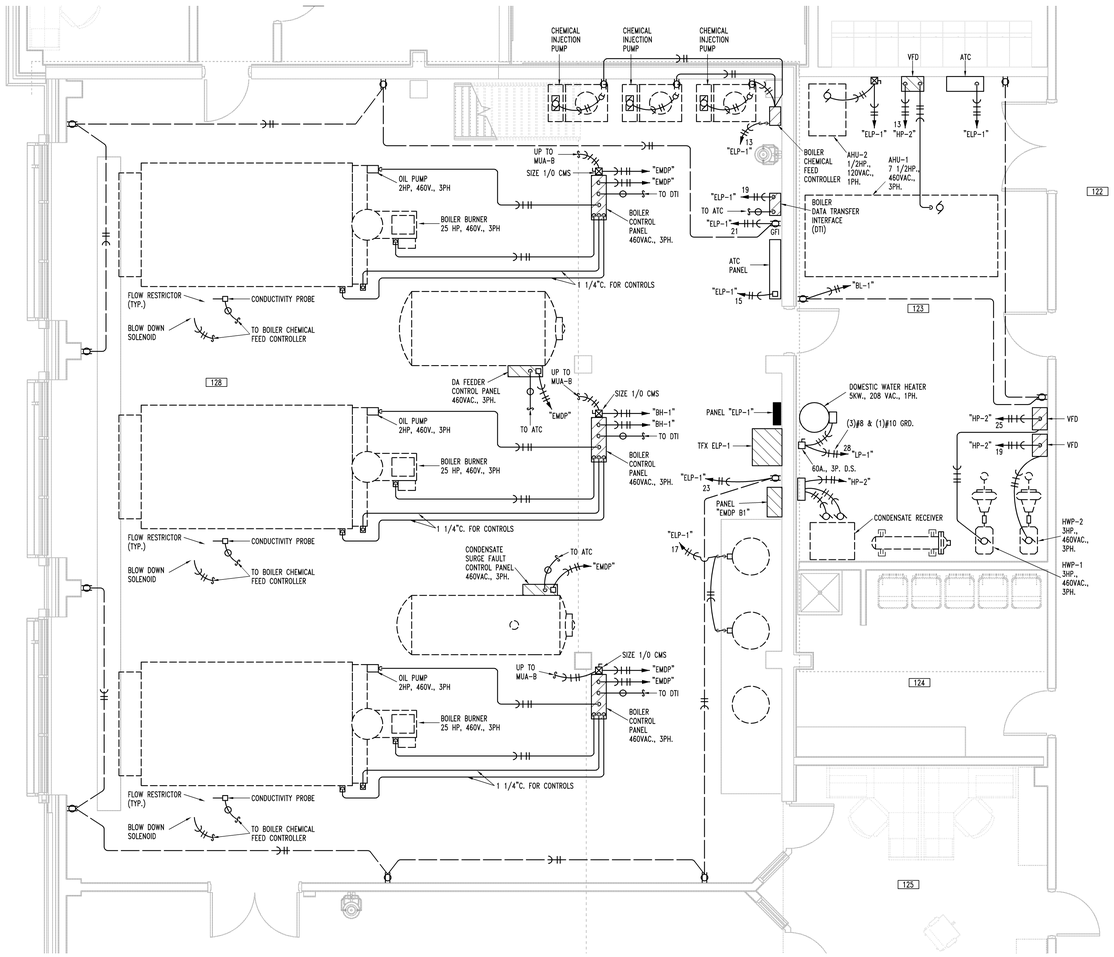

D2 PARTIAL FIRST FLOOR PLAN - BOILER ROOM
1/4"=1'-0"
Power
N.

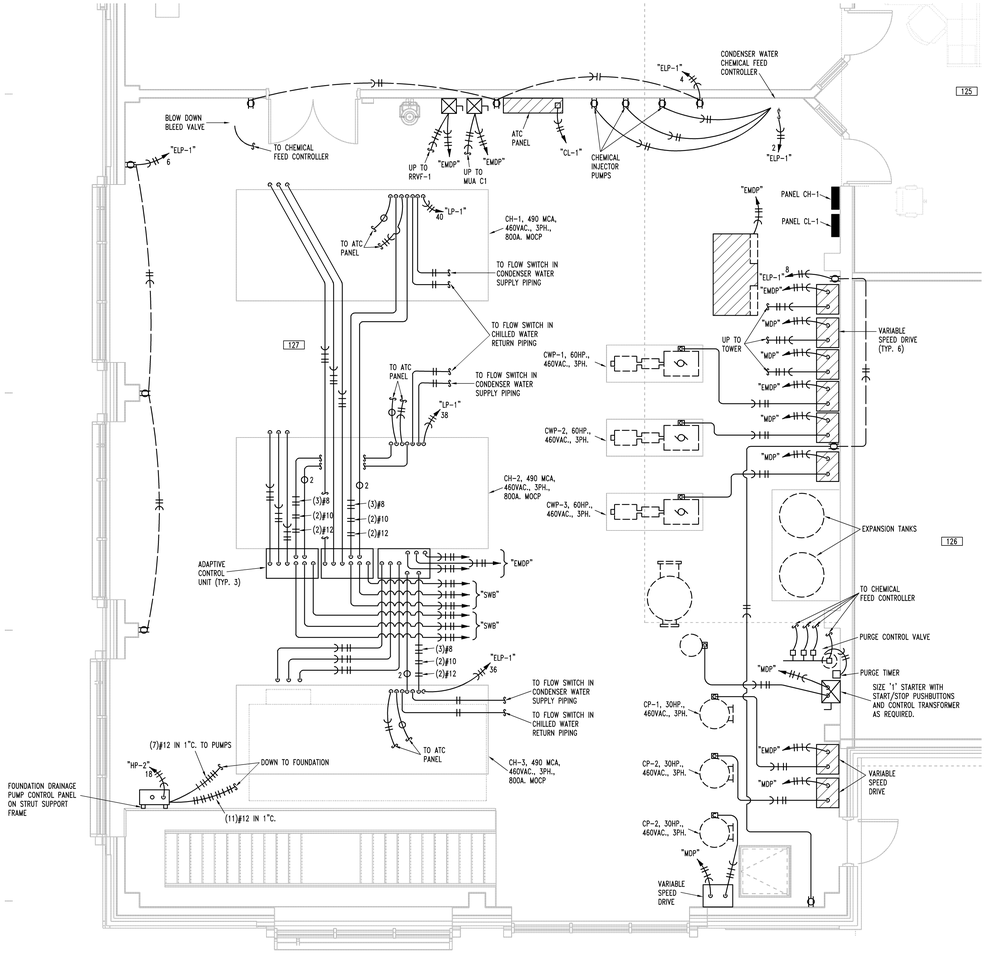

A2 PARTIAL FIRST FLOOR PLAN - CHILLER ROOM
1/4"=1'-0"
Power
N.

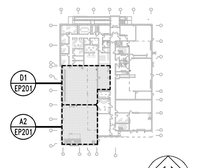

KEY PLAN
NO SCALE
N.

HTK ARCHITECTS PA
9300 W. 110TH ST. STE. 130
OVERLAND PARK KANSAS 66210
P: 913.663.5373
9105 KANSAS AVE.
TOPEKA KANSAS 66612
P: 785.266.5373
WWW.HTKARCHITECTS.NET

LS&A
Latimer Sommers & Associates, P.A.
CONSULTING ENGINEERS
3639 SW Summerfield Drive, Suite A
Topeka, Kansas 66614-3974
Telephone: (785) 233-3232
FAX: (785) 233-0547
Email: lsapa@lsapa.com
LSA PROJECT NO. 1402032

WILLIAM R. BASETTE
LICENSED
10530
PROFESSIONAL ENGINEER
4-15-15

DATE:
- 4-15-15

REVISED DATE:
- 12-18-14
- 2-9-15
- 3-10-15

HTK PROJECT NUMBER:
- 1410.03

Department of Administration
Office of Facilities and
Procurement Management
800 SW Jackson, Suite 700
Topeka, Kansas 66612-1216
Phone 785-296-8899
FAX 785-296-3456

STATE OF KANSAS
STATE OF KANSAS ENERGY & SERVICE CENTER
Seventh & Van Buren Street, Topeka, Kansas
BUILDING NUMBER 17300-000038
DRAWN BY: CAD
CHECKED BY: WRB
REV: WRB
DATE: 4-15-15

PARTIAL FIRST FLOOR PLANS - POWER

A-012651

EP201

CONSTRUCTION DOCUMENTS

JCSBC
2-2-2016
Att.9G--0101

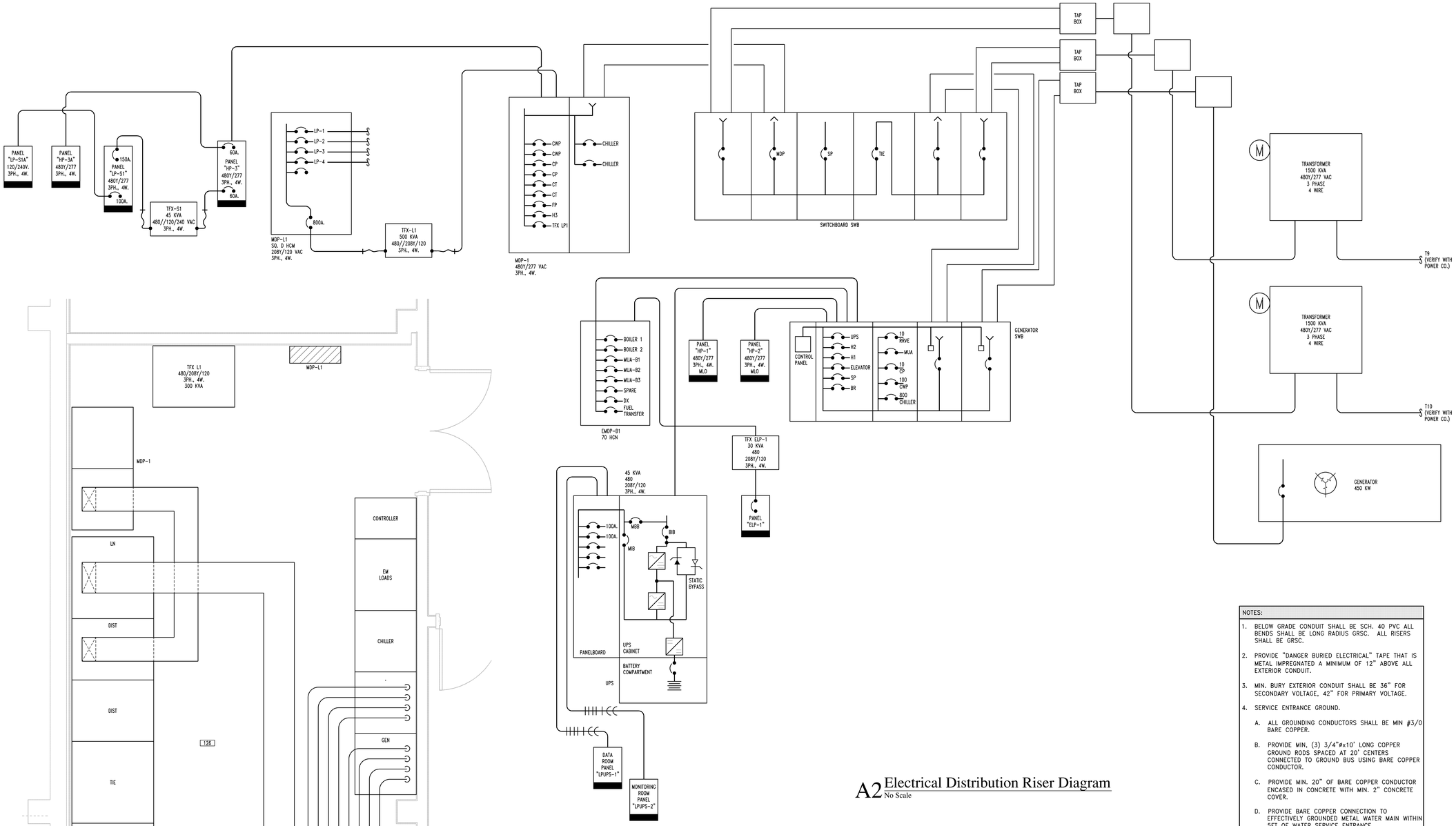

D1 Partial Floor Plan
1/2"=1'-0" Electrical

A2 Electrical Distribution Riser Diagram
No Scale

LOADS: EMDP-B1					
			CIRCUIT BREAKER		FLA
			FRAME	TRIP	
BOILER	30 HP	23 KW	100	80	40
BOILER	30 HP	23 KW	100	80	40
BOILER	30 HP	23 KW	100	80	40
MUA-B1	3 HP	3 KW	100	15	5
MUA-B2	3 HP	3 KW	100	15	5
MUA-B3	3 HP	3 KW	100	15	5
SURGE TANK	(2) 5 HP	8 KW	100	30	16
DA TANK	(2) 15 HP	24 KW	100	100	42
FUEL TRANSFER UNIT	(2) 1 HP	2 KW	100	15	5
HWP-1	3 HP	3 KW	100	15	5
HWP-2	3 HP	3 KW	100	15	5
CR-1		3 KW	100	15	5
TFX ELP-1		45 KW	100	70	50

LOADS: MDP-1				
			CIRCUIT BREAKER	
			FRAME	TRIP
CHILLER	260 KW	325 KVA	800	800
CHILLER	260 KW	325 KVA	800	800
CWP	60 HP, 45 KW	50 KVA	250	110
CWP	60 HP, 45 KW	50 KVA	250	110
CP	30 HP, 23 KW	26 KVA	100	80
CP	30 HP, 23 KW	26 KVA	100	80
CT	25 HP, 19 KW	24 KVA	100	70
CT	25 HP, 19 KW	24 KVA	100	70
FP	7 1/2 HP, 6 KW	8 KVA	100	20
H3		113 KVA	250	150
TFX L-1		147 KVA	800	600

LOADS: GENERATOR EMDP					
				CIRCUIT BREAKER	
				FRAME	TRIP
CHILLER		218 KW	243 KVA	800	800
COOLING TOWER	25 HP	19 KW	24 KVA	100	70
CWP	60 HP	45 KW	50 KVA	250	110
CP	30 HP	23 KW	26 KVA	100	80
MUA	3 HP	3 KW	4 KVA	100	15
RRVE	3 HP	3 KW	4 KVA	100	15
BOILER ROOM		166 KW	200 KVA	400	300
PANEL "HP-1"		30 KW	38 KVA	100	100
PANEL "HP-2"		47 KW	58 KVA	100	100
UPS		36 KW	45 KVA	100	70
ELEVATOR		34 A	23 KVA	100	90

LOADS: MDP-L1, 800A., MAINS WITH 800A., C.B.				
			CIRCUIT BREAKER	
			FRAME	TRIP
PANEL "LP-1"	33.2 KW	41.5 KVA	250	150
PANEL "LP-2"	32 KW	40 KVA	250	150
PANEL "LP-3"	24.2 KW	30.25 KVA	100	100
PANEL "LP-4"	28.3 KW	35.4 KVA	100	100

UPS LOADS:	
DATA ROOM PANEL	10 KW
MONITORING ROOM PANEL	10 KW

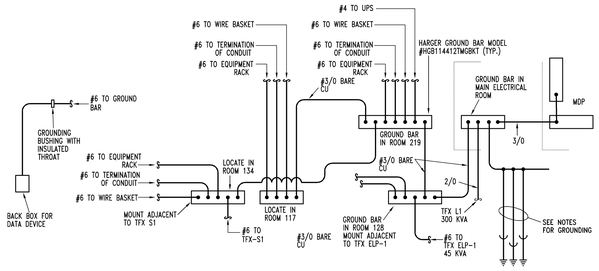

A1 Grounding System Detail
No Scale

NOTES:

1. BELOW GRADE CONDUIT SHALL BE SCH. 40 PVC ALL BENDS SHALL BE LONG RADIUS GRSC. ALL RISERS SHALL BE GRSC.
2. PROVIDE "DANGER BURIED ELECTRICAL" TAPE THAT IS METAL IMPREGNATED A MINIMUM OF 12" ABOVE ALL EXTERIOR CONDUIT.
3. MIN. BURY EXTERIOR CONDUIT SHALL BE 36" FOR SECONDARY VOLTAGE, 42" FOR PRIMARY VOLTAGE.
4. SERVICE ENTRANCE GROUND.
   - A. ALL GROUNDING CONDUCTORS SHALL BE MIN #3/0 BARE COPPER.
   - B. PROVIDE MIN. (3) 3/4"ø x 10' LONG COPPER GROUND RODS SPACED AT 20' CENTERS CONNECTED TO GROUND BUS USING BARE COPPER CONDUCTOR.
   - C. PROVIDE MIN. 20" OF BARE COPPER CONDUCTOR ENCASED IN CONCRETE WITH MIN. 2" CONCRETE COVER.
   - D. PROVIDE BARE COPPER CONNECTION TO EFFECTIVELY GROUNDED METAL WATER MAIN WITHIN 5FT OF WATER SERVICE ENTRANCE.
   - E. PROVIDE BARE COPPER GROUND TO STRUCTURAL STEEL FRAME OF THE BUILDING.

HTK ARCHITECTS PA
9300 W. 110TH ST. STE. 130
OVERLAND PARK, KANSAS 66210
P: 913.663.5373
WWW.HTKARCHITECTS.NET

LS&A Latimer Sommers & Associates, P.A.
CONSULTING ENGINEERS
3639 SW Summerfield Drive, Suite A
Topeka, Kansas 66614-3974
Telephone: (785) 233-3232
FAX: (785) 233-0647
Email: lsapa@lsapa.com
LSA PROJECT NO. 1402032

WILLIAM R. BASSETT LICENSED 10530 PROFESSIONAL ENGINEER
4-15-15

DATE:
- 4-15-15

REVISED DATE:
- 12-18-14
- 2-9-15
- 3-10-15

HTK PROJECT NUMBER:
- 1410.03

Department of Administration
Office of Facilities and
Procurement Management
800 SW Jackson, Suite 700
Topeka, Kansas 66612-1216
Phone 785-296-8899
FAX 785-296-3456

STATE OF KANSAS
STATE OF KANSAS ENERGY & SERVICE CENTER
Seventh & Van Buren Street, Topeka, Kansas
BUILDING NUMBER 1730000038

DATE: 4-15-15 DRAWN BY: CAD CHECKED BY: WRB REV: WRB

ELECTRICAL DETAILS

A-012651

EP301

CONSTRUCTION DOCUMENTS

JCSBC
2-2-2016
Att.9G.--0102

GENERATOR NOTE:
THIS GENERATOR IS EXISTING AND IS IN STORAGE IN A STATE OWNED FACILITY IN TOPEKA KANSAS. THE GENERATOR SHALL BE TRANSPORTED TO THE NEW ENERGY CENTER. THE GENERATOR IS CURRENTLY CONFIGURED TO SUPPLY POWER AT A VOLTAGE CHARACTERISTIC OF 208Y/120V., 3PH., 4 WIRE. THE GENERATOR SHALL BE RECONFIGURED BY THE MANUFACTURERS SERVICE TECHNICIANS TO A VOLTAGE CHARACTERISTIC OF 480Y/277V., 3PH., 4 WIRE. ALL COSTS ASSOCIATED WITH THIS WORK SHALL BE INCLUDED IN THE CONTRACTORS BID.

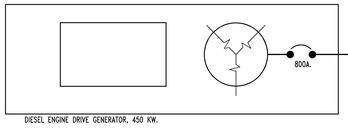

DIESEL ENGINE DRIVE GENERATOR, 450 KW.

GENERATOR SWITCHBOARD NOTE:
THIS IS AN EXISTING SWITCHBOARD THAT IS CURRENTLY CONFIGURED AT A VOLTAGE CHARACTERISTIC OF 208Y/120V., 3PH., 4 WIRE. THE SWITCHBOARD SHALL BE RECONFIGURED TO 480Y/277V., 3PH., 4 WIRE BY MANUFACTURERS SERVICE TECHNICIANS. THIS SHALL INCLUDE BUT NOT BE LIMITED TO REPLACEMENT OF RELAYS, PROGRAMMING, REPLACEMENT OF LSI TRIP UNITS WITH LSIG TRIP UNITS, RELABELING OF THE SWITCHBOARD. ADDITIONAL CIRCUIT BREAKERS AND SWITCHBOARD SECTIONS SHALL BE PROVIDED AS REQUIRED. ALL COSTS FOR THIS WORK SHALL BE INCLUDED IN THE CONTRACTORS BID.

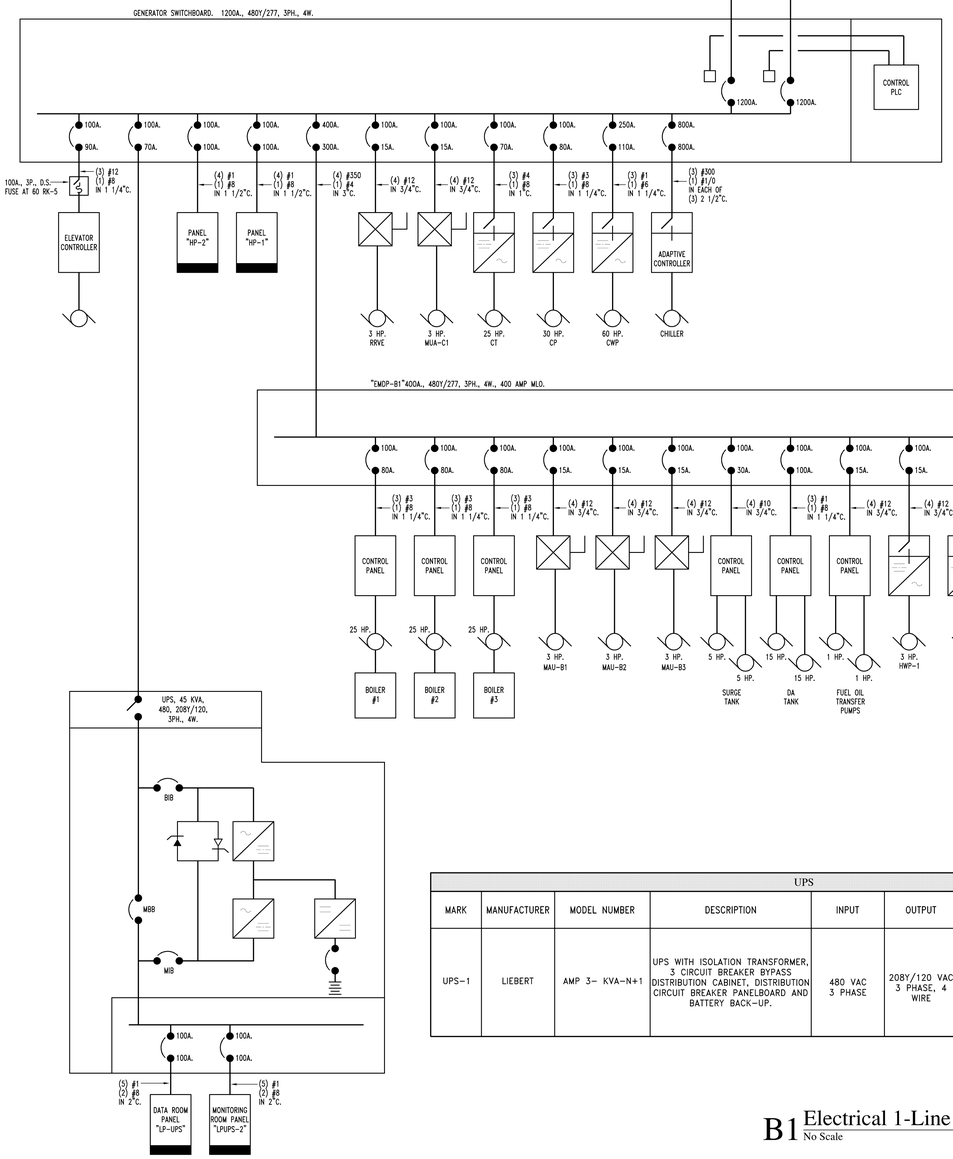

UPS								
MARK	MANUFACTURER	MODEL NUMBER	DESCRIPTION	INPUT	OUTPUT	DISTRIBUTION	BATTERIES	REMARKS
UPS-1	LIEBERT	AMP 3- KVA-N+1	UPS WITH ISOLATION TRANSFORMER, 3 CIRCUIT BREAKER BYPASS DISTRIBUTION CABINET, DISTRIBUTION CIRCUIT BREAKER PANELBOARD AND BATTERY BACK-UP.	480 VAC 3 PHASE	208Y/120 VAC 3 PHASE, 4 WIRE	PROVIDE (3) 100A., 3P., DISTRIBUTION CIRCUIT BREAKERS (1) TO BE SPARE	PROVIDE ADEQUATE BATTERIES TO SUPPORT 30KW FOR A MINIMUM OF 12 MINUTES	

B1 Electrical 1-Line Diagram
No Scale

HTK ARCHITECTS PA
3905 S. KANSAS AVE. TOPEKA KANSAS 66612 P: 785-266-5923
3200 W. 110TH ST. STE. 130 OVERLAND PARK KANSAS 66210 P: 913 663-5373
WWW.HTKARCHITECTS.NET

LS&A
Latimer Sommers & Associates, P.A.
CONSULTING ENGINEERS
3639 SW Summerfield Drive, Suite A
Topeka, Kansas 66614-3974
Telephone: (785) 233-3232
FAX: (785) 233-0647
Email: lsapa@lsapa.com
LSA PROJECT NO. 1402032

WILLIAM R. GASSETTE 10530 LICENSED PROFESSIONAL ENGINEER
4-15-15

DATE:
- 4-15-15

REVISED DATE:
- 12-18-14
- 2-9-15
- 3-10-15

HTK PROJECT NUMBER:
- 1410.03

Department of Administration
Office of Facilities and
Procurement Management
800 SW Jackson, Suite 700
Topeka, Kansas 66612-1216
Phone 785-296-8899
FAX 785-296-3456

STATE OF KANSAS
STATE OF KANSAS ENERGY & SERVICE CENTER
Seventh & Van Buren Street, Topeka, Kansas
BUILDING NUMBER 17300-00038
DATE: 4-15-15 DRAWN BY: CAD CHECKED BY: WRB REV: WRB

ONE-LINE DIAGRAM

A-012651

EP302

CONSTRUCTION DOCUMENTS

JCSBC
2-2-2016
Att.9G--0103

PANELBOARD SCHEDULE

PANEL NO.: "HP-1" | LOCATION: CORRIDOR 112 | KAIC: .

PANEL TYPE: SQ D NEHB | VOLTS: 480Y/277 | PHASE: 3 | WIRE: 4 | MAINS: 100A. MLO

DESCRIPTION	WATTS/PHASE A	B	C	WIRE SIZE	C/B TRIP	CKT	CKT	C/B TRIP	WIRE SIZE	WATTS/PHASE A	B	C	DESCRIPTION
LIGHTING KHP OFFICES	2000			#12	20	1	2	20	#12	2880			LTG. RM. 131, 223, 224
LIGHTING KHP OFFICES		1280		#12	20	3	4	20	#12		2400		LTG. 2ND FL CORR., TOILET RM.
LIGHTING ROOM 117			560	#12	20	5	6	20	#12			2480	LTG. 2ND FL. N. MAINT. OFFICES
LTG. 1ST FL CORR., TOILET RM.	2400			#12	20	7	8	20	#12	1360			LTG. RM. 211
LTG. OFFICES S. END OF 1ST FL.		2560		#12	20	9	10	20	#12		300		SITE LIGHTING
LIGHTING, BOILER ROOM			2560	#12	20	11	12	20	#12			300	SITE LIGHTING
LIGHTING, CHILLER ROOM	2000			#12	20	13	14	20	#12	500			SITE LIGHTING
LTG. RM. 139, 134, 136		2800		#12	20	15	16	20	#12		100		SITE LIGHTING
LTG. RM. 141, 143, 144, 145, 203			2400	#12	20	17	18						SPACE
TUNNEL LIGHTING	900			#12	20	19	20						SPACE
TUNNEL LIGHTING		1800		#12	20	21	22						SPACE
SPACE						23	24						SPACE
SPACE						25	26						SPACE
SPACE						27	28						SPACE
SPACE						29	30						SPACE
CONNECTED LOAD	7300	8445	5520							4740	2800	2780	CONNECTED LOAD

PANELBOARD SCHEDULE

PANEL NO.: "HP-2" | LOCATION: 1ST FL. MAIN ELECTRICAL ROOM | KAIC: 10

PANEL TYPE: SQ D NEHB | VOLTS: 480Y/277 | PHASE: 3 | WIRE: 4 | MAINS: 100A. MLO

DESCRIPTION	WATTS/PHASE A	B	C	WIRE SIZE	C/B TRIP	CKT	CKT	C/B TRIP	WIRE SIZE	WATTS/PHASE A	B	C	DESCRIPTION
VAV TERMINALS 1ST FL. NW OFFICES	1950			#12	20	1	2	20	#12	1600			VAV TERMINALS 2ND FL. N. OFFICES
VAV TERMINALS 1ST FL. NW OFFICES		830		#12	20	3	4	20	#12		1100		VAV TERMINALS 2ND FL. N. OFFICES
VAV TERMINALS 1ST FL. CORR. AND OFFICES			1100	#12	20	5	6	20	#12			2500	FCU'S 2ND FL. NORTH
FCU'S 1ST FL. EAST	4155			#12	20	7	8	20	#12	2500			FCU'S 2ND FL. CENTER
FCU'S 1ST FL. WEST		1660		#12	20	9	10	20	#12		4155		FCU'S 2ND FL. SOUTH
EXHAUST FANS			4150	#12	20	11	12	20	#12			·	CONDENSATE RECEIVER
AHU-1	3900			#10	30	13	14		#12	·			
10 HP, 460 VAC, 3 PHASE		3900		#10		15	16	3P	#12		·		
			3900	#10	3P	17	18	20	#12			1700	FOUNDATION DRAINAGE PUMP
HWP-1	1330			#12	20	19	20		#12	1700			(2) 1-1/2HP, 460 VAC, 3 PHASE
3 HP, 460 VAC, 3 PHASE		1330		#12		21	22	3P	#12		1700		
			1330	#12	3P	23	24	20	#12			X	SPARE
HWP-2	1330			#12	20	25	26	20	#12	X			SPARE
3 HP, 460 VAC, 3 PHASE		1330		#12		27	28	20	#12		X		SPARE
			1330	#12	3P	29	30	20	#12			X	SPARE
CONNECTED LOAD	12665	9050	11810							5800	6955	4200	CONNECTED LOAD

PANELBOARD SCHEDULE

PANEL NO.: "HP-3" | LOCATION: FIRST FLOOR SHOP ROOM 134 | KAIC: .

PANEL TYPE: SQ D NEHB | VOLTS: 480Y/277 | PHASE: 3 | WIRE: 4 | MAINS: 150A. MLO

DESCRIPTION	WATTS/PHASE A	B	C	WIRE SIZE	C/B TRIP	CKT	CKT	C/B TRIP	WIRE SIZE	WATTS/PHASE A	B	C	DESCRIPTION
PANEL "HP-3A"	11080			#12	60	1	2	20	#12	500			WELDING EXHAUST FAN
		11080		#12		3	4		#12		500		3/4 HP, 460 VAC, 3 PHASE
			11080	#12	3P	5	6	3P	#12			500	
TEST CIRCUIT RM. 135, 3 PHASE	2000			#10	30	7	8	70		12000			TRANSFORMER TFX-S1
		2000		#10		9	10				12000		45 KVA
			2000	#10	3P	11	12	3P				12000	
TEST CIRCUIT RM. 135, SINGLE PHASE	2000			#12	20	13	14	20		2000			SPARE
SPARE		2000			20	15	16	20			2000		SPARE
SPARE			2000		20	17	18	20				2000	SPARE
SPARE	2000				20	19	20	20		2000			SPARE
SPARE		2000			20	21	22	20			2000		SPARE
SPARE			2000		20	23	24	20				2000	SPARE
SPARE	2000				20	25	26	20		2000			SPARE
SPARE		2000			20	27	28	20			2000		SPARE
SPARE			2000		20	29	30	20				2000	SPARE
CONNECTED LOAD	19080	19080	19080							18500	18500	18500	CONNECTED LOAD

PANELBOARD SCHEDULE

PANEL NO.: "HP-3A" | LOCATION: FIRST FLOOR ROOM 141 | KAIC: .

PANEL TYPE: SQ D NEHB | VOLTS: 480Y/277 | PHASE: 3 | WIRE: 4 | MAINS: 100A. MLO

DESCRIPTION	WATTS/PHASE A	B	C	WIRE SIZE	C/B TRIP	CKT	CKT	C/B TRIP	WIRE SIZE	WATTS/PHASE A	B	C	DESCRIPTION
PAINT SPRAY BOOTH EXHAUST	950			#12	20	1	2	20		2200			MUA-S1, 5 HP, 3 PHASE
2 HP, 460 VAC, 3 PHASE		950		#12		3	4				2200		
			950	#12	3P	5	6	3P				2200	
SPARE	2000				20	7	8	20		2000			SPARE
SPARE		2000			20	9	10	20			2000		SPARE
SPARE			2000		20	11	12	20				2000	SPARE
SPARE	2000				20	13	14	20		2000			SPARE
SPARE		2000			20	15	16	20			2000		SPARE
SPARE			2000		20	17	18	20				2000	SPARE
SPARE	2000				20	19	20	20		2000			SPARE
SPARE		2000			20	21	22	20			2000		SPARE
SPARE			2000		20	23	24	20				2000	SPARE
SPARE	2000				20	25	26	20		2000			SPARE
SPARE		2000			20	27	28	20			2000		SPARE
SPARE			2000		20	29	30	20				2000	SPARE
CONNECTED LOAD	8950	8950	8950							10000	10000	10000	CONNECTED LOAD

PANELBOARD SCHEDULE

PANEL NO.: "LP-1" | LOCATION: FIRST FLOOR CORRIDOR | KAIC: .

PANEL TYPE: SQ D NQOD WITH BOLT ON CIRCUIT BREAKERS | VOLTS: 208Y/120 | PHASE: 3 | WIRE: 4 | MAINS: 150A. MLO

DESCRIPTION	WATTS/PHASE A	B	C	WIRE SIZE	C/B TRIP	CKT	CKT	C/B TRIP	WIRE SIZE	WATTS/PHASE A	B	C	DESCRIPTION
CONVENIENCE RECEPTACLES RM. 124	600			#12	20	1	2	20	#12	400			CONVENIENCE RECEPTACLES RM. 100
CONVENIENCE RECEPTACLES RM. 125		1200		#12	20	3	4	20	#12		800		CONVENIENCE RECEPTACLES RM. 100, 146
CONVENIENCE RECEPTACLES RM. 126			800	#12	20	5	6	20	#12			800	CONVENIENCE RECEPTACLES RM. 122, 129
CONVENIENCE RECEPTACLES RM. 132	1200			#12	20	7	8	20	#12	400			CONVENIENCE RECEPTACLES RM. 138
CONVENIENCE RECEPTACLES RM. 131		800		#12	20	9	10	20	#12		400		CONVENIENCE RECEPTACLES RM. 140
CONVENIENCE RECEPTACLES RM. 133			800	#12	20	11	12	20	#12			800	CONVENIENCE RECEPTACLES RM. 139
CONVENIENCE RECEPTACLES RM. 133	600			#12	20	13	14	20	#12	600			CONVENIENCE RECEPTACLES RM. 141
CONVENIENCE RECEPTACLES RM. 134		800		#12	20	15	16	20	#12		600		CONVENIENCE RECEPTACLES RM. 141
CONVENIENCE RECEPTACLES RM. 134			800	#12	20	17	18	20	#12			400	CONVENIENCE RECEPTACLES RM. 141
CONVENIENCE RECEPTACLES RM. 136	600			#12	20	19	20	20	#12	1000			CONVENIENCE RECEPTACLES RM. 145
CONVENIENCE RECEPTACLES RM. 135		600		#12	20	21	22	20	#12		600		EXTERIOR RECEPTACLES
CONVENIENCE RECEPTACLES RM. 135			600	#12	20	23	24	20	#12			600	EXTERIOR RECEPTACLES
CONVENIENCE RECEPTACLES RM. 135	600			#12	20	25	26	20	#12	800			CONVENIENCE RECEPTACLES RM. 123
TEST 2 POLE RECEPTACLE RM. 135		500		#12	20	27	28	30	#10		2500		ELECTRIC WATER HEATER
			500	#12	2P	29	30	2P	#10			2500	
TEST 3 POLE DISCONNECT RM. 135	500			#10	30	31	32	20	#12	500			O/H DOOR OPERATOR
		500		#10		33	34	20	#12		500		O/H DOOR OPERATOR
			500	#10	3P	35	36	20	#12			500	O/H DOOR OPERATOR
SPARE	1000				20	37	38	20	#12	1000			CHILLER CONTROL
SPARE		1000			20	39	40	20	#12		1000		CHILLER CONTROL
SPARE			1000		20	41	42	20	#12			1000	SPARE
CONNECTED LOAD	6100	5400	5000							4700	6400	6600	CONNECTED LOAD

PANELBOARD SCHEDULE

PANEL NO.: "LP-2" | LOCATION: SECURITY OFFICE AREA | KAIC: .

PANEL TYPE: SQ D NQOD WITH BOLT ON CIRCUIT BREAKERS | VOLTS: 208Y/120 | PHASE: 3 | WIRE: 4 | MAINS: 150A. MLO

DESCRIPTION	WATTS/PHASE A	B	C	WIRE SIZE	C/B TRIP	CKT	CKT	C/B TRIP	WIRE SIZE	WATTS/PHASE A	B	C	DESCRIPTION
CONVENIENCE RECEPTACLES RM. 102	600			#12	20	1	2	20	#12	1000			CONVENIENCE RECEPTACLES RM. 111
CONVENIENCE RECEPTACLES RM. 104		400		#12	20	3	4	20	#12		800		CONVENIENCE RECEPTACLES RM. 113
CONVENIENCE RECEPTACLES RM. 105			1000	#12	20	5	6	20	#12			800	CONVENIENCE RECEPTACLES RM. 113
CONVENIENCE RECEPTACLES RM. 106	1000			#12	20	7	8	20	#12	600			SECURITY OFFICE AREA
CONVENIENCE RECEPTACLES RM. 106		600		#12	20	9	10	20	#12		600		CONVENIENCE RECEPTACLES RM. 116
CONVENIENCE RECEPTACLES RM. 107			1000	#12	20	11	12	20	#12			400	CONVENIENCE RECEPTACLES RM. 121
CONVENIENCE RECEPTACLES RM. 108	1000			#12	20	13	14	20	#12	1000			CONVENIENCE RECEPTACLES RM. 119, 120
CONVENIENCE RECEPTACLES RM. 109		1000		#12	20	15	16	20	#12		600		CONVENIENCE RECEPTACLES RM. 119 LOCKERS
CONVENIENCE RECEPTACLES RM. 110.1			400	#12	20	17	18	20	#12			600	CONVENIENCE RECEPTACLES RM. 119 LOCKERS
CONVENIENCE RECEPTACLES RM. 110.2	600			#12	20	19	20	20	#12	600			CONVENIENCE RECEPTACLES RM. 119 LOCKERS
CONVENIENCE RECEPTACLES RM. 117		600		#12	20	21	22	20	#12		600		CONVENIENCE RECEPTACLES RM. 119 LOCKERS
CONVENIENCE RECEPTACLES RM. 117			600	#12	20	23	24	20	#12			600	CONVENIENCE RECEPTACLES RM. 119 LOCKERS
CONVENIENCE RECEPTACLES RM. 112	800			#12	20	25	26	20	#12	600			CONVENIENCE RECEPTACLES RM. 119 LOCKERS
CONVENIENCE RECEPTACLES RM. 114		800		#12	20	27	28	20	#12		600		CONVENIENCE RECEPTACLES RM. 119 LOCKERS
SPARE			1000		20	29	30	20	#12			600	CONVENIENCE RECEPTACLES RM. 119 LOCKERS
SPARE	1000				20	31	32	20	#12	600			CONVENIENCE RECEPTACLES RM. 119 LOCKERS
SPARE		1000			20	33	34	20	#12		600		CONVENIENCE RECEPTACLES RM. 120 LOCKERS
SPARE			1000		20	35	36	20	#12			400	CONVENIENCE RECEPTACLES RM. 120 LOCKERS
SPARE	1000				20	37	38	20		1000			SPARE
SPARE		1000			20	39	40	20			1000		SPARE
SPARE			1000		20	41	42	20				1000	SPARE
CONNECTED LOAD	6000	5400	6000							5400	4800	4400	CONNECTED LOAD

PANELBOARD SCHEDULE

PANEL NO.: "LP-3" | LOCATION: SECOND FLOOR CORRIDOR | KAIC: .

PANEL TYPE: SQ D NQOD WITH BOLT ON CIRCUIT BREAKERS | VOLTS: 208Y/120 | PHASE: 3 | WIRE: 4 | MAINS: 100A. MLO

DESCRIPTION	WATTS/PHASE A	B	C	WIRE SIZE	C/B TRIP	CKT	CKT	C/B TRIP	WIRE SIZE	WATTS/PHASE A	B	C	DESCRIPTION
CONVENIENCE RECEPTACLES COR. 205	800				20	1	2	20		600			CONVENIENCE RECEPTACLES RM. 223
CONVENIENCE RECEPTACLES COR. 205		800			20	3	4	20			400		CONVENIENCE RECEPTACLES RM. 218
CONVENIENCE RECEPTACLES COR. 205			800		20	5	6	20				400	CONVENIENCE RECEPTACLES RM. 217
CONVENIENCE RECEPTACLES RM. 222	400				20	7	8	20		400			CONVENIENCE RECEPTACLES RM. 204
CONVENIENCE RECEPTACLES RM. 224		600			20	9	10	20			1000		CONVENIENCE RECEPTACLES RM. 200
CONVENIENCE RECEPTACLES RM. 224			400		20	11	12	20				1000	ELECTRIC DRINKING FOUNTAIN
CONVENIENCE RECEPTACLES RM. 224	400				20	13	14	20		1000			SERVICE RECEPTACLE ON ROOF
CONVENIENCE RECEPTACLES RM. 221		800			20	15	16	20			1000		SERVICE RECEPTACLE ON ROOF
CONVENIENCE RECEPTACLES AT COOLING TOWERS			400		20	17	18	20				1000	SERVICE RECEPTACLE ON ROOF
SPARE	1000				20	19	20	20		1000			CONVENIENCE RECEPTACLES RM. 203
SPARE		1000			20	21	22	20			1000		SPARE
SPARE			1000		20	23	24	20				1000	SPARE
SPARE	1000				20	25	26	20		1000			SPARE
SPARE		1000			20	27	28	20			1000		SPARE
SPARE			1000		20	29	30	20				1000	SPARE
CONNECTED LOAD	3600	4200	3600							4000	4400	4400	CONNECTED LOAD

PANELBOARD SCHEDULE

PANEL NO.: "LP-4" | LOCATION: SECOND FLOOR MAINTENANCE OFFICE AREA | KAIC: .

PANEL TYPE: SQ D NQOD WITH BOLT ON CIRCUIT BREAKERS | VOLTS: 208Y/120 | PHASE: 3 | WIRE: 4 | MAINS: 100A. MLO

DESCRIPTION	WATTS/PHASE A	B	C	WIRE SIZE	C/B TRIP	CKT	CKT	C/B TRIP	WIRE SIZE	WATTS/PHASE A	B	C	DESCRIPTION
CONVENIENCE RECEPTACLES RM. 214	400			#12	20	1	2	20	#12	1000			REFRIGERATOR
CONVENIENCE RECEPTACLES RM. 214		400		#12	20	3	4	20	#12		1500		MICROWAVE
CONVENIENCE RECEPTACLES RM. 214			400	#12	20	5	6	20	#12			1500	MICROWAVE
CONVENIENCE RECEPTACLES RM. 214	600			#12	20	7	8	20	#12	1000			CONVENIENCE RECEPTACLES ABOVE COUNTER 211
CONVENIENCE RECEPTACLES RM. 211		600		#12	20	9	10	20	#12		1000		CONVENIENCE RECEPTACLES ABOVE COUNTER 211
CONVENIENCE RECEPTACLES RM. 212			600	#12	20	11	12	20	#12			1500	MICROWAVE
CONVENIENCE RECEPTACLES RM. 213	400			#12	20	13	14	20	#12	1000			REFRIGERATOR
CONVENIENCE RECEPTACLES RM. 210		1000		#12	20	15	16	20	#12		1500		ICE MACHINE
CONVENIENCE RECEPTACLES RM. 208			1000	#12	20	17	18	2P	#12			1500	VERIFY SIZE AND ELECTRICAL REQUIREMENTS
CONVENIENCE RECEPTACLES RM. 207	1000			#12	20	19	20	20		1000			SPARE
CONVENIENCE RECEPTACLES RM. 206		1000		#12	20	21	22	20			1000		SPARE
CONVENIENCE RECEPTACLES RM. 212			1200	#12	20	23	24	20				1000	SPARE
CONVENIENCE RECEPTACLES RM. 215	800			#12	20	25	26	20		1000			SPARE
CONVENIENCE RECEPTACLES RM. 209		400		#12	20	27	28	20			1000		SPARE
SPARE			1000		20	29	30	20				1000	SPARE
CONNECTED LOAD	3200	3400	4200							5000	6000	6500	CONNECTED LOAD

HTK ARCHITECTS PA

900 S. KANSAS AVE. TOPEKA KANSAS 66612 P. 785-266-5373

9300 W 110TH ST. STE. 150 OVERLAND PARK KANSAS 66210 P. 913-663-5373

WWW.HTKARCHITECTS.NET

LS&A Latimer Sommers & Associates, P.A.
CONSULTING ENGINEERS
3639 SW Summerfield Drive, Suite A
Topeka, Kansas 66614-3974
Telephone: (785) 233-3232
FAX: (785) 233-0647
Email: lsapa@lsapa.com
LSA PROJECT NO. 1402032

WILLIAM R. BASSETTE LICENSED 10530 KANSAS PROFESSIONAL ENGINEER

4-15-15

DATE:
- 4-15-15

REVISED DATE:
- 12-18-14
- 2-9-15
- 3-10-15
-

HTK PROJECT NUMBER:
- 1410.03

Department of Administration
Office of Facilities and
Procurement Management
800 SW Jackson, Suite 700
Topeka, Kansas 66612-1216
Phone 785-296-8899
FAX 785-296-3456

STATE OF KANSAS
STATE OF KANSAS ENERGY & SERVICE CENTER
Seventh & Van Buren Street, Topeka, Kansas
BUILDING NUMBER 17300-00038

DATE: 4-15-15 DRAWN BY: CAD CHECKED BY: WRB REV: WRB

ELECTRICAL SCHEDULES

A-012651

EP401

CONSTRUCTION DOCUMENTS

.. EP401_02.dwg 96 04/14/15 GTC 96 04/09/15 EAN

PANELBOARD SCHEDULE

PANEL NO.: "ELP-1" | LOCATION: FIRST FLOOR MAIN BOILER ROOM | KAIC: .

PANEL TYPE: SQ D NQOD WITH BOLT ON CIRCUIT BREAKERS | VOLTS: 208Y/120 | PHASE: 3 | WIRE: 4 | MAINS: 150A. MCB

DESCRIPTION	WATTS/PHASE A	WATTS/PHASE B	WATTS/PHASE C	WIRE SIZE	C/B TRIP			C/B TRIP	WIRE SIZE	WATTS/PHASE A	WATTS/PHASE B	WATTS/PHASE C	DESCRIPTION
CU-AHU-2	2160			#10	30	1	2	20	#12	1000			CONDENSER WATER CHEMICAL TREATMENT
		2160		#10	2P	3	4	20	#12		600		CHILLER ROOM RECEPTACLES
CU-CRAC-1			1700	#12	20	5	6	20	#12			600	CHILLER ROOM RECEPTACLES
	1700			#12	2P	7	8	20	#12	600			CHILLER ROOM RECEPTACLES
CU-CRAC-2		1700		#12	20	9	10	20	#12		400		EMER. RECEPTACLES RM. 141
			1700	#12	2P	11	12	20	#12			400	EMER. RECEPTACLES RM. 139, 134
BOILER ROOM CHEMICAL TREATMENT	1000			#12	20	13	14	20	#12	400			EMER. RECEPTACLES RM. 134, 135
BOILER ROOM ATC PANEL		1000		#12	20	15	16	20	#12		800		EMER. RECEPTACLES SECURITY OFFICES
WATER SOFTENER			1000	#12	20	17	18	20	#12			600	EMER. RECEPTACLES SECURITY OFFICES
BOILER ROOM DATA TRANSFER PANEL	1000			#12	20	19	20	20	#12	400			EMER. RECEPTACLES SECURITY OFFICES
BOILER ROOM CONVENIENCE RECEPTACLES		800		#12	20	21	22	20	#12		800		EMER. RECEPTACLES SECURITY OFFICES
BOILER ROOM CONVENIENCE RECEPTACLES			1000	#12	20	23	24	20	#12			800	EMER. RECEPTACLES MAINT. OFFICES
EMERGENCY RECEPTACLES ROOM 123	200			#12	20	25	26	20	#12	400			EMER. RECEPTACLES MAINT. OFFICES
EMERGENCY RECEPTACLES ROOM 125		400		#12	20	27	28	20	#12		600		EMER. RECEPTACLES MAINT. OFFICES
EMERGENCY RECEPTACLES ROOM 132			400	#12	20	29	30	20	#12			1200	ELEV. PIT DRAINAGE PUMP 1/2HP, 120 VAC
CU EEAC	1700			#12	20	31	32	20	#12	1000			ELEVATOR CAB POWER
		1700		#12	2P	33	34	20	#12		1000		EMER. RECEPT MAINT. BAT CHARGERS
TUNNEL RECEPTACLES			1000	#10	20	35	36	20	#12			1000	CHILLER CONTROL
TUNNEL RECEPTACLES	1000			#10	20	37	38	20	#12	1000			S. EXT RECEPT AND LIGHTING CONTROL
FACP		1000		#12	20	39	40	20			1000		SPARE
SPARE			1000		20	41	42	20				1000	SPARE
CONNECTED LOAD	8760	8760	7800							4800	5200	5600	CONNECTED LOAD

PANELBOARD SCHEDULE

PANEL NO.: "LP UPS-1" | LOCATION: SECOND FLOOR DATA ROOM | KAIC: .

PANEL TYPE: SQ D NQOD WITH BOLT ON CIRCUIT BREAKERS | VOLTS: 208Y/120 | PHASE: 3 | WIRE: 4 | MAINS: 100A. MLO

DESCRIPTION	WATTS/PHASE A	WATTS/PHASE B	WATTS/PHASE C	WIRE SIZE	C/B TRIP			C/B TRIP	WIRE SIZE	WATTS/PHASE A	WATTS/PHASE B	WATTS/PHASE C	DESCRIPTION
RECEPTACLE ROOM 209	1000			#12	20	1	2	20		1000			SPARE
SPARE		1000			20	3	4	20			1000		SPARE
SPARE			1000		20	5	6	20				1000	SPARE
SPARE	1000				20	7	8	20		1000			SPARE
SPARE		1000			20	9	10	20			1000		SPARE
SPARE			1000		20	11	12	20				1000	SPARE
SPARE	1000				20	13	14	20		1000			SPARE
SPARE		1000			20	15	16	20			1000		SPARE
SPARE			1000		20	17	18	20				1000	SPARE
SPARE	1000				20	19	20	20		1000			SPARE
SPARE		1000			20	21	22	20			1000		SPARE
SPARE			1000		20	23	24	20				1000	SPARE
SPARE	1000				20	25	26	20		1000			SPARE
SPARE		1000			20	27	28	20			1000		SPARE
SPARE			1000		20	29	30	20				1000	SPARE
CONNECTED LOAD	5000	5000	5000							5000	5000	5000	CONNECTED LOAD

PANELBOARD SCHEDULE

PANEL NO.: "LP UPS-2" | LOCATION: FIRST FLOOR SECURITY MONITORING ROOM | KAIC: .

PANEL TYPE: SQ D NQOD WITH BOLT ON CIRCUIT BREAKERS | VOLTS: 208Y/120 | PHASE: 3 | WIRE: 4 | MAINS: 100A. MLO

DESCRIPTION	WATTS/PHASE A	WATTS/PHASE B	WATTS/PHASE C	WIRE SIZE	C/B TRIP			C/B TRIP	WIRE SIZE	WATTS/PHASE A	WATTS/PHASE B	WATTS/PHASE C	DESCRIPTION
SPARE	1000				20	1	2	20		1000			SPARE
SPARE		1000			20	3	4	20			1000		SPARE
SPARE			1000		20	5	6	20				1000	SPARE
SPARE	1000				20	7	8	20		1000			SPARE
SPARE		1000			20	9	10	20			1000		SPARE
SPARE			1000		20	11	12	20				1000	SPARE
SPARE	1000				20	13	14	20		1000			SPARE
SPARE		1000			20	15	16	20			1000		SPARE
SPARE			1000		20	17	18	20				1000	SPARE
SPARE	1000				20	19	20	20		1000			SPARE
SPARE		1000			20	21	22	20			1000		SPARE
SPARE			1000		20	23	24	20				1000	SPARE
SPARE	1000				20	25	26	20		1000			SPARE
SPARE		1000			20	27	28	20			1000		SPARE
SPARE			1000		20	29	30	20				1000	SPARE
CONNECTED LOAD	5000	5000	5000							5000	5000	5000	CONNECTED LOAD

PANELBOARD SCHEDULE

PANEL NO.: "LP-S1" | LOCATION: FIRST FLOOR SHOP ROOM 134 | KAIC: .

PANEL TYPE: SQ D NQOD WITH BOLT ON CIRCUIT BREAKERS | VOLTS: 120/240 | PHASE: 3 | WIRE: 4 | MAINS: 150A. MCB

DESCRIPTION	WATTS/PHASE A	WATTS/PHASE B	WATTS/PHASE C	WIRE SIZE	C/B TRIP			C/B TRIP	WIRE SIZE	WATTS/PHASE A	WATTS/PHASE B	WATTS/PHASE C	DESCRIPTION
TEST CIRCUIT ROOM 135	500			#10	30	1	2	100		6000			PANEL "LP-S1A"
		500		#10		3	4				6000		
			500	#10	3P	5	6	3P				6000	
TEST CIRCUIT ROOM 135	500			#10	30	7	8	20		1000			SPARE
		500		#10	2P	9	10	20			1000		SPARE
SPARE			1000		20	11	12	20				1000	SPARE
SPARE	1000				20	13	14	20		1000			SPARE
SPARE		1000			20	15	16	20			1000		SPARE
SPARE			1000		20	17	18	20				1000	SPARE
SPARE	1000				20	19	20	20		1000			SPARE
SPARE		1000			20	21	22	20			1000		SPARE
SPARE			1000		20	23	24	20				1000	SPARE
SPARE	1000				20	25	26	20		1000			SPARE
SPARE		1000			20	27	28	20			1000		SPARE
SPARE			1000		20	29	30	20				1000	SPARE
CONNECTED LOAD	4000	4000	4000							5000	5000	5000	CONNECTED LOAD

PANELBOARD SCHEDULE

PANEL NO.: "LP-S1A" | LOCATION: FIRST FLOOR SHOP ROOM 141 | KAIC: .

PANEL TYPE: SQ D NQOD WITH BOLT ON CIRCUIT BREAKERS | VOLTS: 120/240 | PHASE: 3 | WIRE: 4 | MAINS: 100A. MLO

DESCRIPTION	WATTS/PHASE A	WATTS/PHASE B	WATTS/PHASE C	WIRE SIZE	C/B TRIP			C/B TRIP	WIRE SIZE	WATTS/PHASE A	WATTS/PHASE B	WATTS/PHASE C	DESCRIPTION
SPARE	1000				20	1	2	20		1000			SPARE
SPARE		1000			20	3	4	20			1000		SPARE
SPARE			1000		20	5	6	20				1000	SPARE
SPARE	1000				20	7	8	20		1000			SPARE
SPARE		1000			20	9	10	20			1000		SPARE
SPARE			1000		20	11	12	20				1000	SPARE
SPARE	1000				20	13	14	20		1000			SPARE
SPARE		1000			20	15	16	20			1000		SPARE
SPARE			1000		20	17	18	20				1000	SPARE
SPARE	1000				20	19	20	20		1000			SPARE
SPARE		1000			20	21	22	20			1000		SPARE
SPARE			1000		20	23	24	20				1000	SPARE
SPARE	1000				20	25	26	20		1000			SPARE
SPARE		1000			20	27	28	20			1000		SPARE
SPARE			1000		20	29	30	20				1000	SPARE
CONNECTED LOAD	5000	5000	5000							5000	5000	5000	CONNECTED LOAD

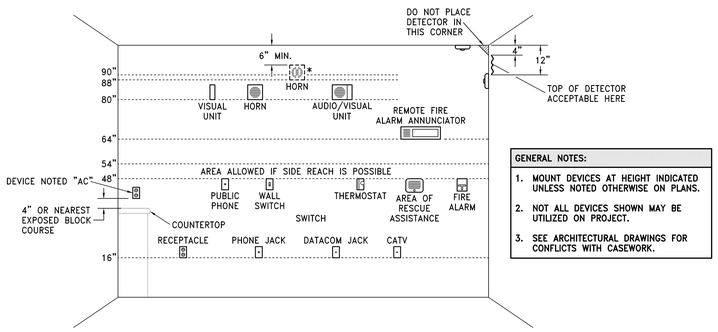

A1 Electrical Device Mounting Heights
NO SCALE

GENERAL NOTES:

1. MOUNT DEVICES AT HEIGHT INDICATED UNLESS NOTED OTHERWISE ON PLANS.
2. NOT ALL DEVICES SHOWN MAY BE UTILIZED ON PROJECT.
3. SEE ARCHITECTURAL DRAWINGS FOR CONFLICTS WITH CASEWORK.

DEVICE MOUNTING NOTES:

1. VISUAL UNIT
   DEVICE BOTTOM 80" ABOVE HIGHEST FLOOR LEVEL OR TOP 6" BELOW CEILING; WHICHEVER IS LOWER.
2. AUDIO UNIT
   DEVICE BOTTOM 80" ABOVE HIGHEST FLOOR LEVEL OR TOP 6" BELOW CEILING; WHICHEVER IS LOWER.
   * TOP OF UNIT NOT LESS THAN 90" ABOVE FLOOR AND NOT LESS THAN 6" BELOW CEILING (NFPA) (BOTTOM AT 88" WITH BLOCK COURSES). MOUNT AT NFPA HEIGHT ONLY IF REQUIRED BY LOCAL AHJ.
3. AUDIO/VISUAL UNIT
   DEVICE BOTTOM 80" ABOVE HIGHEST FLOOR LEVEL OR TOP 6" BELOW CEILING; WHICHEVER IS LOWER.
4. PULL STATION
   HIGHEST OPERABLE PART SHALL NOT BE MORE THAN 48" ABOVE THE FLOOR (FRONT APPROACH).

ELECTRICAL DEVICE MOUNTING HEIGHTS SHALL CONFORM TO THE LATEST EDITION OF THE ADA STANDARDS FOR ACCESSIBLE DESIGN.

HTK ARCHITECTS PA
9300 W 110TH ST STE 130
OVERLAND PARK KANSAS 66210
P: 913 663 5373
WWW.HTKARCHITECTS.NET

LS&A Latimer Sommers & Associates, P.A.
CONSULTING ENGINEERS
3639 SW Summerfield Drive, Suite A
Topeka, Kansas 66614-3974
Telephone: (785) 233-3232
FAX: (785) 233-0647
Email: lsapa@lsapa.com
LSA PROJECT NO. 1402032

WILLIAM R. BASSETT LICENSED PROFESSIONAL ENGINEER 10530 4-15-15

DATE:
- 4-15-15

REVISED DATE:
- 1-218-14
- 2-9-15
- 3-10-15

HTK PROJECT NUMBER:
- 1410.03

Department of Administration
Office of Facilities and
Procurement Management
800 SW Jackson, Suite 700
Topeka, Kansas 66612-1216
Phone 785-296-8899
FAX 785-296-3456

STATE OF KANSAS
STATE OF KANSAS ENERGY & SERVICE CENTER
Seventh & Van Buren Street, Topeka, Kansas
BUILDING NUMBER 17300-00038
DATE: 4-15-15 | DRAWN BY: CAD | CHECKED BY: WRB | REV: WRB

ELECTRICAL DETAIL AND SCHEDULES

A-012651

EP402

CONSTRUCTION DOCUMENTS

JCSBC
2-2-2016
AIL9G--0105

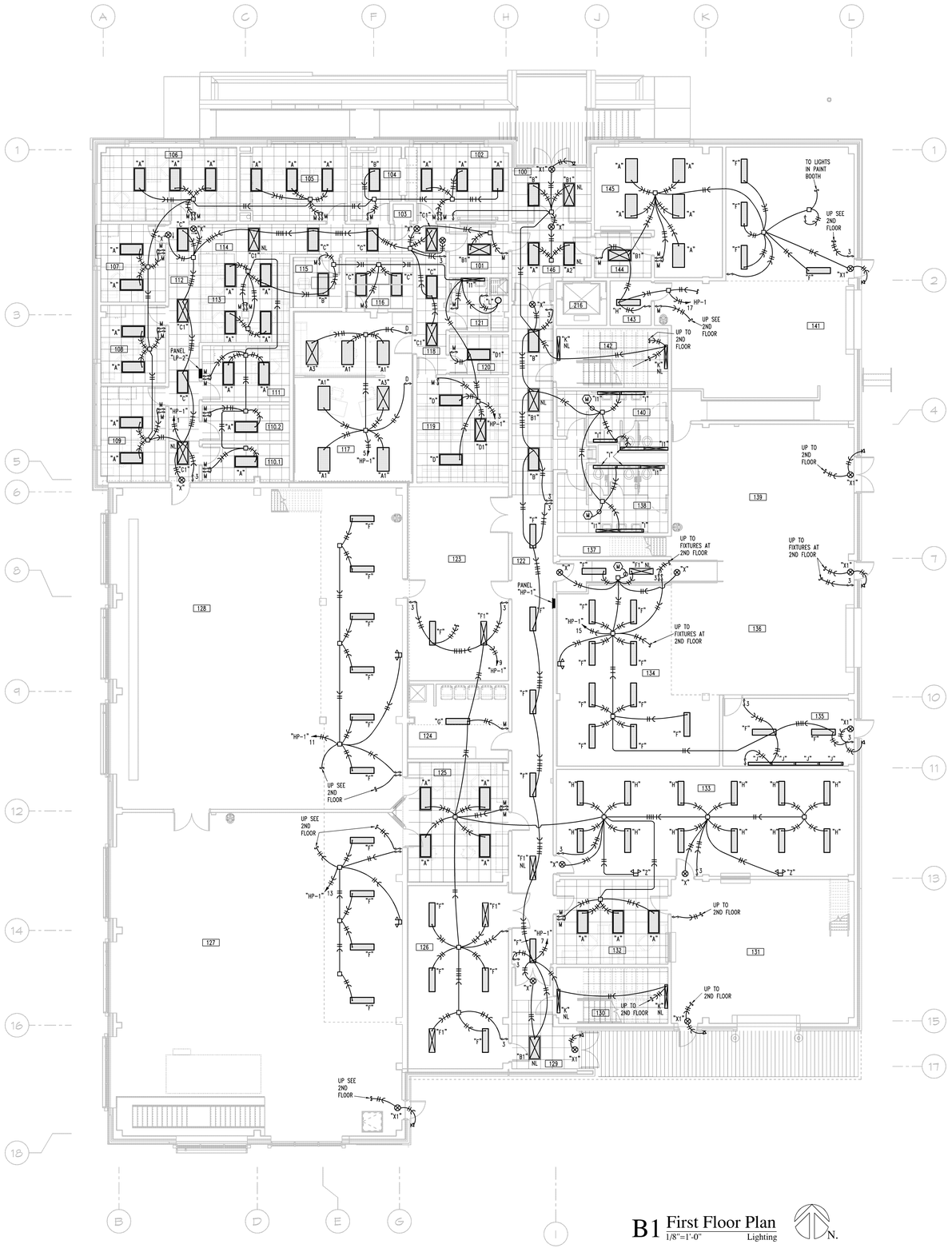

B1 First Floor Plan
1/8"=1'-0" Lighting

N.

LIGHT FIXTURE SCHEDULE												
MARK	MANUFACTURER	MODEL NUMBER	MOUNTING			FINISH	LAMPS					REMARKS
			LAY-IN	SUSPENDED	WALL		LED	FLUOR.	HID.	VOLTAGE	WATTS	
"A"	WILLIAMS	DIG-S24-LED*PH75/840-AD-ED*PH	X			WHITE	X			277	80	2, 3
"A1"	WILLIAMS	DIG-S24-LED*PH75/840-AD-EDD*PH	X			WHITE	X			277	80	3
"A2"	WILLIAMS	DIG-S24-LED*PH75/840-AD-EP-PH-EM-BSL-310	X			WHITE	X			277	80	
"A3"	WILLIAMS	DIG-S24-LED*PH75/840-AD-EDD*PH-EM-BSL-310	X			WHITE	X			277	80	5
"B"	WILLIAMS	DIG-S24-LED*PH60/840-AD-ED*PH	X			WHITE	X			277	62	–
"B1"	WILLIAMS	DIG-S24-LED*PH60/840-AD-ED*PH-EM-BSL-310	X							277	62	5
"C"	WILLIAMS	DIG-S24-LED*PH50/840-AD-ED*PH	X			WHITE	X			277	50	–
"C1"	WILLIAMS	DIG-S24-LED*PH50/840-AD-ED*PH-EM-BSL-310								277	50	5
"D"	WILLIAMS	DIG-S24-LED*PH40/840-AD-ED*PH	X			WHITE	X			277	42	–
"D1"	WILLIAMS	DIG-S24-LED*PH40/840-AD-ED*PH-EM-BSC-310								277	42	5
"F"	COOPER	4WNLED-LD1-70-F-UNV-L840		X		WHITE	X			277	80	1
"F1"	COOPER	4WNLED-LD1-70-F-UNV-L840-EM								277	80	5
"G"	COOPER	4WNLED-LD1-54-F-UNV-L840		X		WHITE	X			277	60	1
"H"	COOPER	4WNLED-LD1-41-F-UNV-L840		X		WHITE	X			277	50	1
"I"	WILLIAMS	LL6G-4-LED*PH34/840-F116S/MWA-ED*PH	X			WHITE	X			277	45	–
"I1"	WILLIAMS	LL6G-4-LED*PH34/840-F116S/MWA-EP*PH-EM-BSC-310								277		5
"J"	COOPER	S23-D-W-1L40-SR-4-1-S1-S935-S			X	SILVER	X			277	45	–
"K"	WILLIAMS	SLF-4-LED*PH75/840-HIA-ED*PH-EM-BSC-310			X	SILVER	X			277	80	–
"L"	WILLIAMS	LEDSL60-PH20/840-EDD*PH-120		RECESSED		WHITE	X			277	30	–
"M"	WILLIAMS	SLF-4-LED*PH75/840-HIA			X	WHITE	X			277	80	
"M1"	WILLIAMS	SLF-4-LED*PH75/840-HIA-EM-BSC-310			X	WHITE	X			277	80	5
"N"	RAB LIGHTING	VXBR-LED-B-DG			X	NATURAL ALUMINUM	X			277		
"X"	DUAL LITE	EVEU-R-W-E-I-EMERGENCY EXIT LIGHT			X	WHITE	X			277		5
"X1"	DUAL LITE	EVC-U-R-W-D4-I-EMERGENCY EXIT LIGHT WITH REMOTE OUTDOOR HEAD			X	WHITE	X			277		4, 5
"Z"	DUAL LITE	AS-80-6V-I-WB6 EMERGENCY LIGHTING UNIT			X	BLACK				277		5

REMARKS LEGEND:

1 – FOR HIGH CEILING AREAS MOUNT FIXTURE AT 25'-0" A.F.F., FOR LOWER CEILING MOUNT FIXTURE AT 12'-0" A.F.F.
2 – PROVIDE DUAL LEVEL SWITCHING OPTION.
3 – PROVIDE WITH DIMMING DRIVER.
4 – PROVIDE REMOTE EMERGENCY LIGHTING UNIT.
5 – PROVIDE EMERGENCY LIGHTING FEATURE.

HTK ARCHITECTS PA
9200 W. 110TH ST. STE. 150
OVERLAND PARK, KANSAS 66210
P: 913.663.5373
9105 KANSAS AVE.
TOPEKA, KANSAS 66612
P: 785.266.5373
WWW.HTKARCHITECTS.NET

LS&A Latimer Sommers & Associates, P.A.
CONSULTING ENGINEERS
3639 SW Summerfield Drive, Suite A
Topeka, Kansas 66614-3974
Telephone: (785) 233-3232
FAX: (785) 233-0547
Email: lsapa@lsapa.com
LSA PROJECT NO. 1402032

WILLIAM R. BASSETT
LICENSED
10530
PROFESSIONAL ENGINEER
4-15-15

DATE:
- 4-15-15

REVISED DATE:
- 12-18-14
- 2-9-15
- 3-10-15
-

HTK PROJECT NUMBER:
- 1410.03

Department of Administration
Division of Facilities and
Office of Facilities and
Procurement Management
800 SW Jackson, Suite 700
Topeka, Kansas 66612-1216
Phone 785-296-8899
FAX 785-296-3456

STATE OF KANSAS
STATE OF KANSAS ENERGY & SERVICE CENTER
Seventh & Van Buren Street, Topeka, Kansas
BUILDING NUMBER 17300-00038

DATE: 4-15-15 DRAWN BY: CAD CHECKED BY: WRB REV: WRB

FIRST FLOOR PLAN - LIGHTING

A-012651

EL101

CONSTRUCTION DOCUMENTS

EL101.dwg 04/15/15 DTC

JCSBC
2-2-2016
AtL9G.-0106

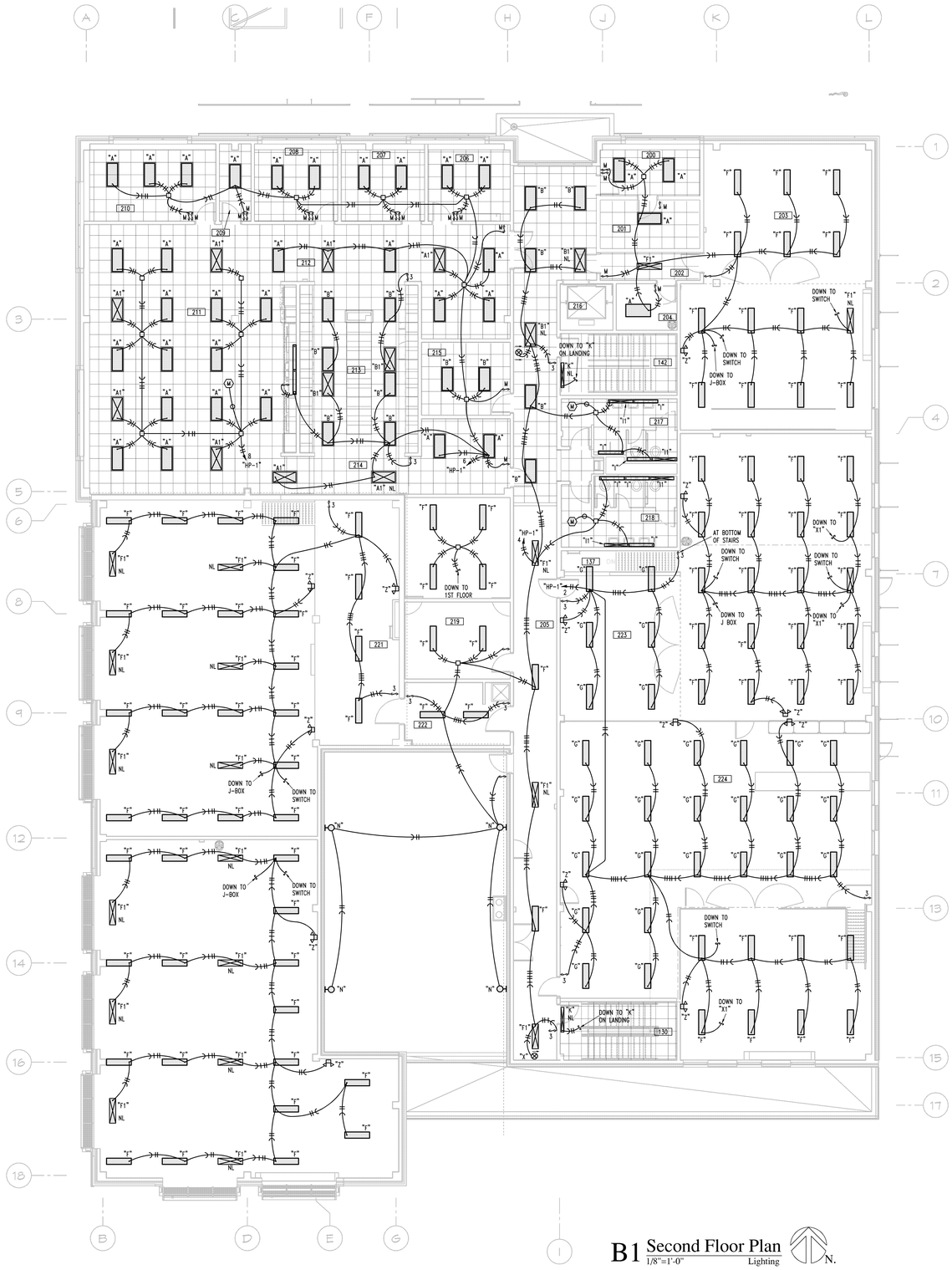

B1 Second Floor Plan
1/8"=1'-0" Lighting

N.

HTK ARCHITECTS PA
900 S. KANSAS AVE. TOPEKA, KANSAS 66612 P. 785.266.5373
9300 W. 110TH ST. STE. 150 OVERLAND PARK KANSAS 66210 P. 913.663.5373
WWW.HTKARCHITECTS.NET

LS&A Latimer Sommers & Associates, P.A.
CONSULTING ENGINEERS
3639 SW Summerfield Drive, Suite A
Topeka, Kansas 66614-3974
Telephone: (785) 233-3232
FAX: (785) 233-0647
Email: lsapa@lsapa.com
LSA PROJECT NO. 1402032

WILLIAM R. BASSETT LICENSED 10530 PROFESSIONAL ENGINEER
4-15-15

DATE:
- 4-15-15

REVISED DATE:
- 12-18-14
- 2-9-15
- 3-10-15

HTK PROJECT NUMBER:
- 1410.03

Department of Administration
Office of Facilities and
Procurement Management
800 SW Jackson, Suite 700
Topeka, Kansas 66612-1216
Phone 785-296-8899
FAX 785-296-3456

STATE OF KANSAS
STATE OF KANSAS ENERGY & SERVICE CENTER
Seventh & Van Buren Street, Topeka, Kansas
BUILDING NUMBER 17300-00038

DATE: 4-15-15 DRAWN BY: CAD CHECKED BY: WRB REV: WRB

SECOND FLOOR PLAN - LIGHTING

A-012651

EL102

CONSTRUCTION DOCUMENTS

JCSBC
2-2-2016
Att.9G.--0107

... EL102.dwg 96 04/15/15 CTC

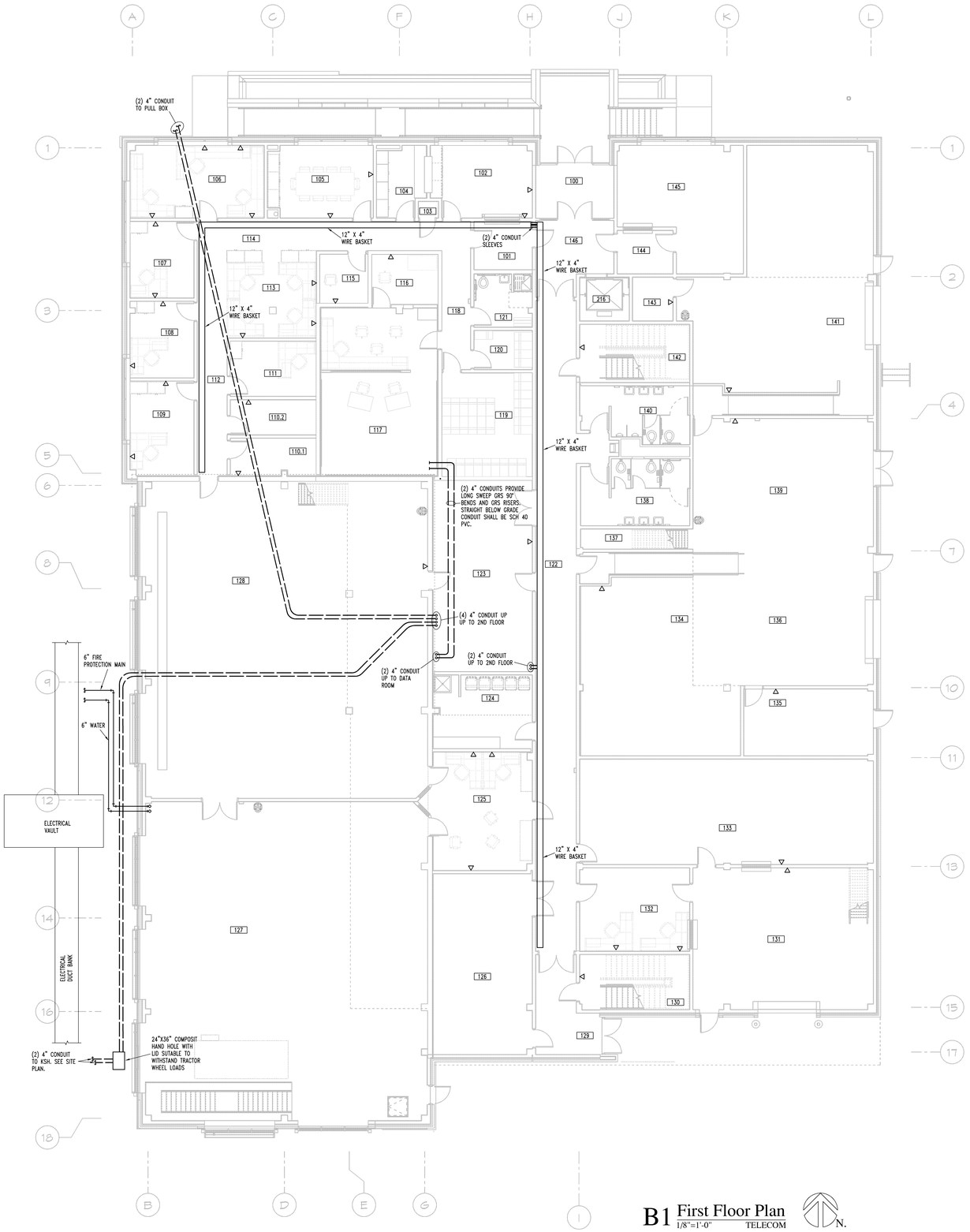

B1 First Floor Plan
1/8"=1'-0" TELECOM

N.

HTK ARCHITECTS PA
900 S. KANSAS AVE. TOPEKA KANSAS 66612 P: 785-266-5373
9300 W 110TH ST. STE. 150 OVERLAND PARK KANSAS 66210 P: 913-663-5373
WWW.HTKARCHITECTS.NET

LS&A Latimer Sommers & Associates, P.A.
CONSULTING ENGINEERS
3639 SW Summerfield Drive, Suite A
Topeka, Kansas 66614-3974
Telephone: (785) 233-3232
FAX: (785) 233-0647
Email: lsapa@lsapa.com
LSA PROJECT NO. 1402032

WILLIAM R. BASSETTE LICENSED 10530 PROFESSIONAL ENGINEER
4-15-15

DATE:
- 4-15-15

REVISED DATE:
- 12-18-14
- 2-9-15
- 3-10-15

HTK PROJECT NUMBER:
- 1410.03

Department of Administration
Office of Facilities and
Procurement Management
800 SW Jackson, Suite 700
Topeka, Kansas 66612-1216
Phone 785-296-8899
FAX 785-296-3456

STATE OF KANSAS
STATE OF KANSAS ENERGY & SERVICE CENTER
Seventh & Van Buren Street, Topeka, Kansas
BUILDING NUMBER 17300-00038

DATE: 4-15-15 DRAWN BY: CAD CHECKED BY: WRB REV: WRB

FIRST FLOOR PLAN - TELECOM

A-012651

ET101

CONSTRUCTION DOCUMENTS

JCSBC
2-2-2016
Att.9G.--0108

ET101.dwg 96 04/14/15 GTC

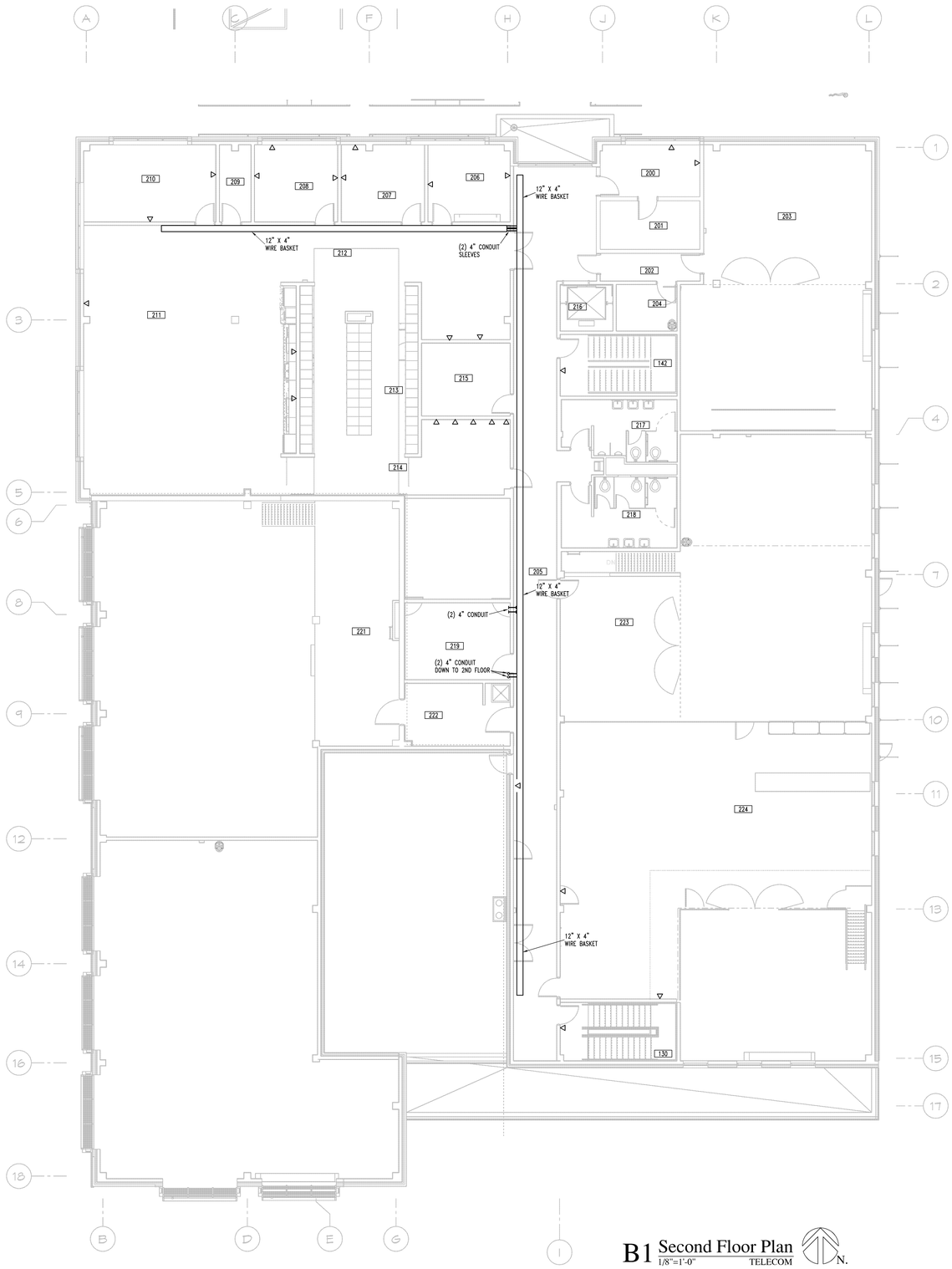

B1 Second Floor Plan
1/8"=1'-0" TELECOM

N.

HTK ARCHITECTS PA
900 S. KANSAS AVE. TOPEKA KANSAS 66612 P. 785-266-5373
9300 W 110TH ST STE 150 OVERLAND PARK KANSAS 66210 P. 913-663-5373
WWW.HTKARCHITECTS.NET

LS&A Latimer Sommers & Associates, P.A.
CONSULTING ENGINEERS
3639 SW Summerfield Drive, Suite A
Topeka, Kansas 66614-3974
Telephone: (785) 233-3232
FAX: (785) 233-0647
Email: lsapa@lsapa.com
LSA PROJECT NO. 1402032

WILLIAM R. BASSETT LICENSED 10530 KANSAS ENGINEER
4-15-15

DATE:
- 4-15-15

REVISED DATE:
- 12-18-14
- 2-9-15
- 3-10-15

HTK PROJECT NUMBER:
- 1410.03

Department of Administration
Office of Facilities and
Procurement Management
800 SW Jackson, Suite 700
Topeka, Kansas 66612-1216
Phone 785-296-8899
FAX 785-296-3456

STATE OF KANSAS
STATE OF KANSAS ENERGY & SERVICE CENTER
Seventh & Van Buren Street, Topeka, Kansas
BUILDING NUMBER 17300-00038

DATE: 4-15-15 DRAWN BY: CAD CHECKED BY: WRB REV: WRB

SECOND FLOOR PLAN - TELECOM

A-012651

ET102

CONSTRUCTION DOCUMENTS

JCSBC
2-2-2016
Att.9G.--0109

... ET102.dwg 96 04/14/15 GTC

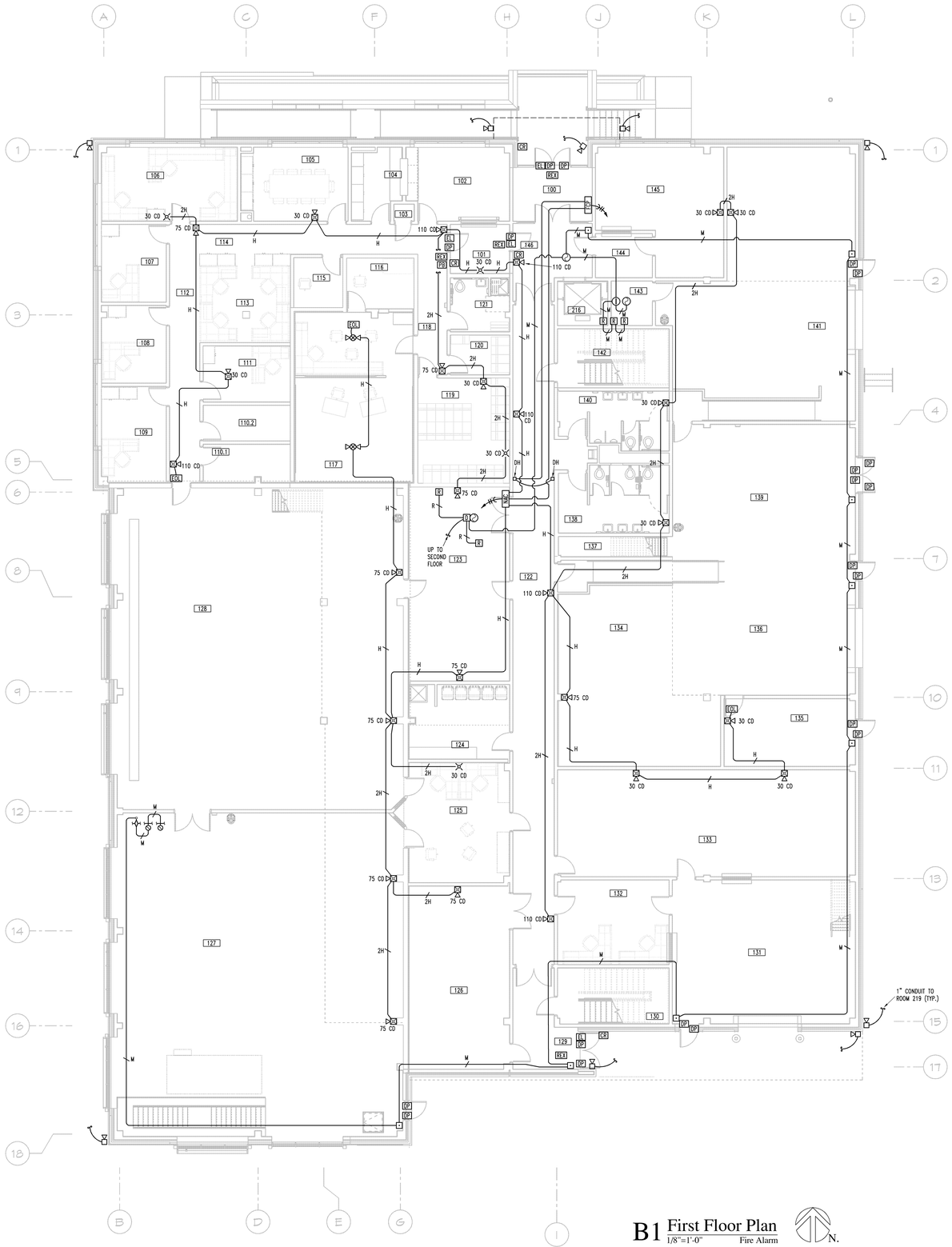

B1 First Floor Plan
1/8"=1'-0" Fire Alarm

N.

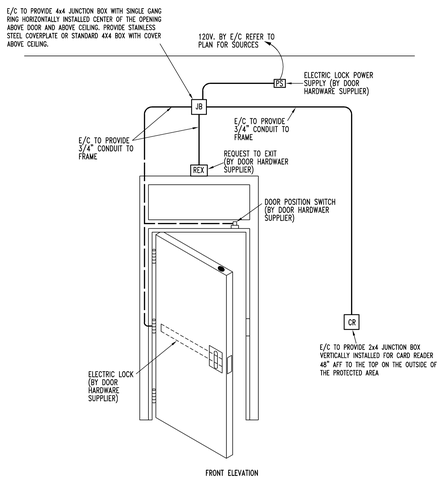

A2 Typical Access Control Door Detail
No Scale Single Door Entry

GENERAL NOTES:

1. CONTRACTOR SHALL VERIFY ALL LOCATIONS, HARDWARE, CABLING AND ROUGH-INS WITH OWNER, ELECTRICIAN AND DOOR HARDWARE MANUFACTURER FOR PROPER COORDINATION.

HTK ARCHITECTS PA
900 S. KANSAS AVE. TOPEKA KANSAS 66612 P. 785-266-5373
9300 W 110TH ST. STE. 150 OVERLAND PARK KANSAS 66210 P. 913-663-5373
WWW.HTKARCHITECTS.NET

LS&A Latimer Sommers & Associates, P.A.
CONSULTING ENGINEERS
3639 SW Summerfield Drive, Suite A
Topeka, Kansas 66614-3974
Telephone: (785) 233-3232
FAX: (785) 233-0647
Email: lsapa@lsapa.com
LSA PROJECT NO. 1402032

WILLIAM R. BASSETT LICENSED 10530 PROFESSIONAL ENGINEER
4-15-15

DATE:
- 4-15-15

REVISED DATE:
- 12-18-14
- 2-9-15
- 3-10-15

HTK PROJECT NUMBER:
- 1410.03

Department of Administration
Office of Facilities and Procurement Management
800 SW Jackson, Suite 700
Topeka, Kansas 66612-1216
Phone 785-296-8899
FAX 785-296-3456

STATE OF KANSAS
STATE OF KANSAS ENERGY & SERVICE CENTER
Seventh & Van Buren Street, Topeka, Kansas
BUILDING NUMBER 17300-00038

DATE: 4-15-15 DRAWN BY: CAD CHECKED BY: WRB REV: WRB

FIRST FLOOR PLAN - FIRE ALARM

A-012651

EY101

CONSTRUCTION DOCUMENTS

JCSBC
2-2-2016
Att.9G.--0110

... EY101.dwg 96 04/14/15 GTC

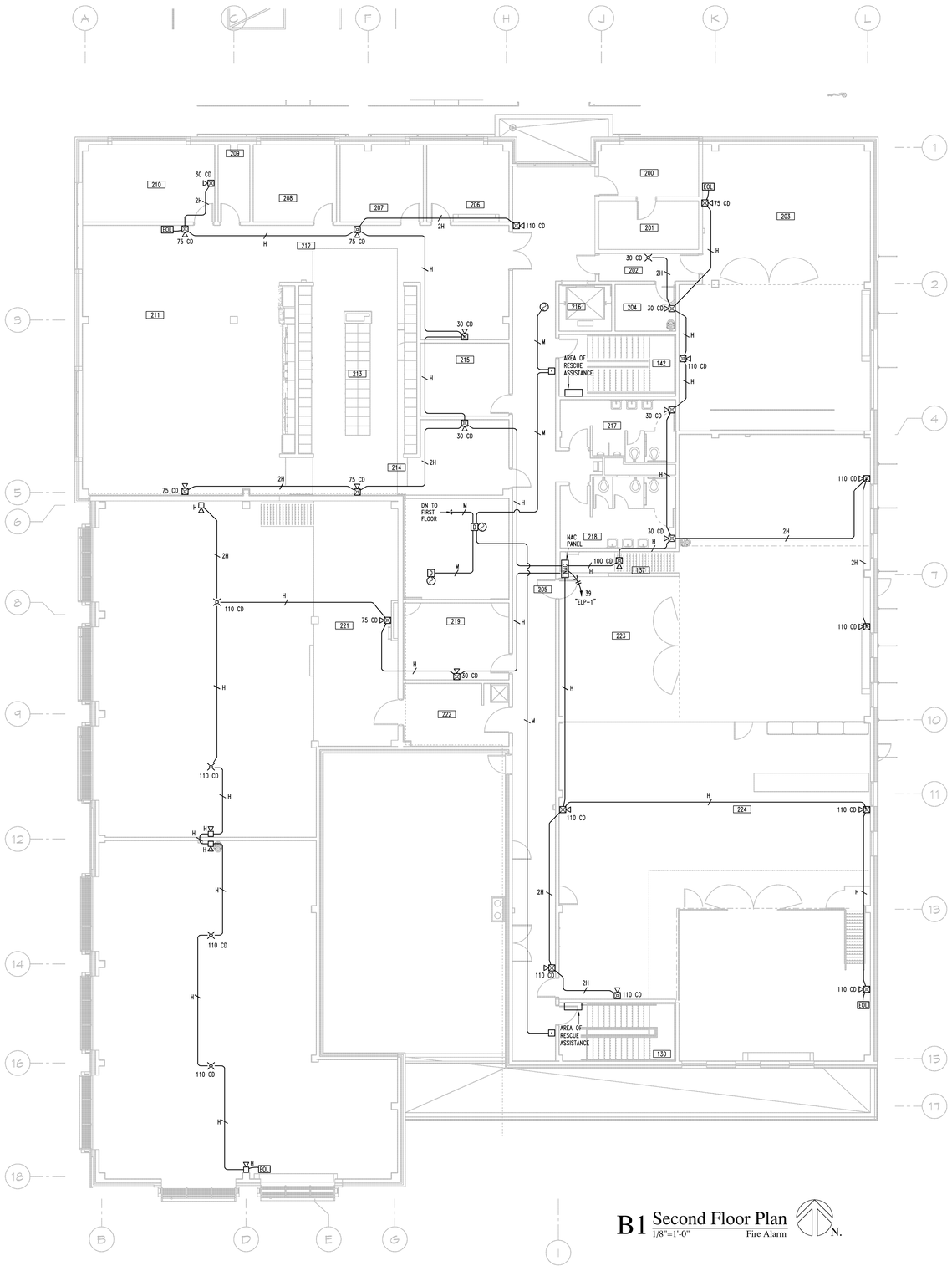

HTK ARCHITECTS PA
9300 W. 110TH ST. STE. 130
OVERLAND PARK, KANSAS 66210
P: 913.663.5373
3905 KANSAS AVE.
TOPEKA, KANSAS 66612
P: 785.266.5373
WWW.HTKARCHITECTS.NET

LS&A
Latimer Sommers & Associates, P.A.
CONSULTING ENGINEERS
3639 SW Summerfield Drive, Suite A
Topeka, Kansas 66614-3974
Telephone: (785) 233-3232
FAX: (785) 233-0647
Email: lsapa@lsapa.com
LSA PROJECT NO. 1402032

WILLIAM R. BASSETT
LICENSED
10530
PROFESSIONAL ENGINEER
4-15-15

DATE:
- 4-15-15

REVISED DATE:
- 12-18-14
- 2-9-15
- 3-10-15

HTK PROJECT NUMBER:
- 1410.03

Department of Administration
Office of Facilities and
Procurement Management
800 SW Jackson, Suite 700
Topeka, Kansas 66612-1216
Phone 785-296-8899
FAX 785-296-3456

STATE OF KANSAS
STATE OF KANSAS ENERGY & SERVICE CENTER
Seventh & Van Buren Street, Topeka, Kansas
BUILDING NUMBER 1730000038

DATE: 4-15-15 | DRAWN BY: CAD | CHECKED BY: WRB | REV: WRB

SECOND FLOOR
PLAN - FIRE ALARM

A-012651

EY102

CONSTRUCTION
DOCUMENTS

-- EY102.dwg 04/14/15 GTC

JCSBC
2-2-2016
Att.9G.--0111

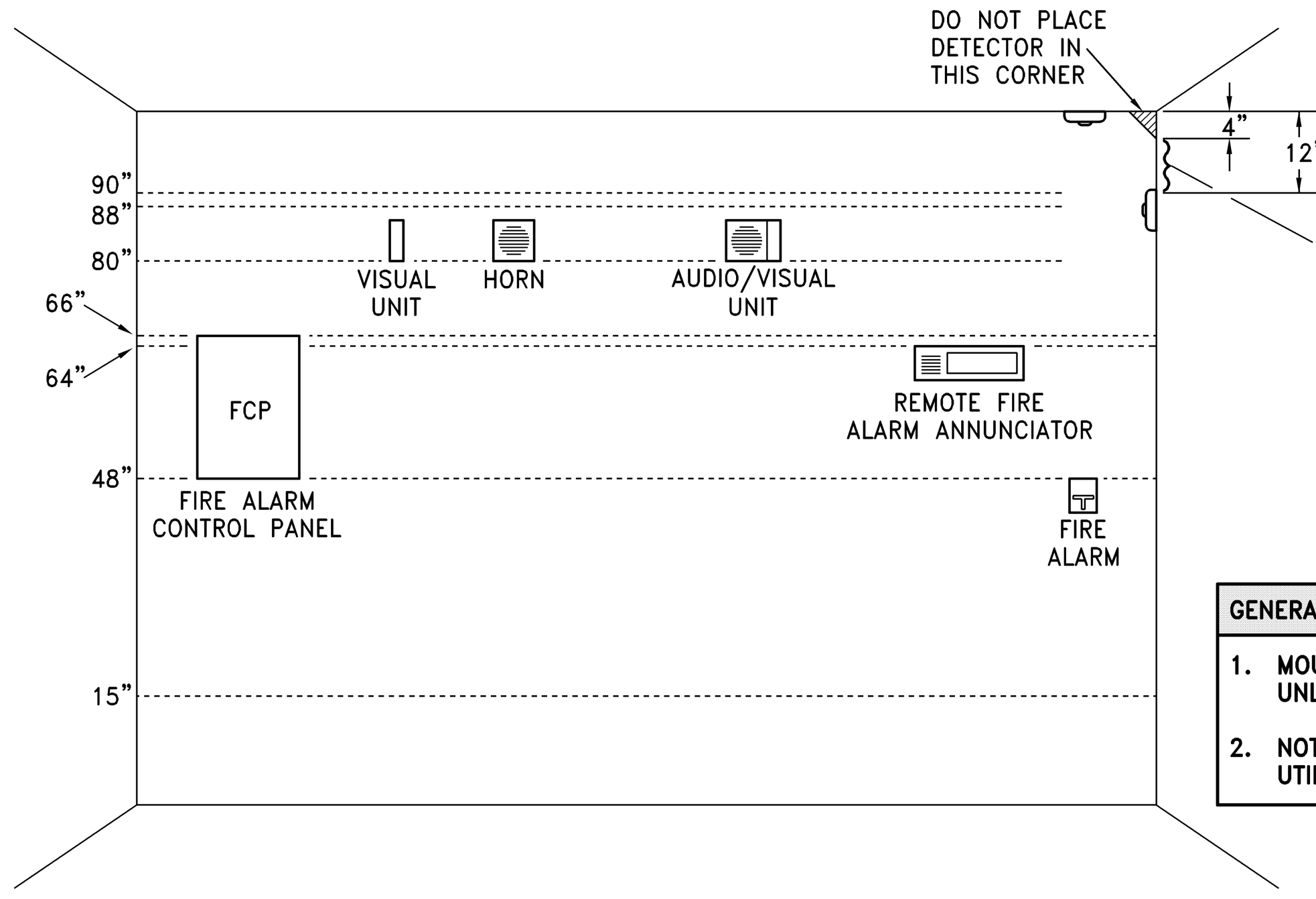

GENERAL NOTES:
1. MOUNT DEVICES AT HEIGHT INDICATED UNLESS NOTED OTHERWISE ON PLANS.
2. NOT ALL DEVICES SHOWN MAY BE UTILIZED ON PROJECT.

DEVICE MOUNTING NOTES:
1. VISUAL UNIT DEVICE BOTTOM 80" ABOVE HIGHEST FLOOR LEVEL OR TOP 6" BELOW CEILING; WHICHEVER IS LOWER, OR ON CEILING.
2. AUDIO UNIT DEVICE BOTTOM 80" ABOVE HIGHEST FLOOR LEVEL OR TOP 6" BELOW CEILING; WHICHEVER IS LOWER.
3. AUDIO/VISUAL UNIT DEVICE BOTTOM 80" ABOVE HIGHEST FLOOR LEVEL OR TOP 6" BELOW CEILING; WHICHEVER IS LOWER, OR ON CEILING.
4. PULL STATION HIGHEST OPERABLE PART SHALL NOT BE MORE THAN 48" ABOVE THE FLOOR.

C4 Electrical Device Mounting Heights

1/8"=1'-0"

FIRE ALARM WIRE LIST	
H	AUDIBLE AND VISUAL CIRCUIT – 2 CONDUCTOR 14 AWG SOLID NON-PLENUM RATER: FPLR; BELDEN 5120UL; AREA=0.0356 SQ. INCH. CONDUIT ONLY: THHN; (2) #14 AWG (RED/BLACK); AREA=0.0097 SQ. INCH (EACH)
K	REMOTE TEXT SWITCH/LED CIRCUIT – (2) 2 CONDUCTOR 18 AWG SOLID NON-PLENUM RATED: FPLR; BELDEN 5320UL; AREA = 0.0179 SQ. INCH CONDUIT ONLY: THHN; (2) #8 AWG (PINK/BROWN) (2) #18 AWG (WHITE/ORANGE) AREA = 0.0055 SQ. INCH (EACH)
M	SLC CIRCUIT – 1 PAIR 16 AWG SOLID UNSHIELDED. NON-PLENUM RATED: FPLR; BELDEN 5320UL AREA = 0.0179 SQ. INCH. CONDUIT ONLY: TFFN; (2) #16 AWG (YELLOW/BLUE); AREA=0.0055 SQ. INCH (EACH)
P	SLC POWER CIRCUIT – 2 CONDUCTOR 14 AWG SOLID NON-PLENUM RATED: FPLR; BELDEN 5120UL; AREA = 0.0356 SQ. INCH CONDUIT ONLY: THHN; (2) #14 AWG (YELLOW/BLUE); AREA=0.0097 SQ. INCH (EACH)
R	RELAY CIRCUIT – 2 CONDUCTOR 14 AWG SOLID NON-PLENUM RATED: FPLR; BELDEN 5120UL; AREA = 0.0356 SQ. INCH CONDUIT ONLY: THHN; (2) #14 AWG (YELLOW/BLUE); AREA=0.0097 SQ. INCH (EACH)
C	ANNUNCIATOR COMMUNICATION – 2 CONDUCTOR 16 TWISTED AND SHIELDED NON-PLENUM RATED: FPLR; BELDEN 5200FE; DIAMETER: 0.184 INCH; AREA = 0.0266 SQ. INCH

CONDUIT SIZE	CONDUCTOR AREA	CONDUIT SIZE	CONDUCTOR AREA
1/2"	0.12 SQ INCH.*	1 1/4"	0.60 SQ INCH.*
3/4"	0.21 SQ INCH.*	1 1/2"	0.82 SQ INCH.*
1"	0.34 SQ INCH.*	2"	1.34 SQ INCH.*

* 40% FILL PER N.E.C.

THE CABLE SPECIFIED HERE ARE FOR REFERENCE OF REQUIRED ELECTRICAL CHARACTERISTICS AS WELL AS CODE REQUIREMENTS. ALTERNATE SUPPLIERS MAY BE SUBSTITUTED PROVIDED EQUIVALENT CHARACTERISTICS ARE MAINTAINED. ITEMS SUCH AS CAPACITANCE BETWEEN CONDUCTORS AND WIRE GAUGE CAN BE CRUCIAL TO BE CIRCUIT DESIGN OF THIS SYSTEM INSTALLATION.

NOTE: EQUIVALENT CABLES BY WEST PENN. ALL CONDUCTORS AND CABLES SHALL BE IN CONDUIT.

Symbol	NFPA SYMBOLS LEGEND	MANUFACTURER	MODEL NUMBER
	SMOKE DETECTOR	NOTIFIER	FSP-851
	HEAT DETECTOR	NOTIFIER	FSP-851
R	DUCT DETECTOR	NOTIFIER	DNR & FCM-1 & R10E
	ADDRESSABLE MANUAL PULL STATION	NOTIFIER	NBG-12LX
B	BEAM DETECTOR (TRANSMITTER OR RECEIVER)	BOSCH	D296 & FMM-101
	WATERFLOW SWITCH	NOTIFIER	FMM-101
	TAMPER SWITCH ON VALVE	NOTIFIER	FMM-101
LPS	LOW AIR PRESSURE SWITCH	NOTIFIER	FMM-101
15	A/V (WALL MOUNTED) 24 VDC 15 CANDELA	NOTIFIER	P2R
H	FIRE ALARM HORN	NOTIFIER	
110	A/V (CEILING MOUNTED) 24 VDC 110 CANDELA	NOTIFIER	PC2R
30	STROBE 24 VDC 30 CANDELA, ADDRESS: "V1-3"	NOTIFIER	SR
FCP	FIRE ALARM CONTROL PANEL	NOTIFIER	NFS-320 OR NFS-640
FAA	FIRE ALARM ANNUNCIATOR	NOTIFIER	FDU-80
IAM R	RELAY IAM	NOTIFIER	FRM-1
EOL	END OF LINE RESISTOR		
T	TAMPER SWITCH		
TS	KEYED TEST SWITCH	NOTIFIER	RTS151KEX
I	ADDRESSABLE INPUT MODULE	NOTIFIER	
R	ADDRESSABLE RELAY – EITHER CONTROL OR MONITOR	NOTIFIER	
DH	DOOR HOLD OPEN DEVICE	NOTIFIER	

* ALL SYMBOLS SHOWN ABOVE MAY NOT APPEAR ON PLANS

NOTE: REFER TO DEVICE MOUNTING HEIGHT DETAIL FOR MOUNTING REQUIREMENTS.

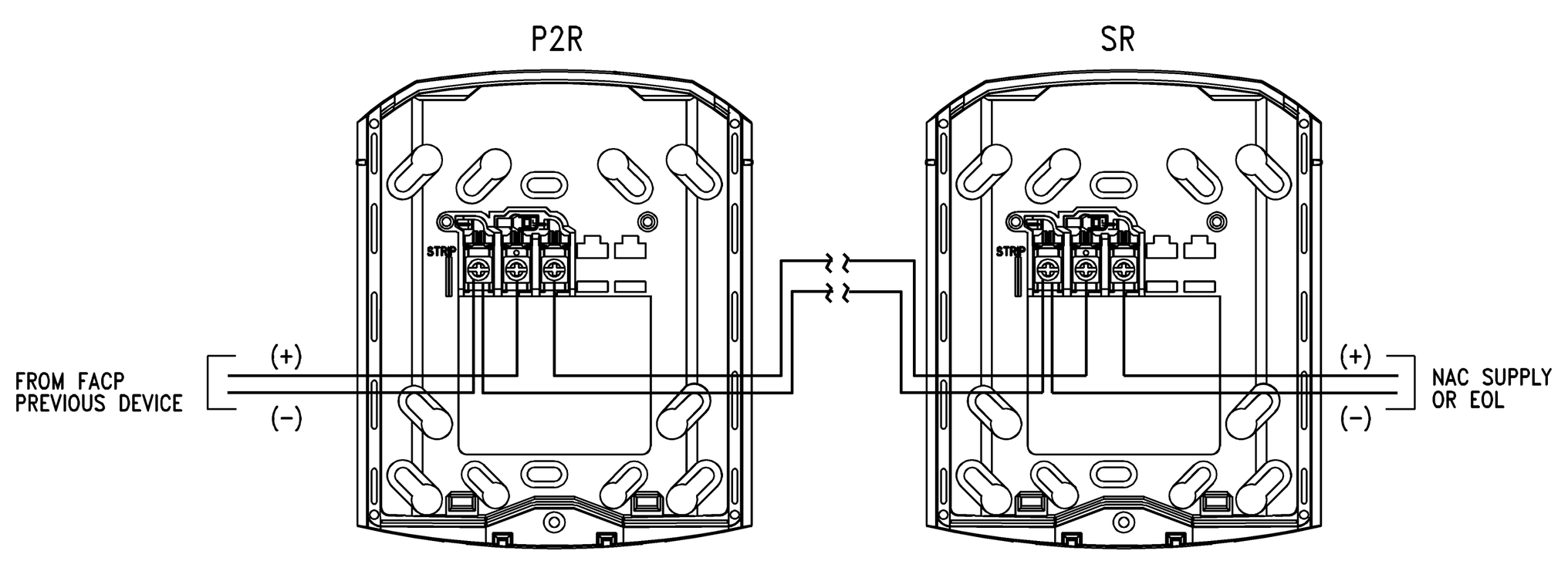

NOTIFICATION CIRCUIT WIRING DETAIL

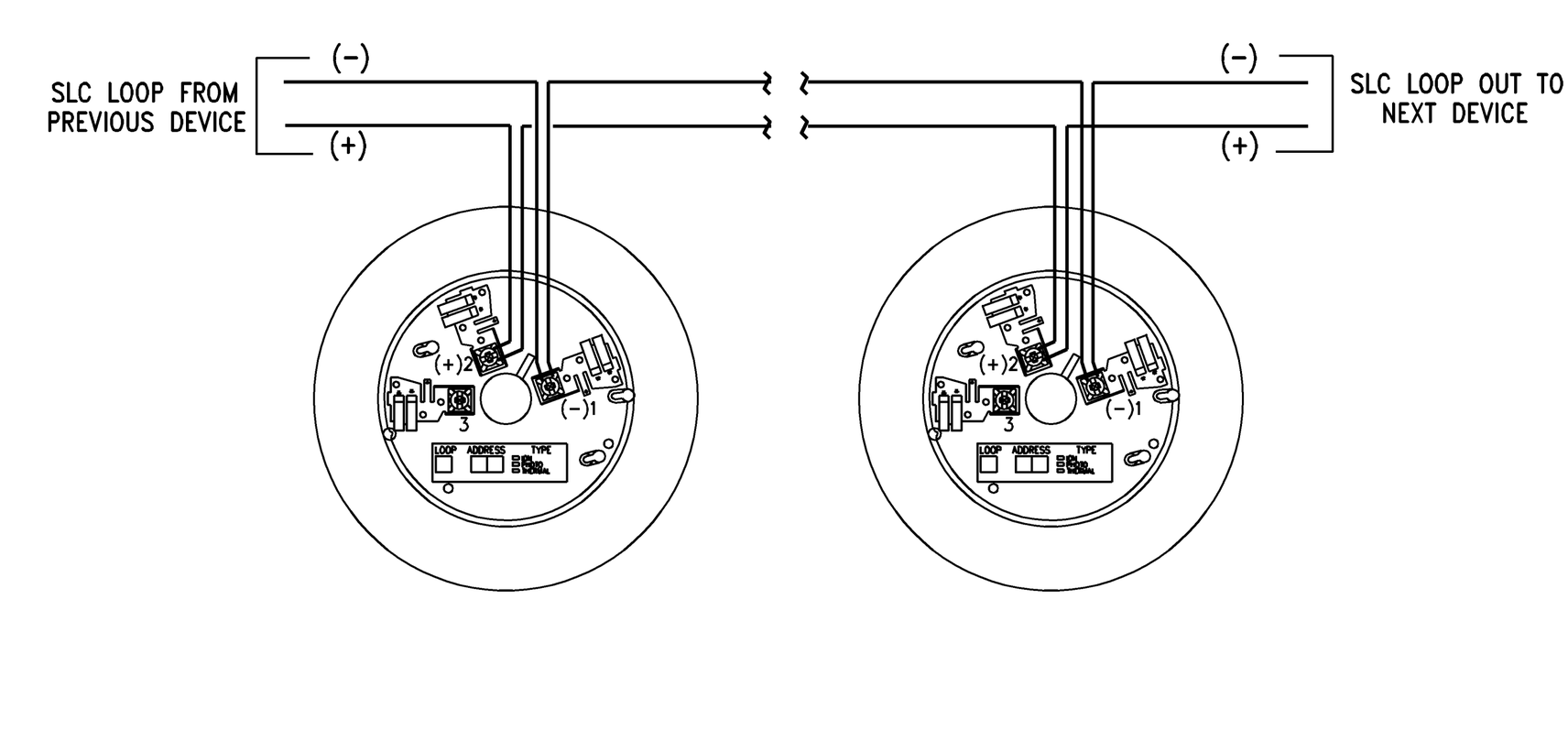

FSP-851 OR FST-851

Matrix column headings:
ACTUATE COMMON VISUAL ALARM SIGNAL INDICATOR AT FCP
ACTUATE COMMON VISUAL SUPERVISORY SIGNAL AT FCP
ACTUATE COMMON VISUAL TROUBLE SIGNAL AT FCP
ACTUATE AUDIBLE COMMON TROUBLE SIGNAL AT FCP
ACTUATE VISUAL APPLIANCES
TRANSMIT ALARM SIGNAL TO NETWORK WORKSTATIONS
TRANSMIT SUPERVISORY SIGNAL TO NETWORK WORKSTATIONS
TRANSMIT TROUBLE SIGNAL TO NETWORK WORKSTATIONS
SHUT DOWN ALL AHU'S
SHUT DOWN ASSOCIATED AHU

● PERFORM OPERATION/REPORT DEVICE STATUS

FIRE ALARM SYSTEM INPUT/OUTPUT MATRIX	A	B	C	D	E	F	G	H	I	J	K	L
SYSTEM – INPUTS												
MANUAL PULL STATION	●	●					●	●			●	
SMOKE DETECTOR	●	●					●	●			●	
HEAT DETECTOR	●	●					●	●			●	
DUCT DETECTOR			●	●					●			●
SPRINKLER SYSTEM FLOOR	●	●					●	●			●	
SPRINKLER SYSTEM TAMPER					●	●				●		
FIRE ALARM AC POWER FAILURE					●	●				●		
FIRE ALARM SYSTEM LOW BATTERY					●	●				●		
OPEN CIRCUIT					●	●				●		
GROUND CIRCUIT					●	●				●		
SHORT CIRCUIT					●	●				●		

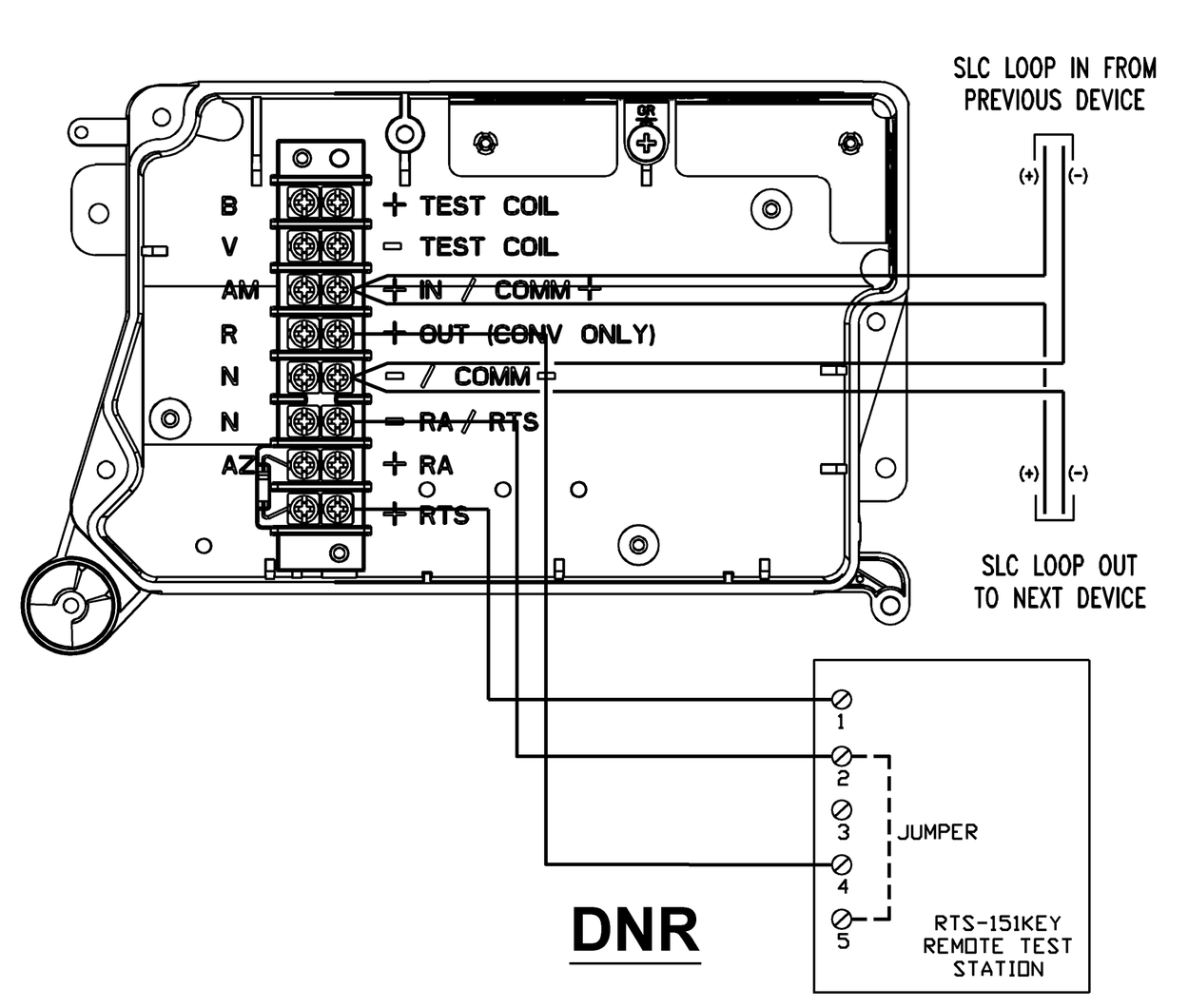

DNR

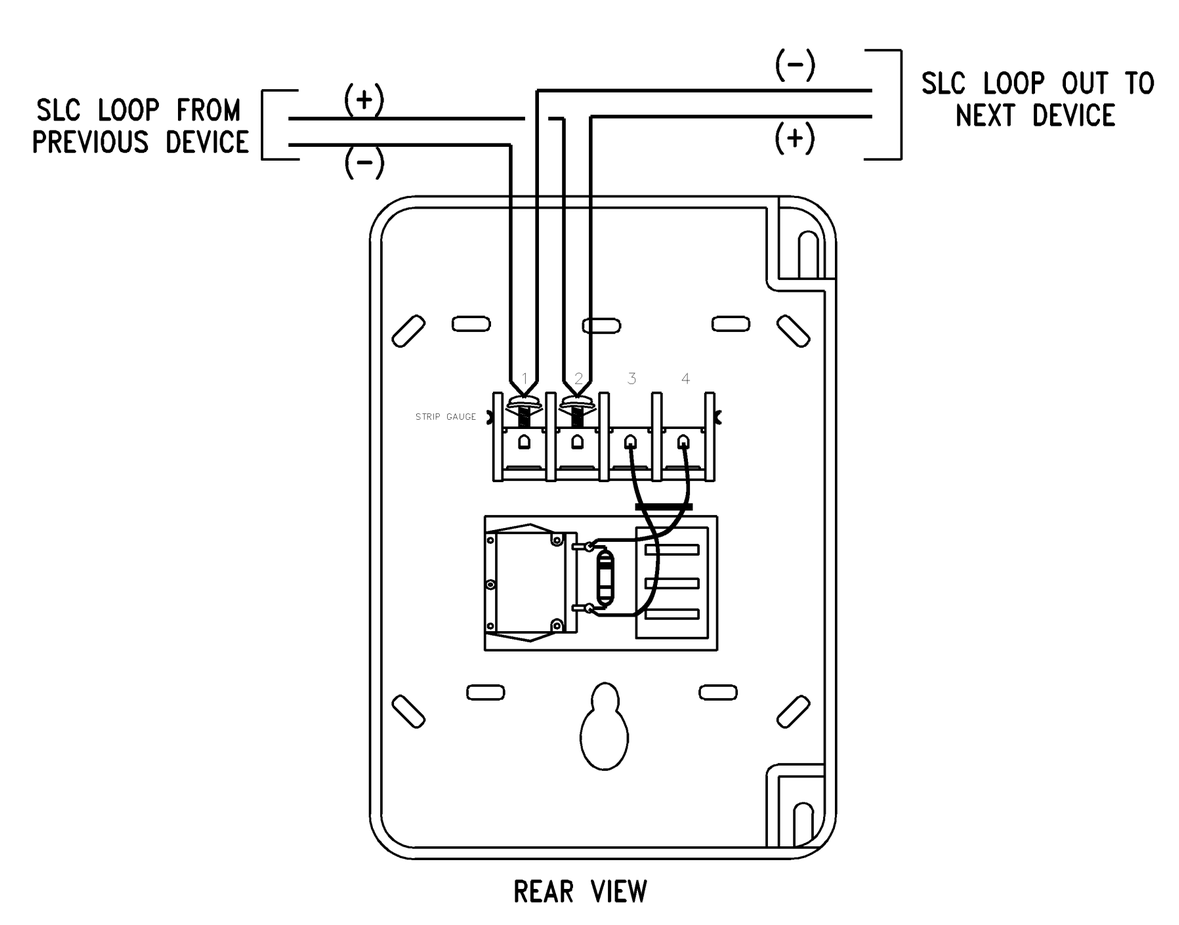

NOTE:
THE NOT-BG12LX CAN BE FLUSH MOUNTED ON A SINGLE GANG DEEP BOX OR CAN BE SURFACE MOUNTED ON A NOTIFIER SB-10 BOX.

NBG-12LX

RELAY

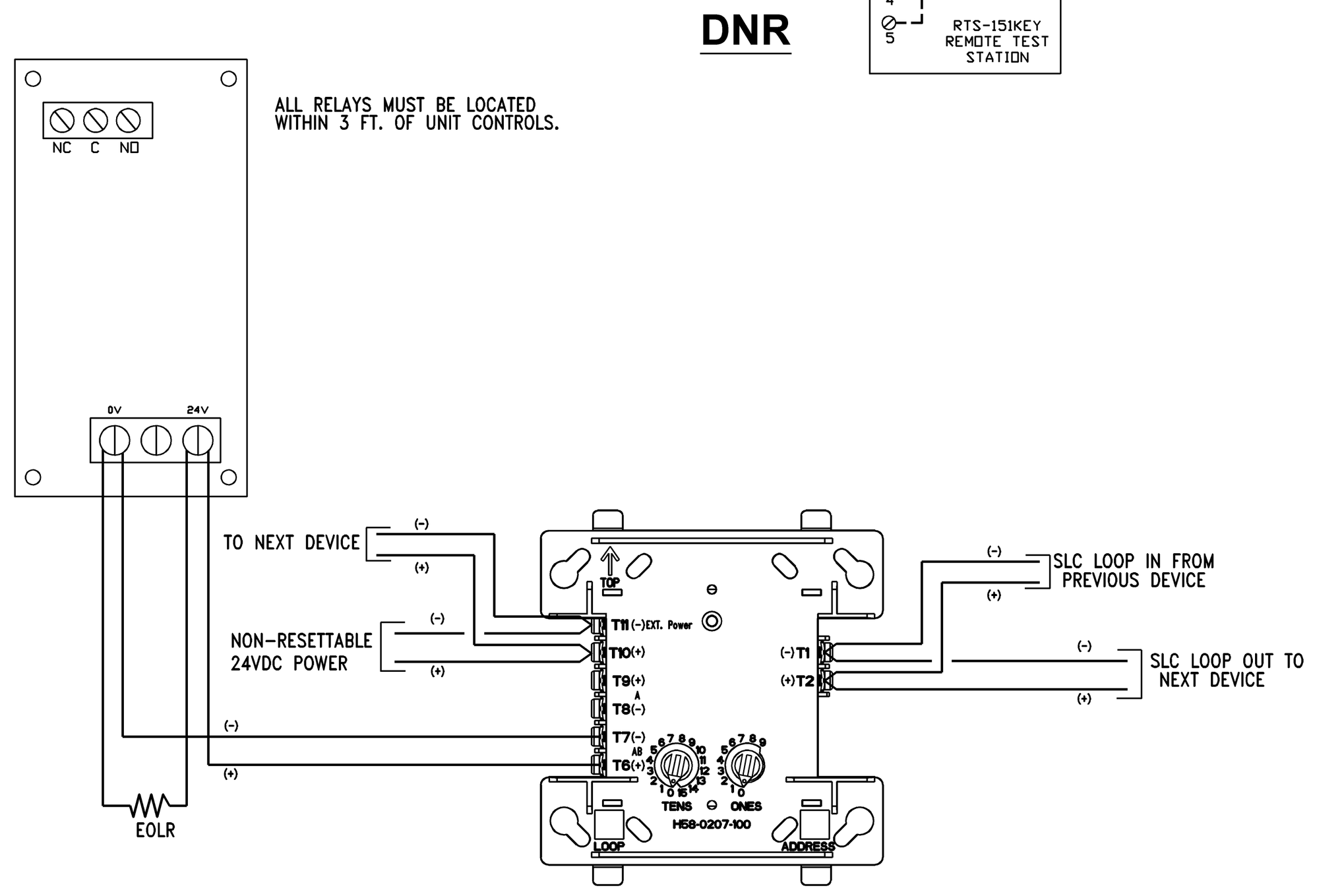

FCM-1

DUCT DETECTOR ASSEMBLY (TYP.)

SIGNALING LINE (ADDRESSABLE) CIRCUITS SHIELDING EXAMPLE

UL LISTED FIRE PROTECTIVE SIGNALING CABLES SHALL BE PROVIDED

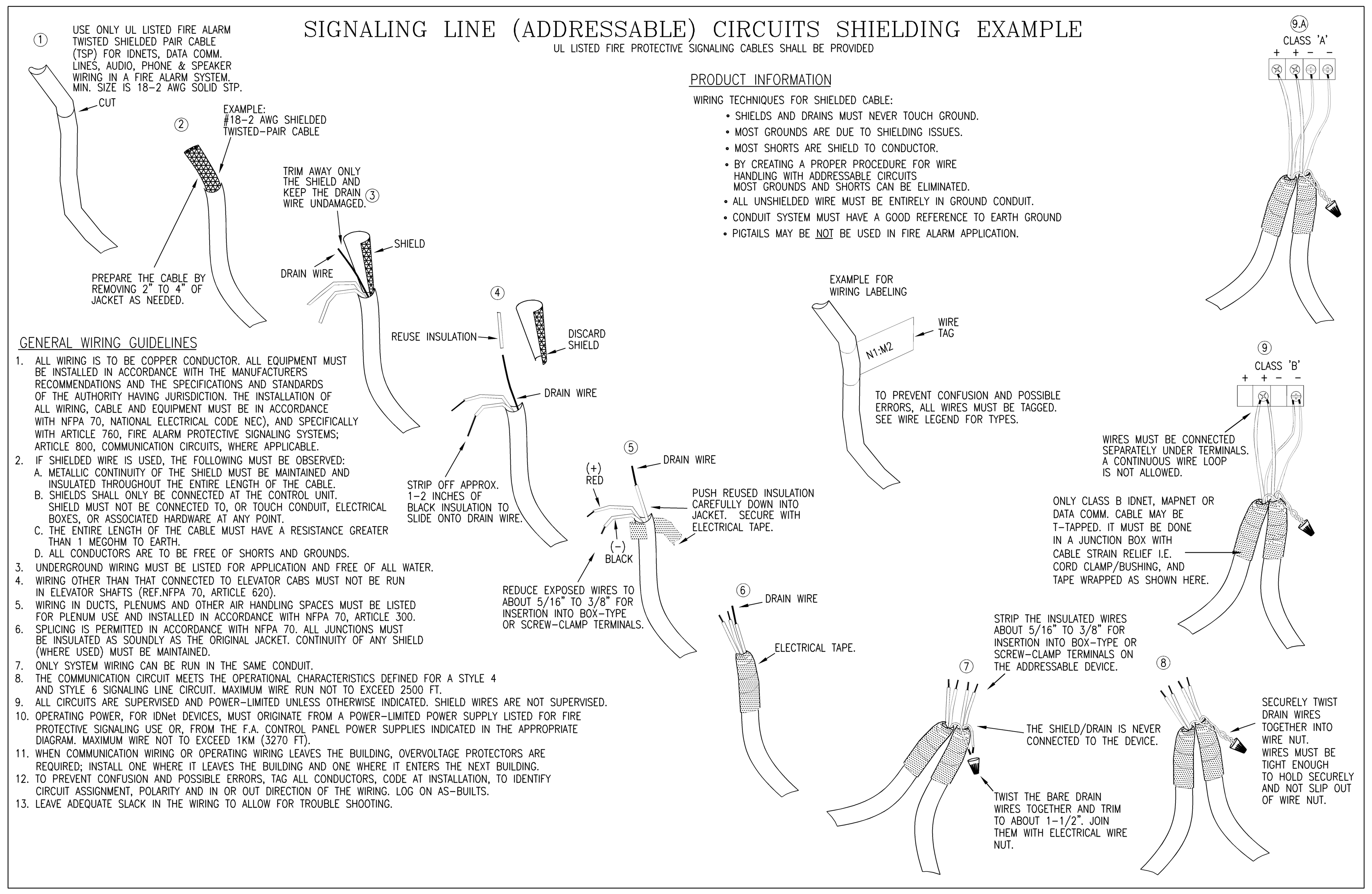

PRODUCT INFORMATION

WIRING TECHNIQUES FOR SHIELDED CABLE:
- SHIELDS AND DRAINS MUST NEVER TOUCH GROUND.
- MOST GROUNDS ARE DUE TO SHIELDING ISSUES.
- MOST SHORTS ARE SHIELD TO CONDUCTOR.
- BY CREATING A PROPER PROCEDURE FOR WIRE HANDLING WITH ADDRESSABLE CIRCUITS MOST GROUNDS AND SHORTS CAN BE ELIMINATED.
- ALL UNSHIELDED WIRE MUST BE ENTIRELY IN GROUND CONDUIT.
- CONDUIT SYSTEM MUST HAVE A GOOD REFERENCE TO EARTH GROUND
- PIGTAILS MAY BE NOT BE USED IN FIRE ALARM APPLICATION.

GENERAL WIRING GUIDELINES

1. ALL WIRING IS TO BE COPPER CONDUCTOR. ALL EQUIPMENT MUST BE INSTALLED IN ACCORDANCE WITH THE MANUFACTURERS RECOMMENDATIONS AND THE SPECIFICATIONS AND STANDARDS OF THE AUTHORITY HAVING JURISDICTION. THE INSTALLATION OF ALL WIRING, CABLE AND EQUIPMENT MUST BE IN ACCORDANCE WITH NFPA 70, NATIONAL ELECTRICAL CODE NEC), AND SPECIFICALLY WITH ARTICLE 760, FIRE ALARM PROTECTIVE SIGNALING SYSTEMS; ARTICLE 800, COMMUNICATION CIRCUITS, WHERE APPLICABLE.
2. IF SHIELDED WIRE IS USED, THE FOLLOWING MUST BE OBSERVED:
   A. METALLIC CONTINUITY OF THE SHIELD MUST BE MAINTAINED AND INSULATED THROUGHOUT THE ENTIRE LENGTH OF THE CABLE.
   B. SHIELDS SHALL ONLY BE CONNECTED AT THE CONTROL UNIT. SHIELD MUST NOT BE CONNECTED TO, OR TOUCH CONDUIT, ELECTRICAL BOXES, OR ASSOCIATED HARDWARE AT ANY POINT.
   C. THE ENTIRE LENGTH OF THE CABLE MUST HAVE A RESISTANCE GREATER THAN 1 MEGOHM TO EARTH.
   D. ALL CONDUCTORS ARE TO BE FREE OF SHORTS AND GROUNDS.
3. UNDERGROUND WIRING MUST BE LISTED FOR APPLICATION AND FREE OF ALL WATER.
4. WIRING OTHER THAN THAT CONNECTED TO ELEVATOR CABS MUST NOT BE RUN IN ELEVATOR SHAFTS (REF.NFPA 70, ARTICLE 620).
5. WIRING IN DUCTS, PLENUMS AND OTHER AIR HANDLING SPACES MUST BE LISTED FOR PLENUM USE AND INSTALLED IN ACCORDANCE WITH NFPA 70, ARTICLE 300.
6. SPLICING IS PERMITTED IN ACCORDANCE WITH NFPA 70. ALL JUNCTIONS MUST BE INSULATED AS SOUNDLY AS THE ORIGINAL JACKET. CONTINUITY OF ANY SHIELD (WHERE USED) MUST BE MAINTAINED.
7. ONLY SYSTEM WIRING CAN BE RUN IN THE SAME CONDUIT.
8. THE COMMUNICATION CIRCUIT MEETS THE OPERATIONAL CHARACTERISTICS DEFINED FOR A STYLE 4 AND STYLE 6 SIGNALING LINE CIRCUIT. MAXIMUM WIRE RUN NOT TO EXCEED 2500 FT.
9. ALL CIRCUITS ARE SUPERVISED AND POWER-LIMITED UNLESS OTHERWISE INDICATED. SHIELD WIRES ARE NOT SUPERVISED.
10. OPERATING POWER, FOR IDNet DEVICES, MUST ORIGINATE FROM A POWER-LIMITED POWER SUPPLY LISTED FOR FIRE PROTECTIVE SIGNALING USE OR, FROM THE F.A. CONTROL PANEL POWER SUPPLIES INDICATED IN THE APPROPRIATE DIAGRAM. MAXIMUM WIRE NOT TO EXCEED 1KM (3270 FT).
11. WHEN COMMUNICATION WIRING OR OPERATING WIRING LEAVES THE BUILDING, OVERVOLTAGE PROTECTORS ARE REQUIRED; INSTALL ONE WHERE IT LEAVES THE BUILDING AND ONE WHERE IT ENTERS THE NEXT BUILDING.
12. TO PREVENT CONFUSION AND POSSIBLE ERRORS, TAG ALL CONDUCTORS, CODE AT INSTALLATION, TO IDENTIFY CIRCUIT ASSIGNMENT, POLARITY AND IN OR OUT DIRECTION OF THE WIRING. LOG ON AS-BUILTS.
13. LEAVE ADEQUATE SLACK IN THE WIRING TO ALLOW FOR TROUBLE SHOOTING.

HTK ARCHITECTS PA
900 S. KANSAS AVE. TOPEKA KANSAS 66612 P. 785-266-5373
9300 W 110TH ST. STE. 150 OVERLAND PARK KANSAS 66210 P. 913-663-5373
WWW.HTKARCHITECTS.NET

LS&A Latimer Sommers & Associates, P.A.
CONSULTING ENGINEERS
3639 SW Summerfield Drive, Suite A
Topeka, Kansas 66614-3974
Telephone: (785) 233-3232
FAX: (785) 233-0647
Email: lsapa@lsapa.com
LSA PROJECT NO. 1402032

WILLIAM R. BASSETTE LICENSED 10530 KANSAS PROFESSIONAL ENGINEER
4.15.15

DATE:
- 4-15-15

REVISED DATE:
- 12-18-14
- 2-9-15
- 3-10-15
-

HTK PROJECT NUMBER:
- 1410.03

Department of Administration
Office of Facilities and Procurement Management
800 SW Jackson, Suite 700
Topeka, Kansas 66612-1216
Phone 785-296-8899
FAX 785-296-3456

STATE OF KANSAS
STATE OF KANSAS ENERGY & SERVICE CENTER
Seventh & Van Buren Street, Topeka, Kansas
BUILDING NUMBER 17300-00038

DATE: 4-15-15 DRAWN BY: CAD CHECKED BY: WRB REV: WRB

FIRE ALARM DETAILS AND SCHEDULES

A-012651

EY201

CONSTRUCTION DOCUMENTS

.. EY201.dwg 96 04/14/15 GTC

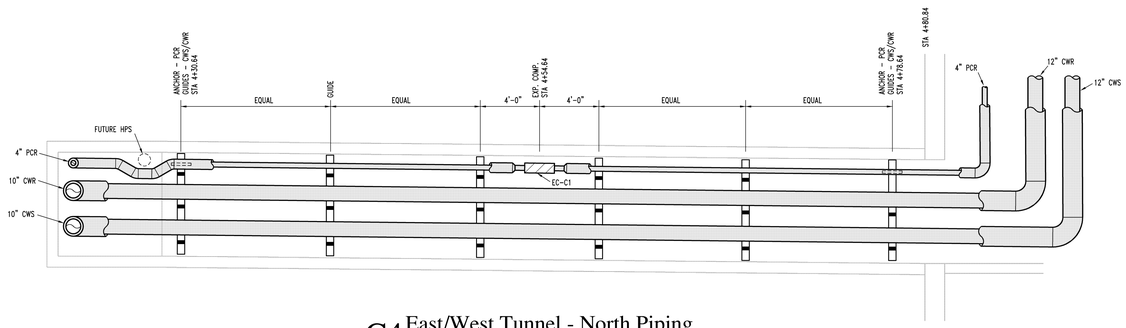

C4 East/West Tunnel - North Piping
1/4"=1'-0" HVAC Piping

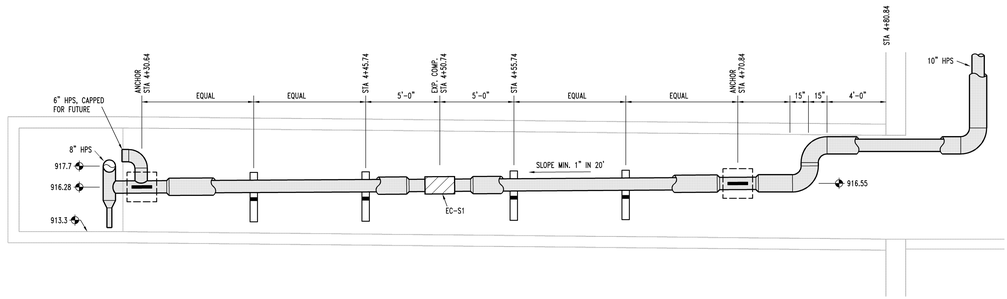

C3 East/West Tunnel - South Piping
1/4"=1'-0" HVAC Piping

EXPANSION COMPENSATOR SCHEDULE								
MARK	LOCATION	SERVICE	SIZE	TYPE		COMPRESSION	EXTENSION	REMARKS
				SLIP	BELL			
EC–S1	TUNNEL	STEAM	10"	X		4"	1"	–
EC–S2	TUNNEL	STEAM	8"	X		4"	1 1/2"	–
EC–S3	TUNNEL	STEAM	8"	X		8"	1 1/2"	–
EC–S4	PARKING GARAGE	STEAM	8"	X		4"	1 1/2"	–
EC–S5	PARKING GARAGE	STEAM	8"		X	–	–	(2) BALL JOINTS
EC–S6	PARKING GARAGE	STEAM	8"		X	–	–	(3) BALL JOINTS
EC–S7	PARKING GARAGE	STEAM	8"		X	–	–	(2) BALL JOINTS
EC–S8	PARKING GARAGE	STEAM	8"		X	–	–	(2) BALL JOINTS
EC–S9	PARKING GARAGE	STEAM	8"		X	–	–	(2) BALL JOINTS
EC–C1	TUNNEL	CONDENSATE	4"	X		4"	1"	–
EC–C2	TUNNEL	CONDENSATE	4"	X		4"	1"	–
EC–C3	TUNNEL	CONDENSATE	4"	X		4"	1"	–
EC–C4	PARKING GARAGE	CONDENSATE	4"	X		4"	1"	–
EC–C5	PARKING GARAGE	CONDENSATE	4"		X	–	–	(2) BALL JOINTS
EC–C6	PARKING GARAGE	CONDENSATE	4"		X	–	–	(2) BALL JOINTS
EC–C7	PARKING GARAGE	CONDENSATE	4"		X	–	–	(2) BALL JOINTS
EC–CW–1	PARKING GARAGE	CHILLED WATER	10"		X	–	–	(2) BALL JOINTS IN EACH CWS & CWR
EC–S10	KSH NW VAULT	STEAM	8"	X		4"	1"	–
EC–S11	KSH NW VAULT	STEAM	6"	X		4"	1"	–
EC–S12	KSH NW VAULT	STEAM	6"	X		4"	1"	–
EC–S13	KSH NW VAULT	STEAM	6"	X		4"	1"	–

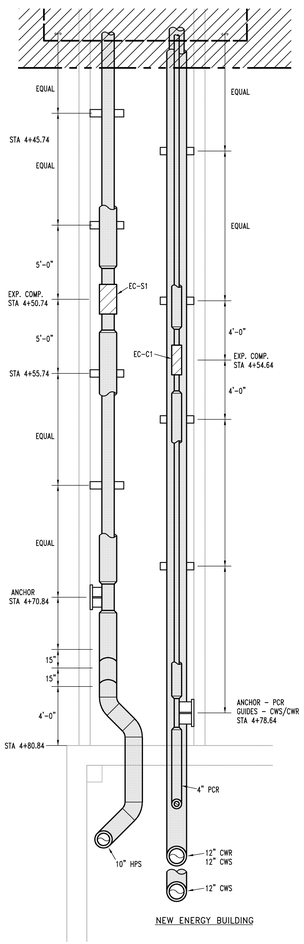

A2 East/West Tunnel Plan
1/4"=1'-0" HVAC Piping

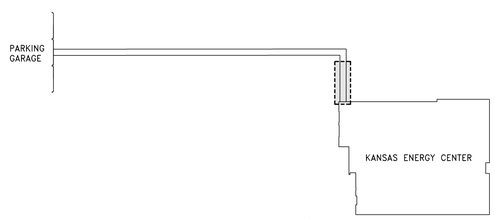

KEY PLAN
NO SCALE

HTK ARCHITECTS PA
9300 W. 110TH ST. STE. 130
OVERLAND PARK, KANSAS 66210
P: 913.663.5373
9105 KANSAS AVE.
TOPEKA KANSAS 66612
P: 785.266.5373
WWW.HTKARCHITECTS.NET

LS&A
Latimer Sommers & Associates, P.A.
CONSULTING ENGINEERS
3639 SW Summerfield Drive, Suite A
Topeka, Kansas 66614-3974
Telephone: (785) 233-3232
FAX: (785) 233-0647
Email: lsapa@lsapa.com
LSA PROJECT NO. 1402032

WILLIAM R. BASSETT LICENSED 10530 ENGINEER
4-15-15

DATE:
- 4-15-15

REVISED DATE:
- 12-18-14
- 2-9-15
- 3-10-15

HTK PROJECT NUMBER:
- 1410.03

Department of Administration
Office of Facilities and
Procurement Management
800 SW Jackson, Suite 700
Topeka, Kansas 66612-1216
Phone 785-296-8899
FAX 785-296-3456

STATE OF KANSAS
STATE OF KANSAS ENERGY & SERVICE CENTER
Seventh & Van Buren Street, Topeka, Kansas
BUILDING NUMBER 1730000038
DRAWN BY: CAD CHECKED BY: WRB REV: WRB
DATE: 4-15-15

KEC UTILITY TUNNEL - HVAC PIPING

A-012651

MT101

CONSTRUCTION DOCUMENTS

JCSBC
2-2-2016
Att.9G.--0113

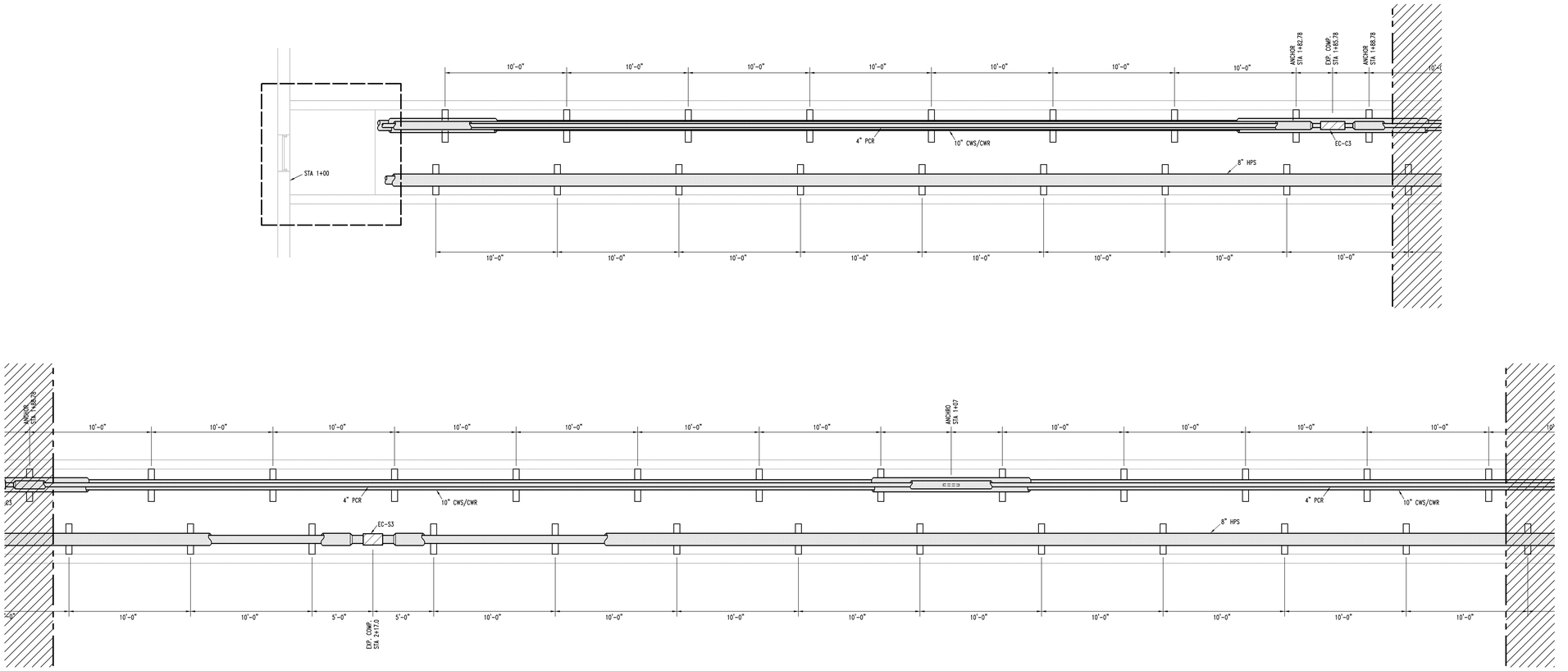

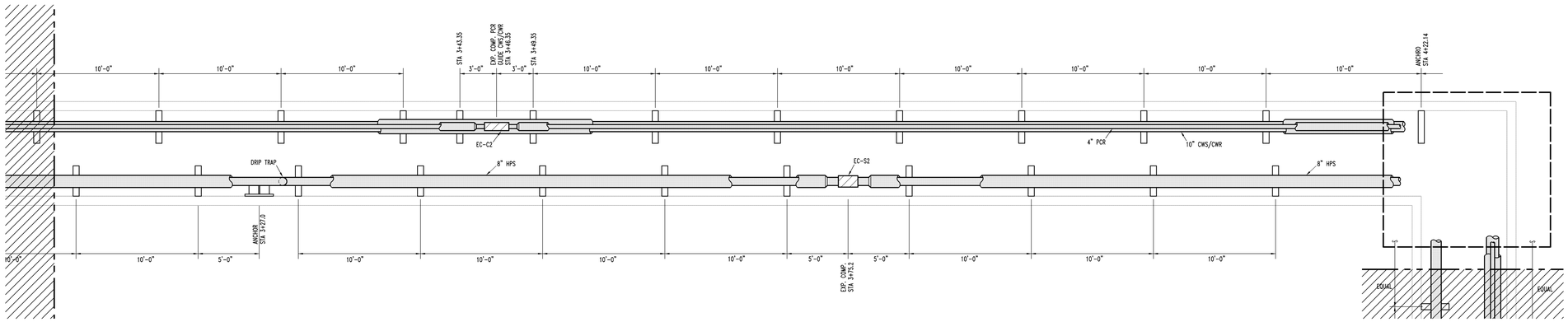

B1 North/South Tunnel Plan

1/4"=1'-0" HVAC Piping

N.

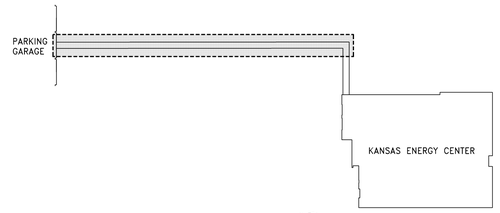

KEY PLAN

NO SCALE

N.

HTK ARCHITECTS PA
9300 W 110TH ST STE 130
OVERLAND PARK KANSAS 66210
P: 913 663 5373
9005 KANSAS AVE
TOPEKA KANSAS 66612
P: 785 266 5373
WWW.HTKARCHITECTS.NET

LS&A
Latimer Sommers & Associates, P.A.
CONSULTING ENGINEERS
3639 SW Summerfield Drive, Suite A
Topeka, Kansas 66614-3974
Telephone: (785) 233-3232
FAX: (785) 233-0547
Email: lsapa@lsapa.com
LSA PROJECT NO. 1402032

WILLIAM R. GASSETT LICENSED 10530 REGISTERED ARCHITECT
4.15.15

DATE:
- 4-15-15

REVISED DATE:
- 12-18-14
- 2-9-15
- 3-10-15

HTK PROJECT NUMBER:
- 1410.03

Department of Administration
Office of Facilities and
Procurement Management
800 SW Jackson, Suite 700
Topeka, Kansas 66612-1216
Phone 785-296-8899
FAX 785-296-3456

STATE OF KANSAS
STATE OF KANSAS ENERGY & SERVICE CENTER
Seventh & Van Buren Street, Topeka, Kansas
BUILDING NUMBER 1730000038
DRAWN BY: CAD CHECKED BY: WRB REV: WRB
DATE: 4-15-15

KEC UTILITY TUNNEL - HVAC PIPING

A-012651

MT102

CONSTRUCTION DOCUMENTS

JCSBC
2-2-2016
Att.9G--0114

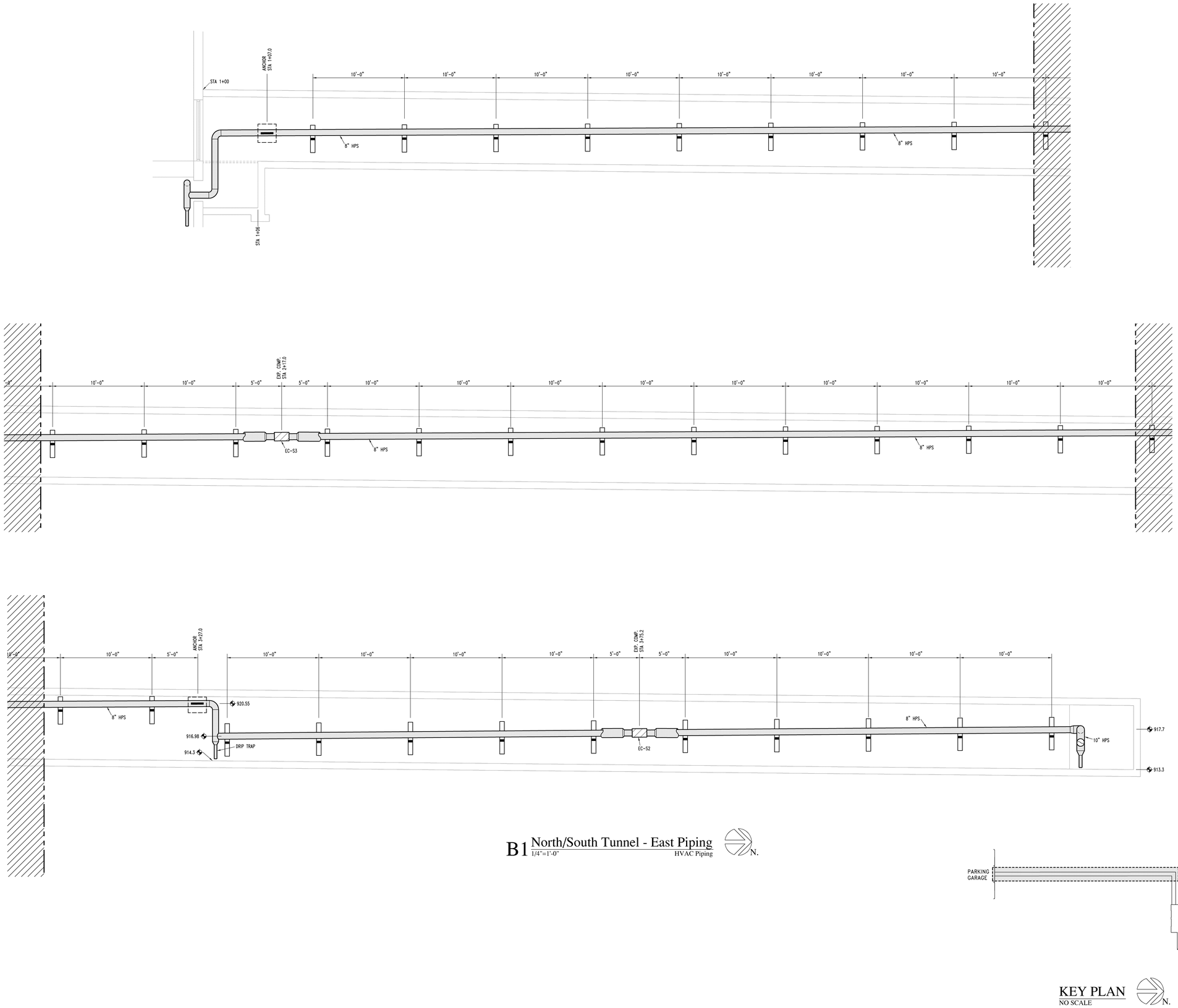

B1 North/South Tunnel - East Piping
1/4"=1'-0"
HVAC Piping

N.

KEY PLAN
NO SCALE

N.

HTK ARCHITECTS PA
9200 W. 110TH ST. STE. 130
OVERLAND PARK, KANSAS 66210
P: 913.663.5373
3005 KANSAS AVE.
TOPEKA KANSAS 66612
P: 785.266.5373
WWW.HTKARCHITECTS.NET

LS&A
Latimer Sommers & Associates, P.A.
CONSULTING ENGINEERS
3639 SW Summerfield Drive, Suite A
Topeka, Kansas 66614-3974
Telephone: (785) 233-3232
FAX: (785) 233-0647
Email: lsapa@lsapa.com
LSA PROJECT NO. 1402032

WILLIAM R. GASSETTE
LICENSED
10530
ARCHITECT
4-15-15

DATE:
- 4-15-15

REVISED DATE:
- 12-18-14
- 2-9-15
- 3-10-15
-

HTK PROJECT NUMBER:
- 1410.03

Department of Administration
Office of Facilities and
Procurement Management
800 SW Jackson, Suite 700
Topeka, Kansas 66612-1216
Phone 785-296-8899
FAX 785-296-3456

STATE OF KANSAS
STATE OF KANSAS ENERGY & SERVICE CENTER
Seventh & Van Buren Street, Topeka, Kansas
BUILDING NUMBER 1730000038
DATE: 4-15-15 DRAWN BY: CAD CHECKED BY: WRB REV: WRB

KEC UTILITY TUNNEL - HVAC PIPING

A-012651

MT103

CONSTRUCTION DOCUMENTS

JCSBC
2-2-2016
Att.9G.--0115

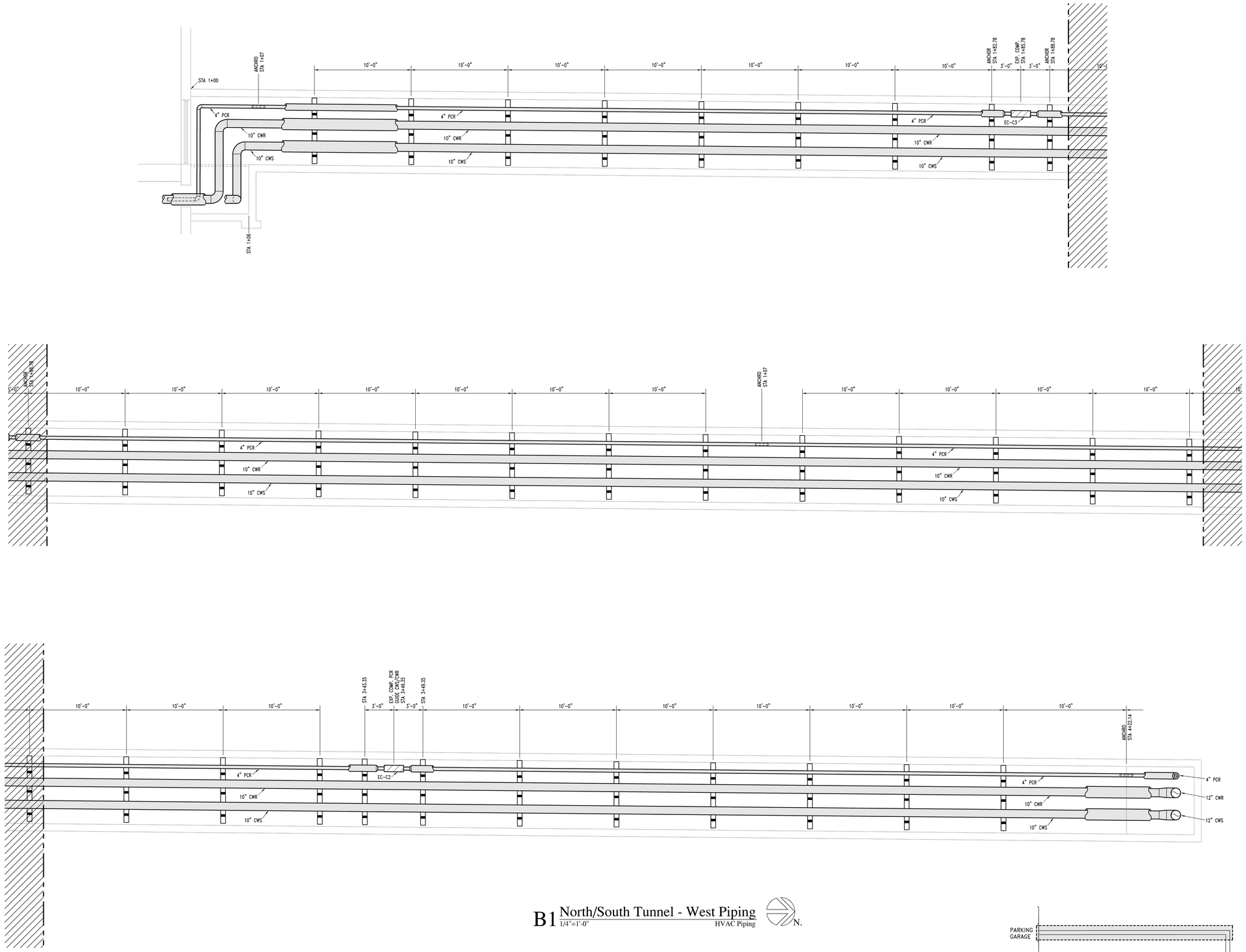

B1 North/South Tunnel - West Piping
1/4"=1'-0"
HVAC Piping

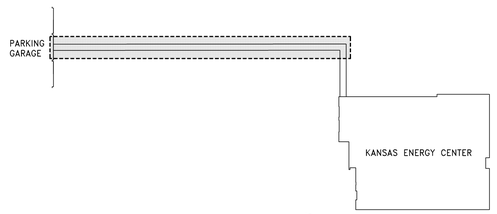

KEY PLAN
NO SCALE

HTK ARCHITECTS PA
900 S. KANSAS AVE. TOPEKA, KANSAS 66612 P. 785.266.5373
9300 W 110TH ST. STE. 150 OVERLAND PARK KANSAS 66210 P. 913.663.5373
WWW.HTKARCHITECTS.NET

LS&A Latimer Sommers & Associates, P.A.
CONSULTING ENGINEERS
3639 SW Summerfield Drive, Suite A
Topeka, Kansas 66614-3974
Telephone: (785) 233-3232
FAX: (785) 233-0647
Email: lsapa@lsapa.com
LSA PROJECT NO. 1402032

WILLIAM R. BASSETT LICENSED 10530 PROFESSIONAL ENGINEER
4-15-15

DATE:
- 4-15-15

REVISED DATE:
- 12-18-14
- 2-9-15
- 3-10-15

HTK PROJECT NUMBER:
- 1410.03

Department of Administration
Office of Facilities and
Procurement Management
800 SW Jackson, Suite 700
Topeka, Kansas 66612-1216
Phone 785-296-8899
FAX 785-296-3456

STATE OF KANSAS
STATE OF KANSAS ENERGY & SERVICE CENTER
Seventh & Van Buren Street, Topeka, Kansas
BUILDING NUMBER 17300-00038

DATE: 4-15-15 DRAWN BY: CAD CHECKED BY: WRB REV: WRB

KEC UTILITY TUNNEL - HVAC PIPING

A-012651

MT104

CONSTRUCTION DOCUMENTS

JCSBC
2-2-2016
Att.9G.--0116

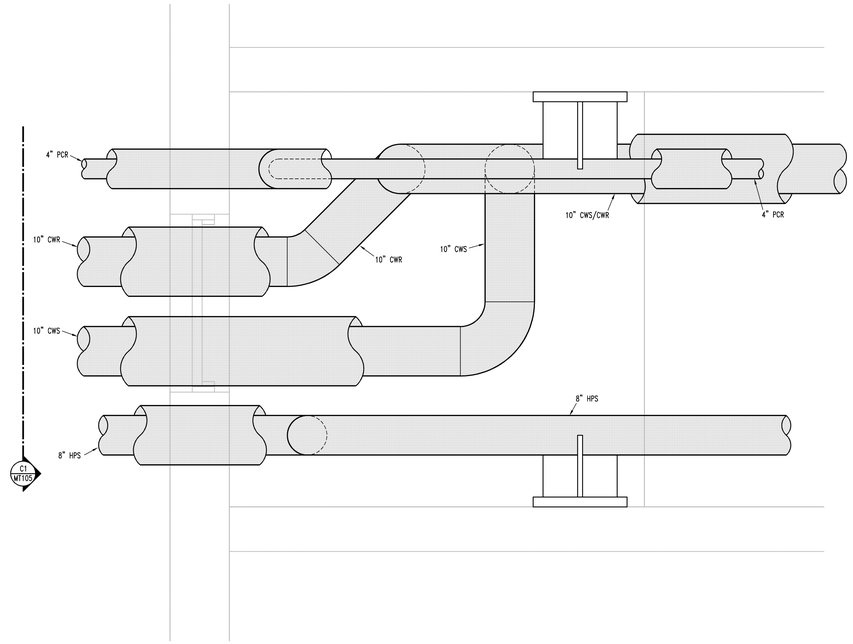

C3 Tunnel Connection To Parking Garage
1"=1'-0"

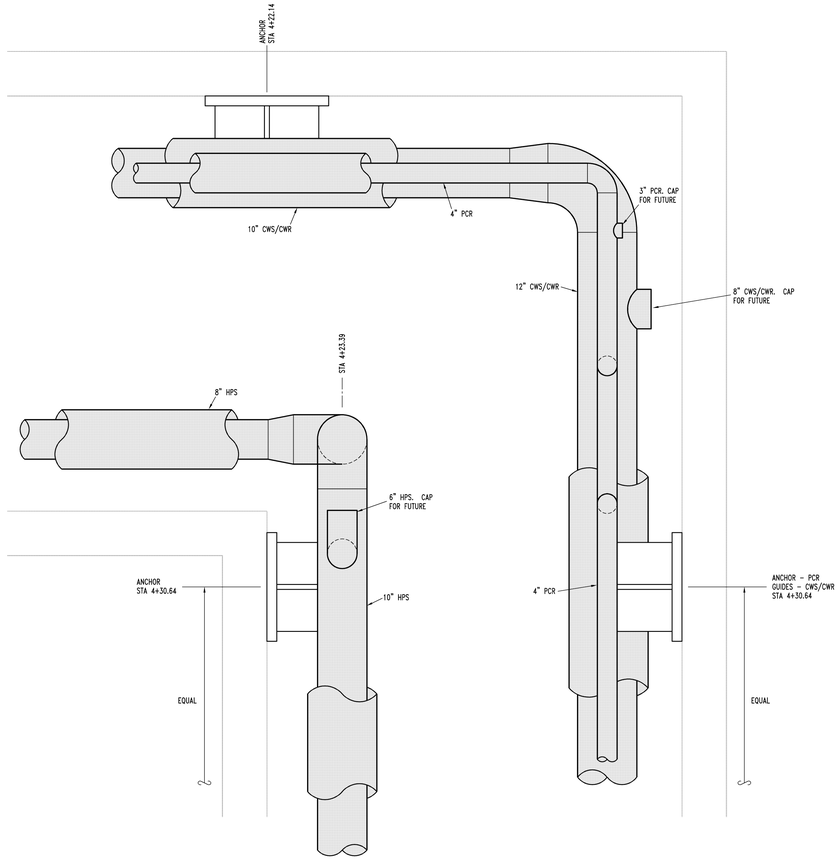

C1 Tunnel Intersection
1"=1'-0"

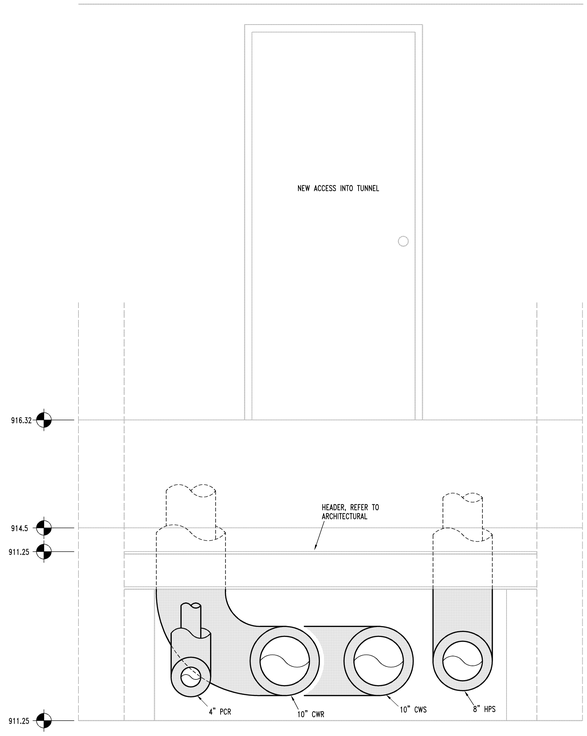

C1 Elevation - Parking Garage Looking North
1"=1'-0"

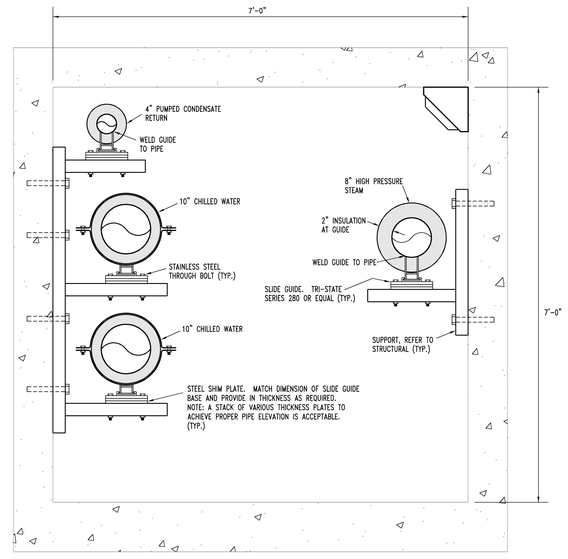

A1 Tunnel Section
1"=1'-0"

HTK ARCHITECTS PA
9300 W. 110TH ST. STE. 130
OVERLAND PARK, KANSAS 66210
P: 913.663.5373
9105 KANSAS AVE.
TOPEKA KANSAS 66612
P: 785.266.5373
WWW.HTKARCHITECTS.NET

LS&A
Latimer Sommers & Associates, P.A.
CONSULTING ENGINEERS
3639 SW Summerfield Drive, Suite A
Topeka, Kansas 66614-3974
Telephone: (785) 233-3232
FAX: (785) 233-0647
Email: lsapa@lsapa.com
LSA PROJECT NO. 1402032

WILLIAM R. BASSITT
LICENSED
10530
PROFESSIONAL ENGINEER
4-15-15

DATE:
- 4-15-15

REVISED DATE:
- 12-18-14
- 2-9-15
- 3-10-15
-

HTK PROJECT NUMBER:
- 1410.03

Department of Administration
Office of Facilities and
Procurement Management
800 SW Jackson, Suite 700
Topeka, Kansas 66612-1216
Phone 785-296-8899
FAX 785-296-3456

STATE OF KANSAS
STATE OF KANSAS ENERGY & SERVICE CENTER
Seventh & Van Buren Street, Topeka, Kansas
BUILDING NUMBER 1730000038

DATE: 4-15-15 | DRAWN BY: CAD | CHECKED BY: WRB | REV: WRB

KEC UTILITY TUNNEL - HVAC PIPING

A-012651

MT105

CONSTRUCTION DOCUMENTS

JCSBC
2-2-2016
Att.9G.--0117

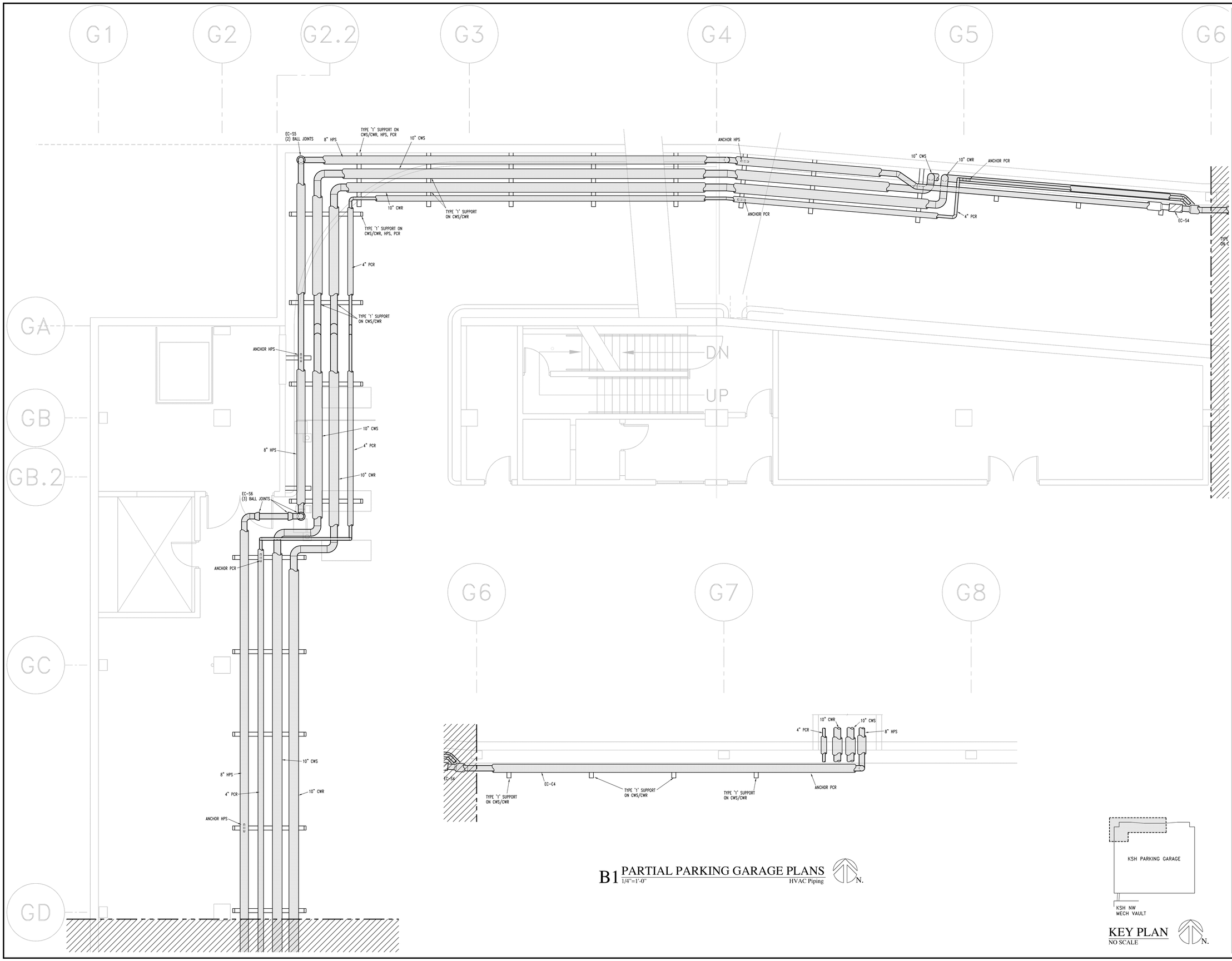

B1 PARTIAL PARKING GARAGE PLANS
1/4"=1'-0" HVAC Piping

N.

KEY PLAN
NO SCALE

N.

HTK ARCHITECTS PA
9300 W. 110TH ST. STE. 130
OVERLAND PARK, KANSAS 66210
P: 913.663.5373
F: 913.663.5373
3905 S. KANSAS AVE.
TOPEKA, KANSAS 66612
P: 785.266.5373
WWW.HTKARCHITECTS.NET

LS&A
Latimer Sommers & Associates, P.A.
CONSULTING ENGINEERS
3639 SW Summerfield Drive, Suite A
Topeka, Kansas 66614-3974
Telephone: (785) 233-3232
FAX: (785) 233-0647
Email: lsapa@lsapa.com
LSA PROJECT NO. 1402032

WILLIAM R. BASSETT LICENSED PROFESSIONAL ENGINEER 10530
4-15-15

DATE:
- 4-15-15

REVISED DATE:
- 12-18-14
- 2-9-15
- 3-10-15

HTK PROJECT NUMBER:
- 1410.03

Department of Administration
Division of Facilities and
Office of Facilities and
Procurement Management
800 SW Jackson, Suite 700
Topeka, Kansas 66612-1216
Phone 785-296-8899
FAX 785-296-3456

STATE OF KANSAS
STATE OF KANSAS ENERGY & SERVICE CENTER
Seventh & Van Buren Street, Topeka, Kansas
BUILDING NUMBER 173000-0038
DATE: 4-15-15 DRAWN BY: CAD CHECKED BY: WRB REV: WRB

PARKING GARAGE PLANS - HVAC PIPING

A-012651

MT201

CONSTRUCTION DOCUMENTS

JCSBC
2-2-2016
Au19G.--0118

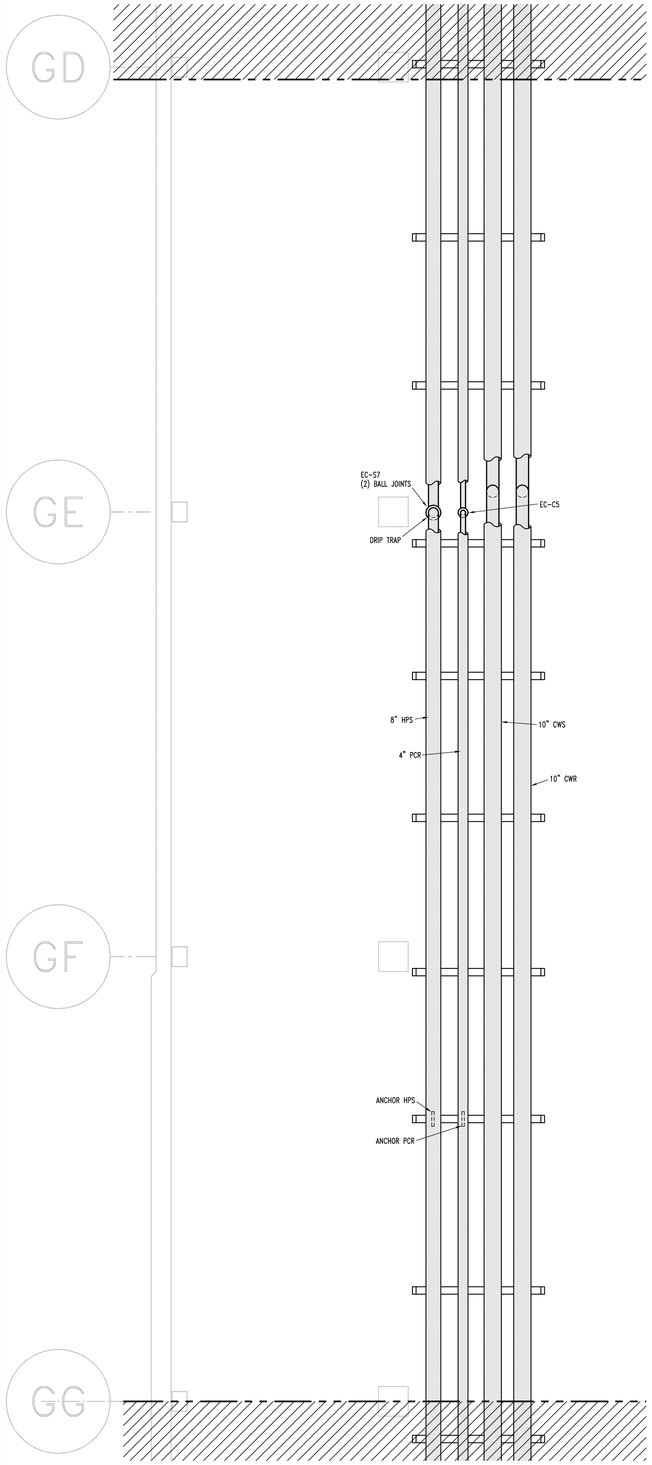

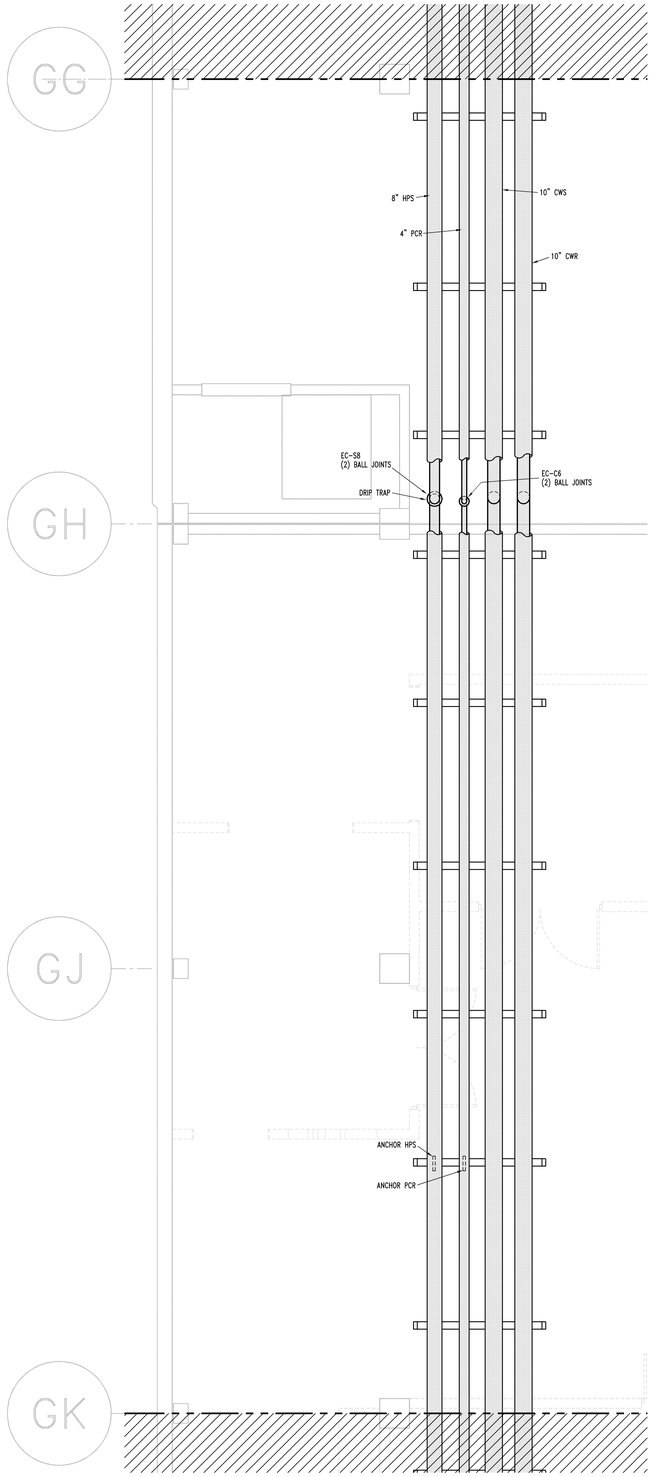

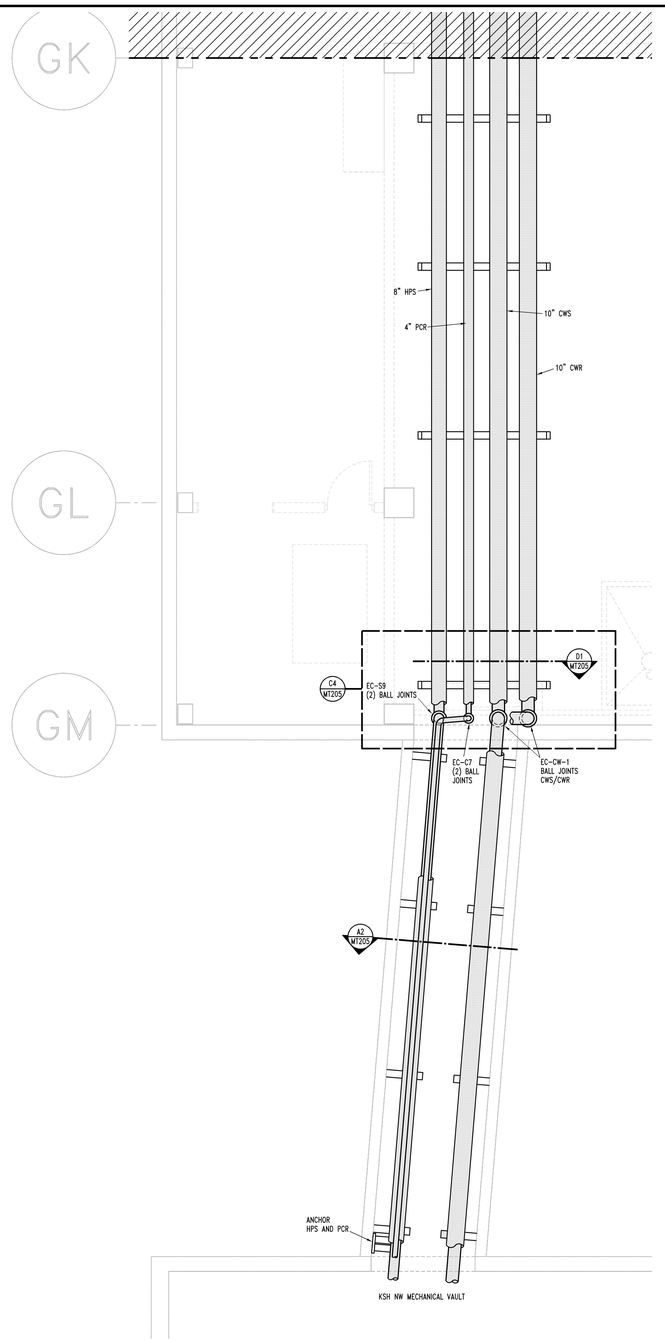

B1 PARTIAL PARKING GARAGE PLANS
1/4"=1'-0"

HVAC Piping

N.

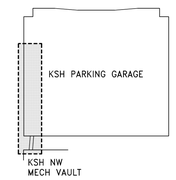

KEY PLAN
NO SCALE

N.

HTK ARCHITECTS PA
9300 W. 110TH ST. STE. 130
OVERLAND PARK, KANSAS 66210
P: 913.663.3373
9105 KANSAS AVE.
TOPEKA KANSAS 66612
P: 785.266.5973
WWW.HTKARCHITECTS.NET

LS&A
Latimer Sommers & Associates, P.A.
CONSULTING ENGINEERS
3639 SW Summerfield Drive, Suite A
Topeka, Kansas 66614-3974
Telephone: (785) 233-3232
FAX: (785) 233-0647
Email: lsapa@lsapa.com
LSA PROJECT NO. 1402032

WILLIAM R. GASSETTE LICENSED PROFESSIONAL ENGINEER 10530
4-15-15

DATE:
- 4-15-15

REVISED DATE:
- 12-18-14
- 2-9-15
- 3-10-15

HTK PROJECT NUMBER:
- 1410.03

Department of Administration
Office of Facilities and
Procurement Management
800 SW Jackson, Suite 700
Topeka, Kansas 66612-1216
Phone 785-296-8899
FAX 785-296-3456

STATE OF KANSAS
STATE OF KANSAS ENERGY & SERVICE CENTER
Seventh & Van Buren Street, Topeka, Kansas
BUILDING NUMBER 17300-00038

DATE: 4-15-15 DRAWN BY: CAD CHECKED BY: WRB REV: WRB

PARKING GARAGE PLANS - HVAC PIPING

A-012651

MT202

CONSTRUCTION DOCUMENTS

JCSBC
2-2-2016
AttL9G.--0119

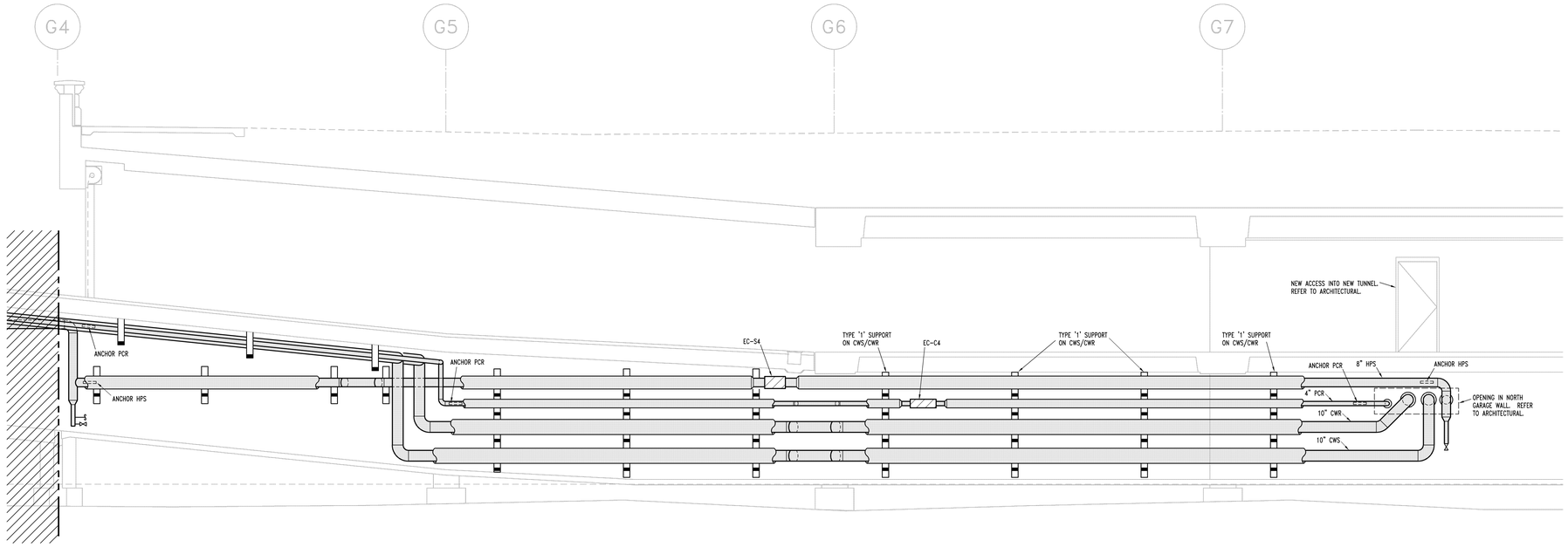

B4 PARTIAL ELEVATION PARKING GARAGE - NORTH WALL, WEST RAMP

1/4"=1'-0"

HVAC Piping

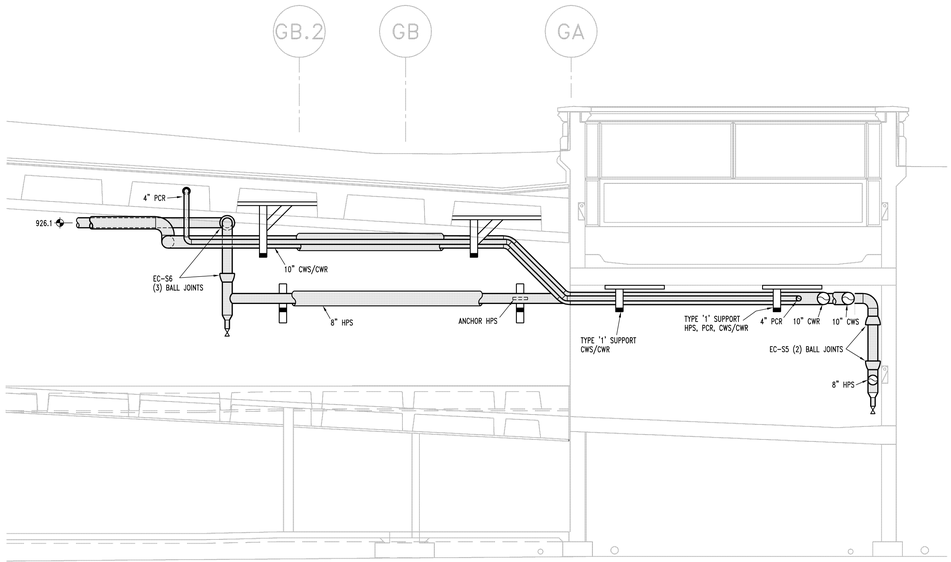

C1 PARTIAL ELEVATION PARKING GARAGE - WEST WALL, WEST RAMP

1/4"=1'-0"

HVAC Piping

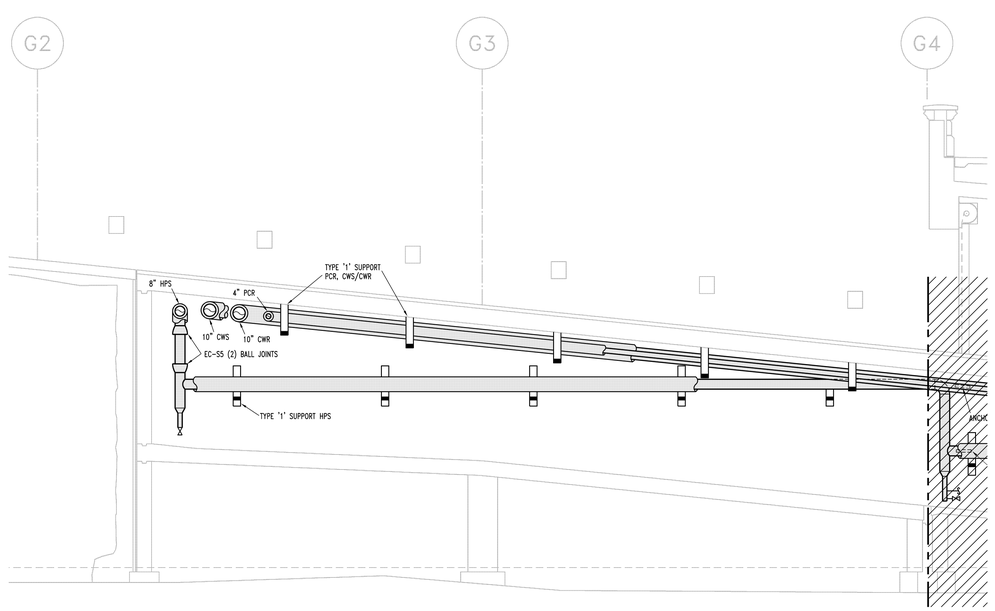

A1 PARTIAL ELEVATION PARKING GARAGE - NORTH WALL, WEST RAMP

1/4"=1'-0"

HVAC Piping

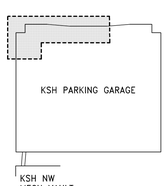

KEY PLAN

NO SCALE

N.

HTK ARCHITECTS PA
9300 W 110TH ST STE 150
OVERLAND PARK KANSAS 66210
P: 913 663 5373
9005 KANSAS AVE
TOPEKA KANSAS 66612
P: 785 266 5373
WWW.HTKARCHITECTS.NET

LS&A
Latimer Sommers & Associates, P.A.
CONSULTING ENGINEERS
3639 SW Summerfield Drive, Suite A
Topeka, Kansas 66614-3974
Telephone: (785) 233-3232
FAX: (785) 233-0647
Email: lsapa@lsapa.com
LSA PROJECT NO. 1402032

WILLIAM R. GASSETT LICENSED PROFESSIONAL ENGINEER 10530

4-15-15

DATE:
- 4-15-15

REVISED DATE:
- 12-18-14
- 2-9-15
- 3-10-15

HTK PROJECT NUMBER:
- 1410.03

Department of Administration
Office of Facilities and
Procurement Management
800 SW Jackson, Suite 700
Topeka, Kansas 66612-1216
Phone 785-296-8899
FAX 785-296-3456

STATE OF KANSAS
STATE OF KANSAS ENERGY & SERVICE CENTER
Seventh & Van Buren Street, Topeka, Kansas
BUILDING NUMBER 17300-00038
DRAWN BY: CAD
CHECKED BY: WRB
REV: WRB
DATE: 4-15-15

PARKING GARAGE ELEVATIONS - HVAC PIPING

A-012651

MT203

CONSTRUCTION DOCUMENTS

JCSBC
2-2-2016
Att.9G--0120

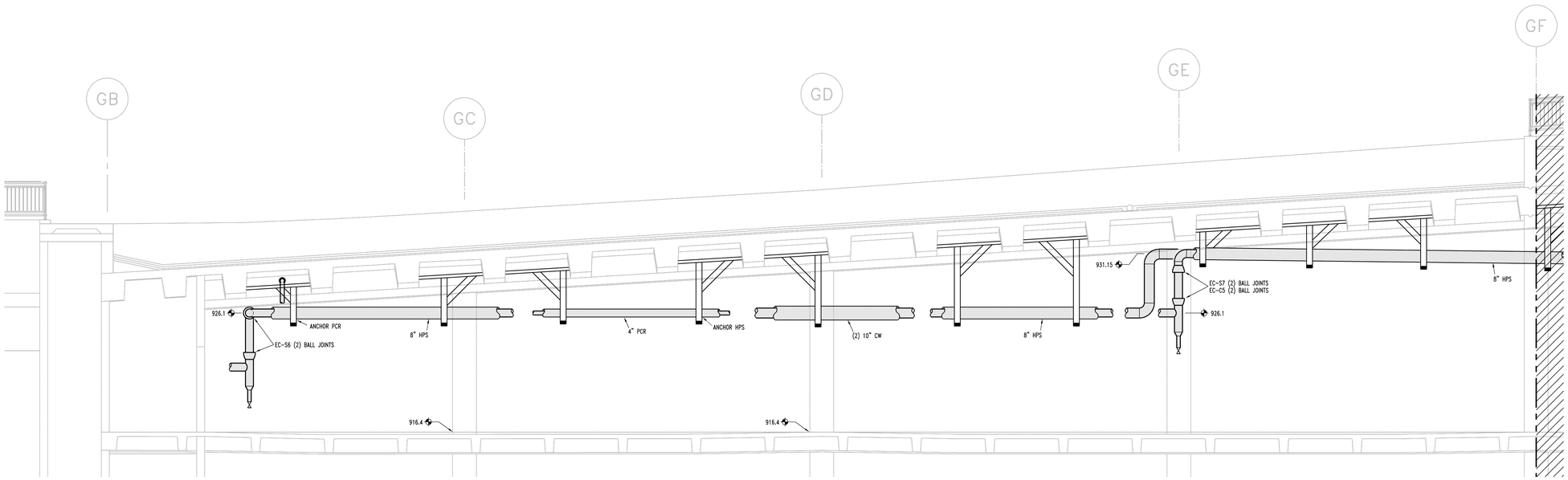

B4 PARTIAL ELEVATION PARKING GARAGE - WEST SIDE
1/4"=1'-0"
HVAC Piping

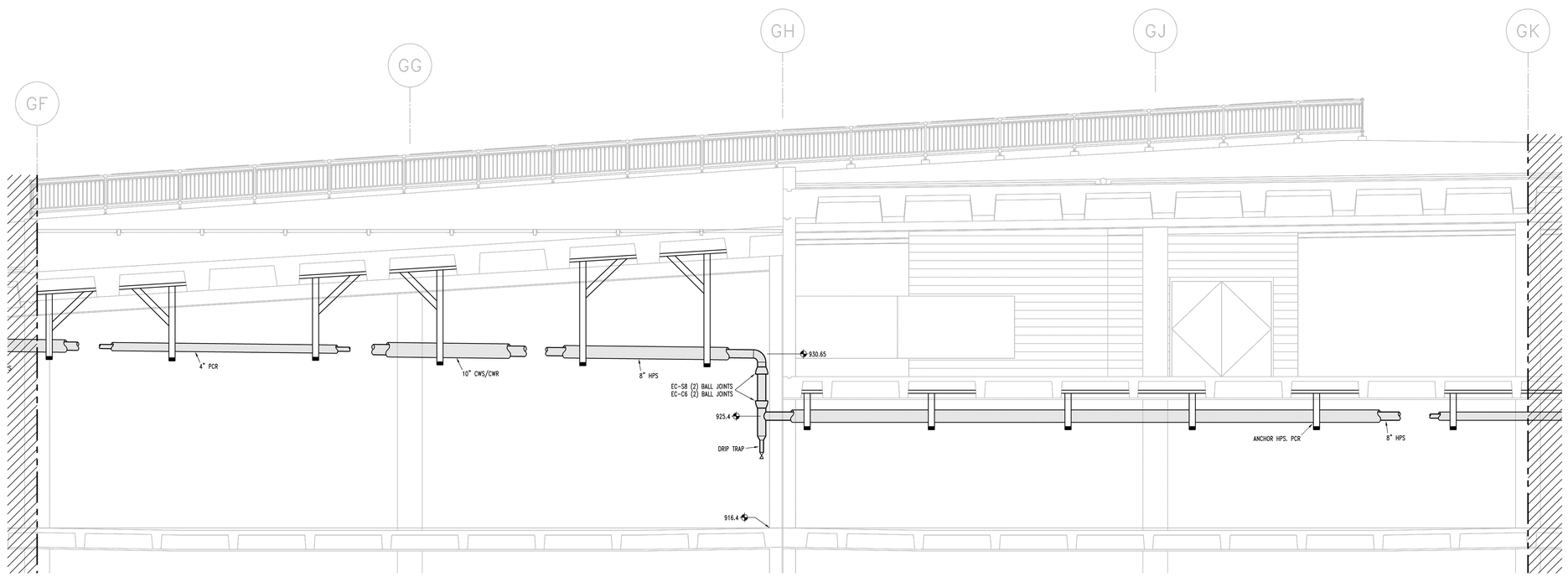

B1 PARTIAL ELEVATION PARKING GARAGE - WEST SIDE
1/4"=1'-0"
HVAC Piping

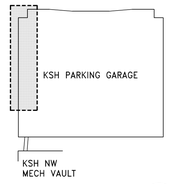

KEY PLAN
NO SCALE

N.

HTK ARCHITECTS PA
9300 W. 110TH ST. STE. 130
OVERLAND PARK, KANSAS 66210
P: 913.663.5373
9105 KANSAS AVE.
TOPEKA KANSAS 66612
P: 785.266.5373
WWW.HTKARCHITECTS.NET

LS&A
Latimer Sommers & Associates, P.A.
CONSULTING ENGINEERS
3639 SW Summerfield Drive, Suite A
Topeka, Kansas 66614-3974
Telephone: (785) 233-3232
FAX: (785) 233-0547
Email: lsapa@lsapa.com
LSA PROJECT NO. 1402032

WILLIAM R. BASSETT
LICENSED
10530
ARCHITECT
4-15-15

DATE:
- 4-15-15

REVISED DATE:
- 12-18-14
- 2-9-15
- 3-10-15

HTK PROJECT NUMBER:
- 1410.03

Department of Administration
Office of Facilities and
Procurement Management
800 SW Jackson, Suite 700
Topeka, Kansas 666121216
Phone 785-296-8899
FAX 785-296-3456

STATE OF KANSAS
STATE OF KANSAS ENERGY & SERVICE CENTER
Seventh & Van Buren Street, Topeka, Kansas
BUILDING NUMBER 17300-00038
DRAWN BY: CAD
CHECKED BY: WRB
REV: WRB
DATE: 4-15-15

PARKING GARAGE ELEVATIONS - HVAC PIPING

A-012651

MT204

CONSTRUCTION DOCUMENTS

JCSBC
2-2-2016
Att.9G.--0121

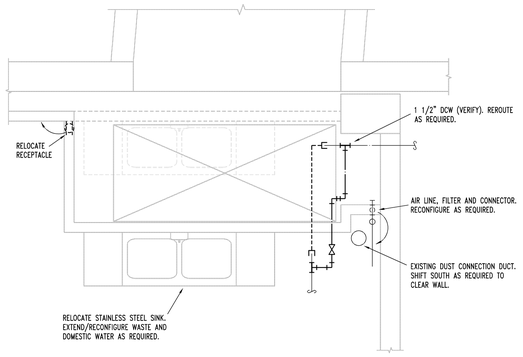

Partial Plan South Wall
C4 KSH North Maintenance
1/2"=1'-0"

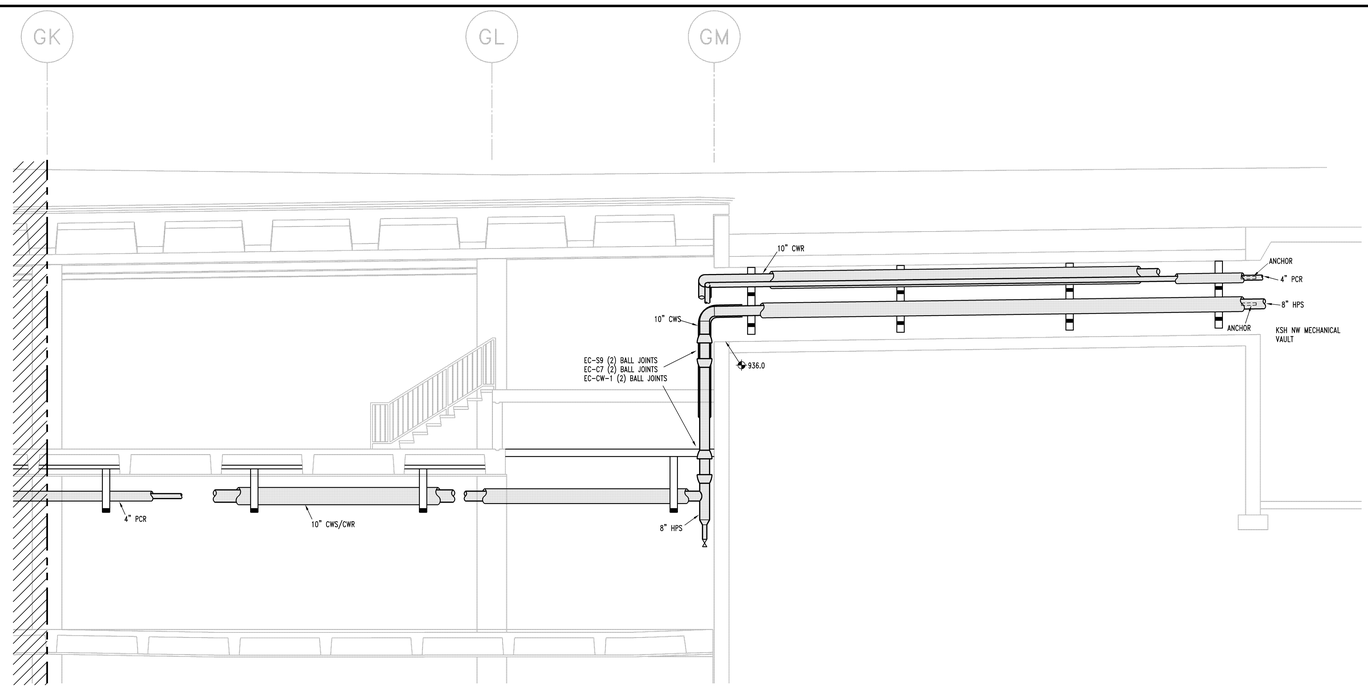

A4 PARTIAL ELEVATION PARKING GARAGE - WEST SIDE
1/4"=1'-0"
HVAC Piping

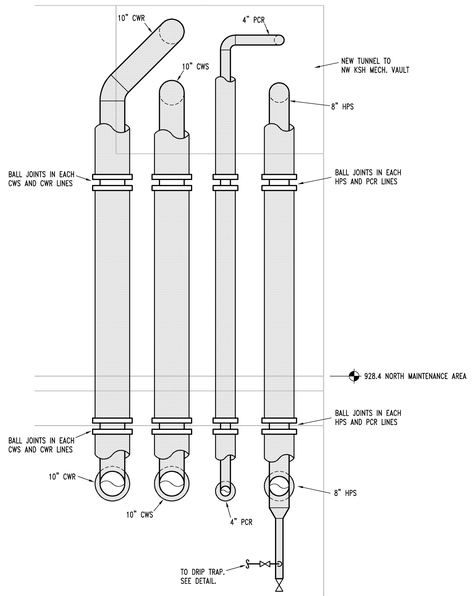

Elevation At South Wall
D1 KSH North Maintenance
1/2"=1'-0"

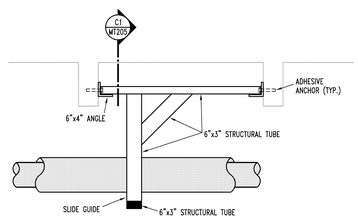

C2 Elevation
1/2"=1'-0"

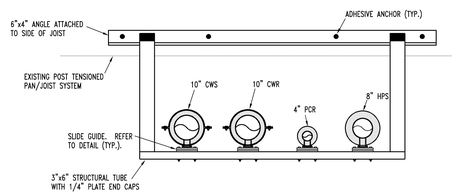

Typical Pipe Support
C1 In Parking Garage
1/2"=1'-0"

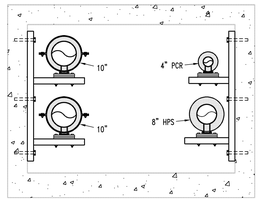

A2 Tunnel Section
1/2"=1'-0"

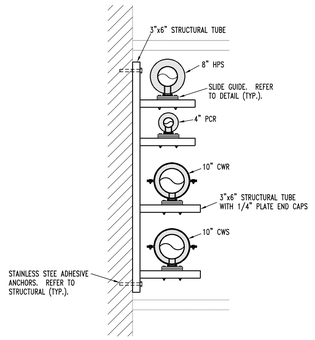

Pipe Support
B1 North Wall, Parking Garage
1/2"=1'-0"

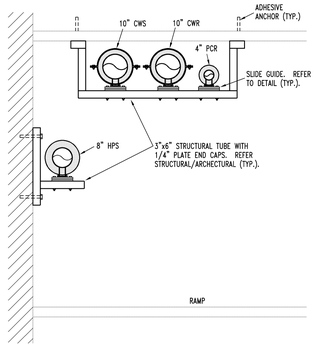

Pipe Support
A1 North Wall, Parking Garage
1/2"=1'-0"

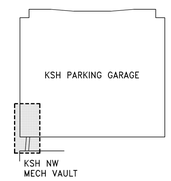

KEY PLAN
NO SCALE

N.

HTK ARCHITECTS PA
9300 W. 110TH ST. STE. 130
OVERLAND PARK, KANSAS 66210
P: 913.663.5373
3905 KANSAS AVE.
TOPEKA KANSAS 66612
P: 785.266.5373
WWW.HTKARCHITECTS.NET

LS&A
Latimer Sommers & Associates, P.A.
CONSULTING ENGINEERS
3639 SW Summerfield Drive, Suite A
Topeka, Kansas 66614-3974
Telephone: (785) 233-3232
FAX: (785) 233-0647
Email: lsapa@lsapa.com
LSA PROJECT NO. 1402032

WILLIAM R. BASSITT LICENSED 10530 REGISTERED ARCHITECT
4.15.15

DATE:
- 4-15-15

REVISED DATE:
- 12-18-14
- 2-9-15
- 3-10-15

HTK PROJECT NUMBER:
- 1410.03

Department of Administration
Office of Facilities and
Procurement Management
800 SW Jackson, Suite 700
Topeka, Kansas 66612-1216
Phone 785-296-8899
FAX 785-296-3456

STATE OF KANSAS
STATE OF KANSAS ENERGY & SERVICE CENTER
Seventh & Van Buren Street, Topeka, Kansas
BUILDING NUMBER 173000000038
DRAWN BY: CAD CHECKED BY: WRB REV: WRB
DATE: 4-15-15

PARKING GARAGE ELEVATIONS - HVAC PIPING

A-012651

MT205

CONSTRUCTION DOCUMENTS

JCSBC
2-2-2016
Att.9G.-0122

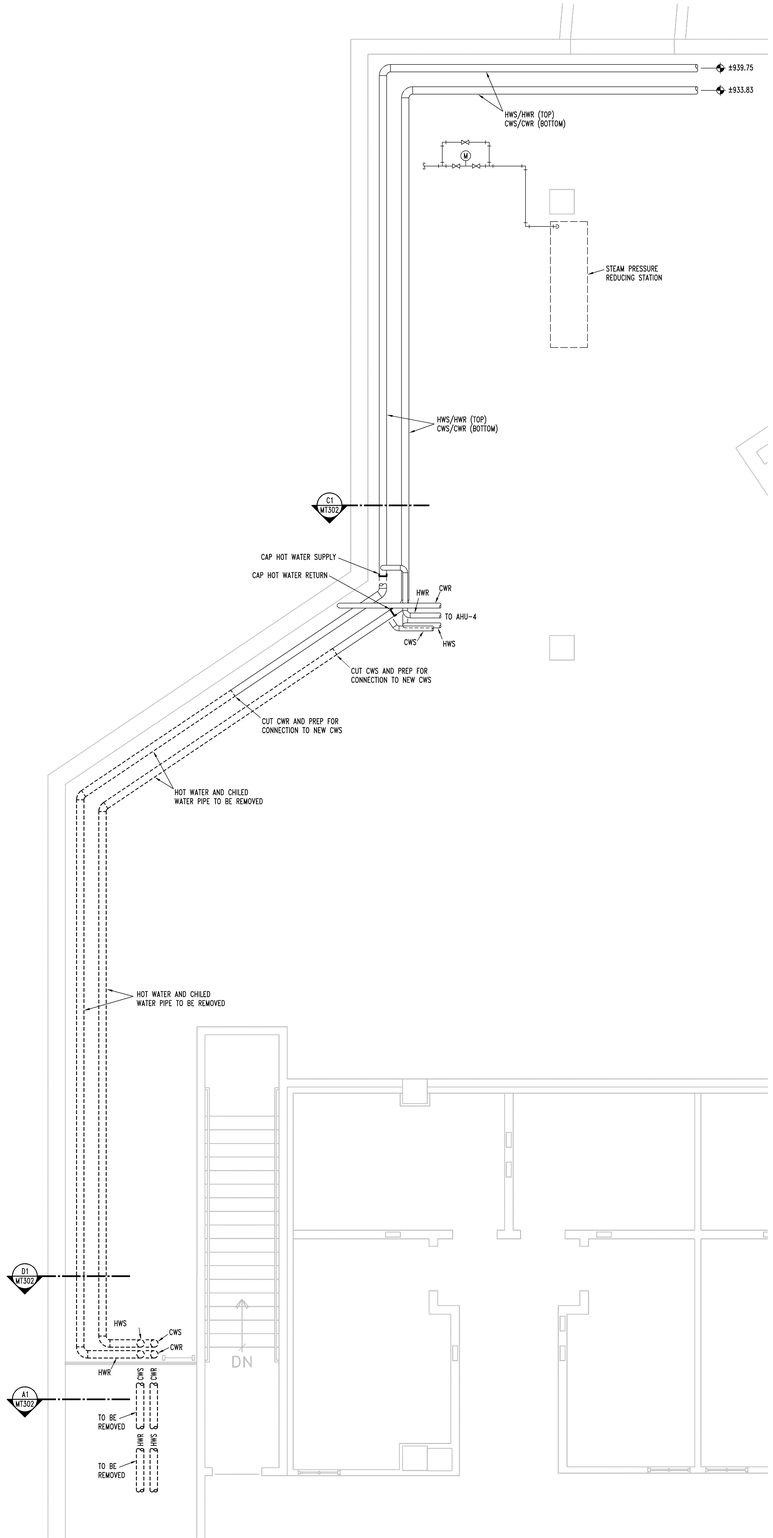

C1 Partial NW Mechanical Vault - Lower Level West
1/4"=1'-0" Demolition

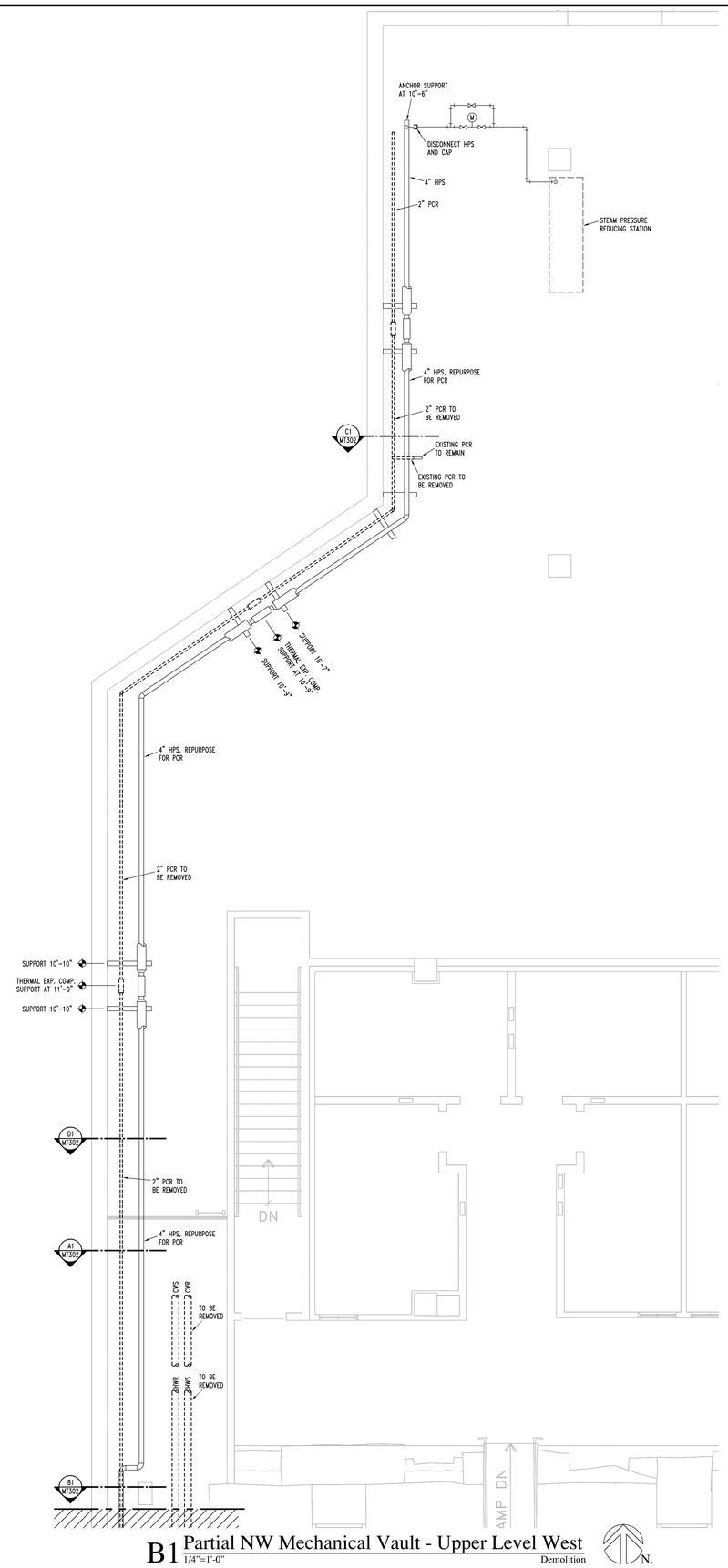

B1 Partial NW Mechanical Vault - Upper Level West
1/4"=1'-0" Demolition

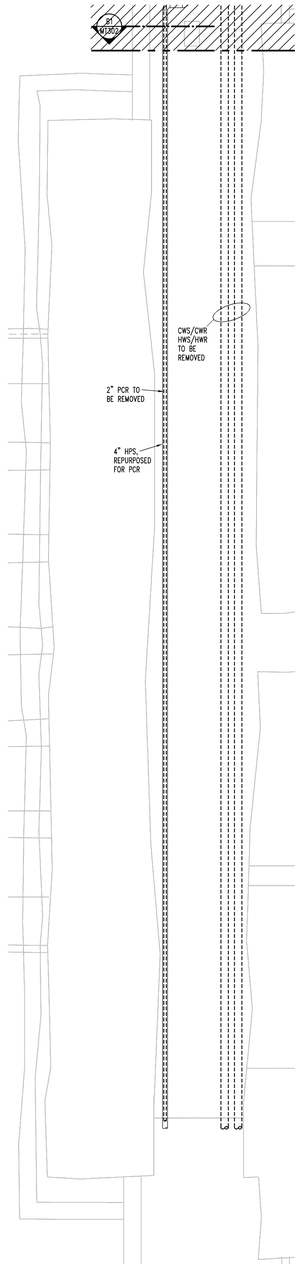

A2 Connecting Tunnel Between NW and SW Mech. Vault
1/4"=1'-0" Demolition

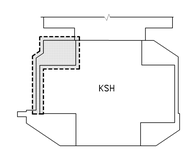

KEY PLAN
NO SCALE

N.

HTK ARCHITECTS PA
9300 W 110TH ST STE 150
OVERLAND PARK KANSAS 66210
P: 913 663 5373
9105 KANSAS AVE
TOPEKA KANSAS 66612
P: 785 266 5373
WWW.HTKARCHITECTS.NET

LS&A
Latimer Sommers & Associates, P.A.
CONSULTING ENGINEERS
3639 SW Summerfield Drive, Suite A
Topeka, Kansas 66614-3974
Telephone: (785) 233-3232
FAX: (785) 233-0647
Email: lsapa@lsapa.com
LSA PROJECT NO. 1402032

WILLIAM R. BASSETT
LICENSED
10530
ENGINEER
4-15-15

DATE:
- 4-15-15

REVISED DATE:
- 12-18-14
- 2-9-15
- 3-10-15

HTK PROJECT NUMBER:
- 1410.03

Department of Administration
Office of Facilities and
Procurement Management
800 SW Jackson, Suite 700
Topeka, Kansas 66612-1216
Phone 785-296-8899
FAX 785-296-3456

STATE OF KANSAS
STATE OF KANSAS ENERGY & SERVICE CENTER
Seventh & Van Buren Street, Topeka, Kansas
BUILDING NUMBER 173000-00038
DATE: 4-15-15
DRAWN BY: CAD
CHECKED BY: WRB
REV: WRB

KSH MECHANICAL VAULT -
HVAC PIPING

A-012651

MT301

CONSTRUCTION
DOCUMENTS

JCSBC
2-2-2016
Att.9G--0123

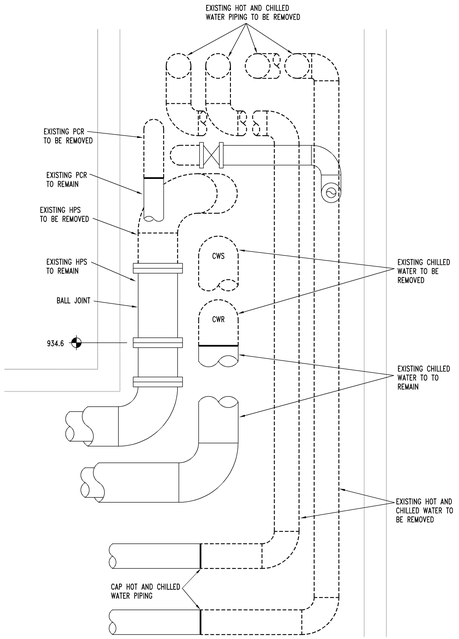

D3 Section - Demolition
1/2"=1'-0"

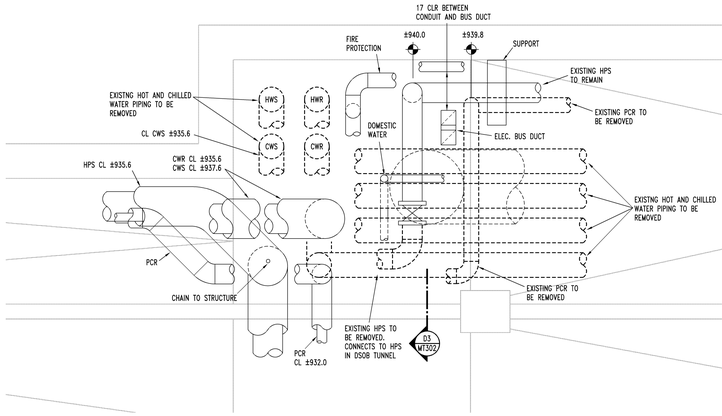

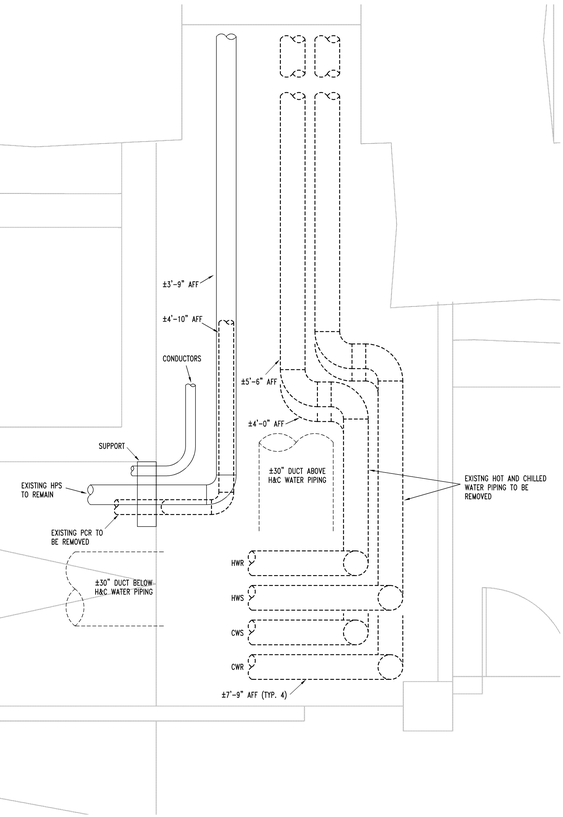

A3 Partial Floor Plan
1/2"=1'-0" Demolition

N.

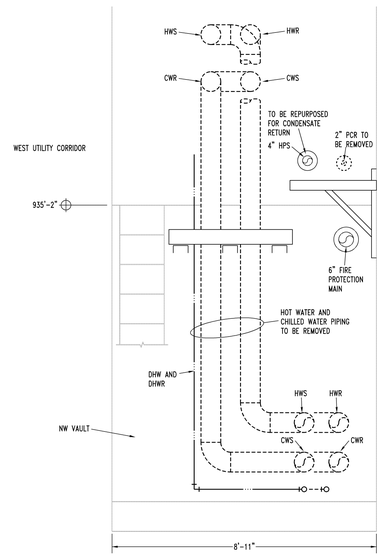

D1 Section - Demolition
1/2"=1'-0"

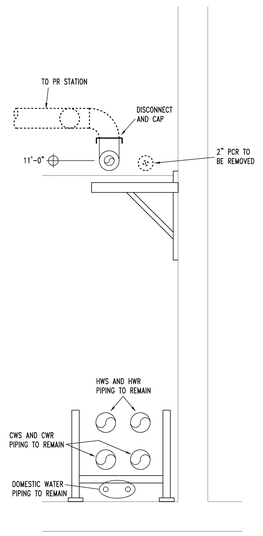

C1 Section - Demolition
1/2"=1'-0"

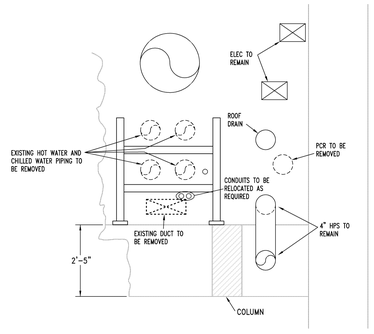

B1 Section - Demolition
1/2"=1'-0"

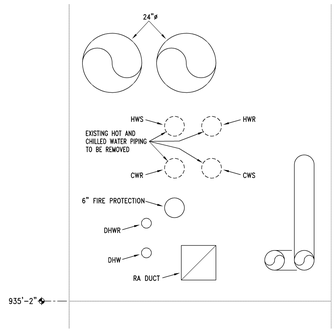

A1 Section - Demolition
1/2"=1'-0"

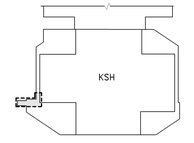

KEY PLAN
NO SCALE

N.

HTK ARCHITECTS PA
9300 W 110TH ST STE 150
OVERLAND PARK KANSAS 66210
P: 913 663 5373
9105 KANSAS AVE
TOPEKA KANSAS 66612
P: 785 266 5373
WWW.HTKARCHITECTS.NET

LS&A Latimer Sommers & Associates, P.A.
CONSULTING ENGINEERS
3639 SW Summerfield Drive, Suite A
Topeka, Kansas 66614-3974
Telephone: (785) 233-3232
FAX: (785) 233-0647
Email: lsapa@lsapa.com
LSA PROJECT NO. 1402032

WILLIAM R. GASSETT LICENSED PROFESSIONAL ENGINEER 10530
4.15.15

DATE:
- 4-15-15

REVISED DATE:
- 12-18-14
- 2-9-15
- 3-10-15

HTK PROJECT NUMBER:
- 1410.03

Department of Administration
Office of Facilities and
Procurement Management
800 SW Jackson, Suite 700
Topeka, Kansas 66612-1216
Phone 785-296-8899
FAX 785-296-3456

STATE OF KANSAS
STATE OF KANSAS ENERGY & SERVICE CENTER
Seventh & Van Buren Street, Topeka, Kansas
BUILDING NUMBER 1730000038
DATE: 4-15-15 DRAWN BY: CAD CHECKED BY: WRB REV: WRB

KSH MECHANICAL VAULT - HVAC PIPING

A-012651

MT302

CONSTRUCTION DOCUMENTS

JCSBC
2-2-2016
Att.9G--0124

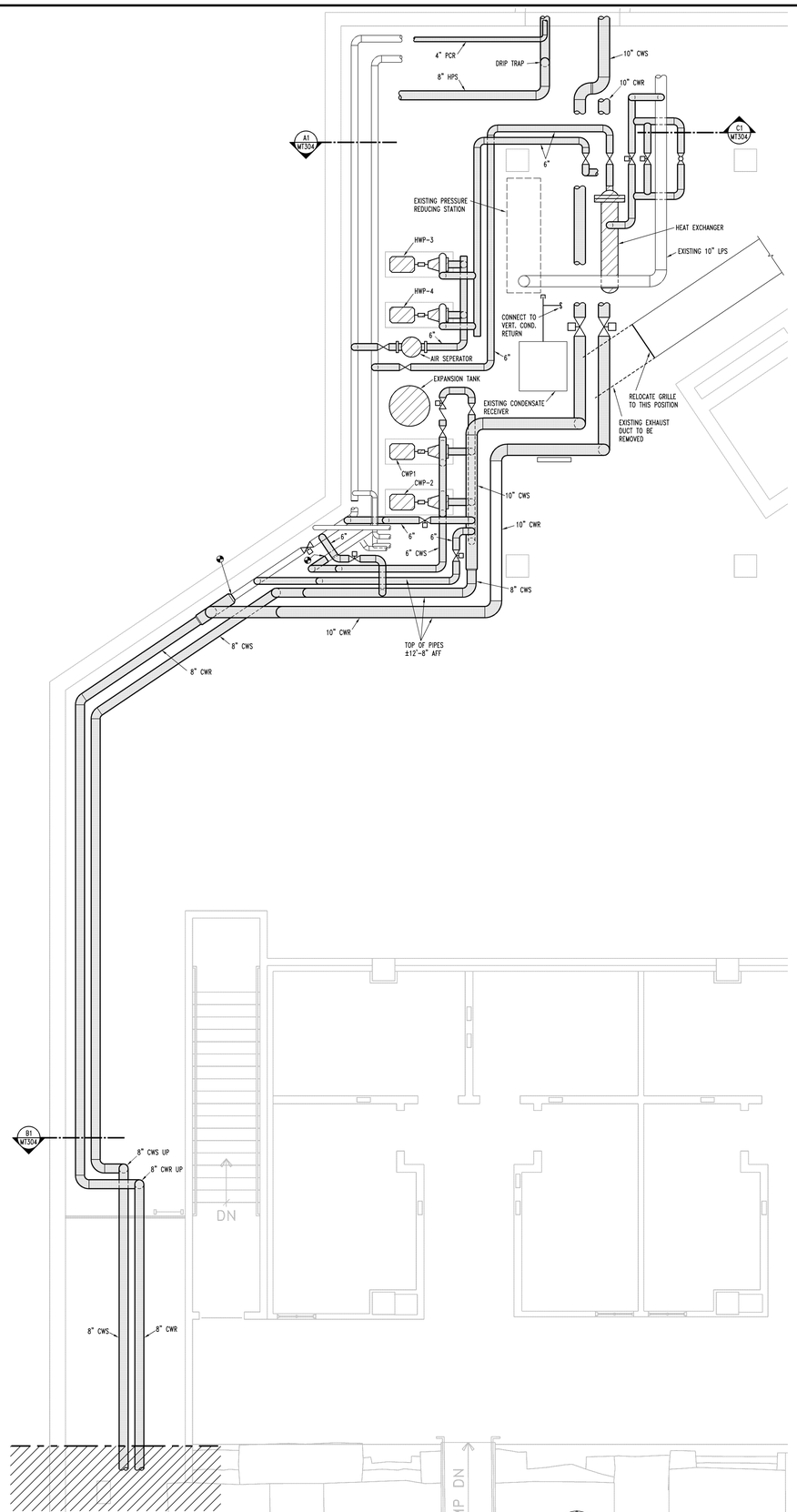

C1 Partial NW Mechanical Vault - Lower Level West
HVAC Piping
N.

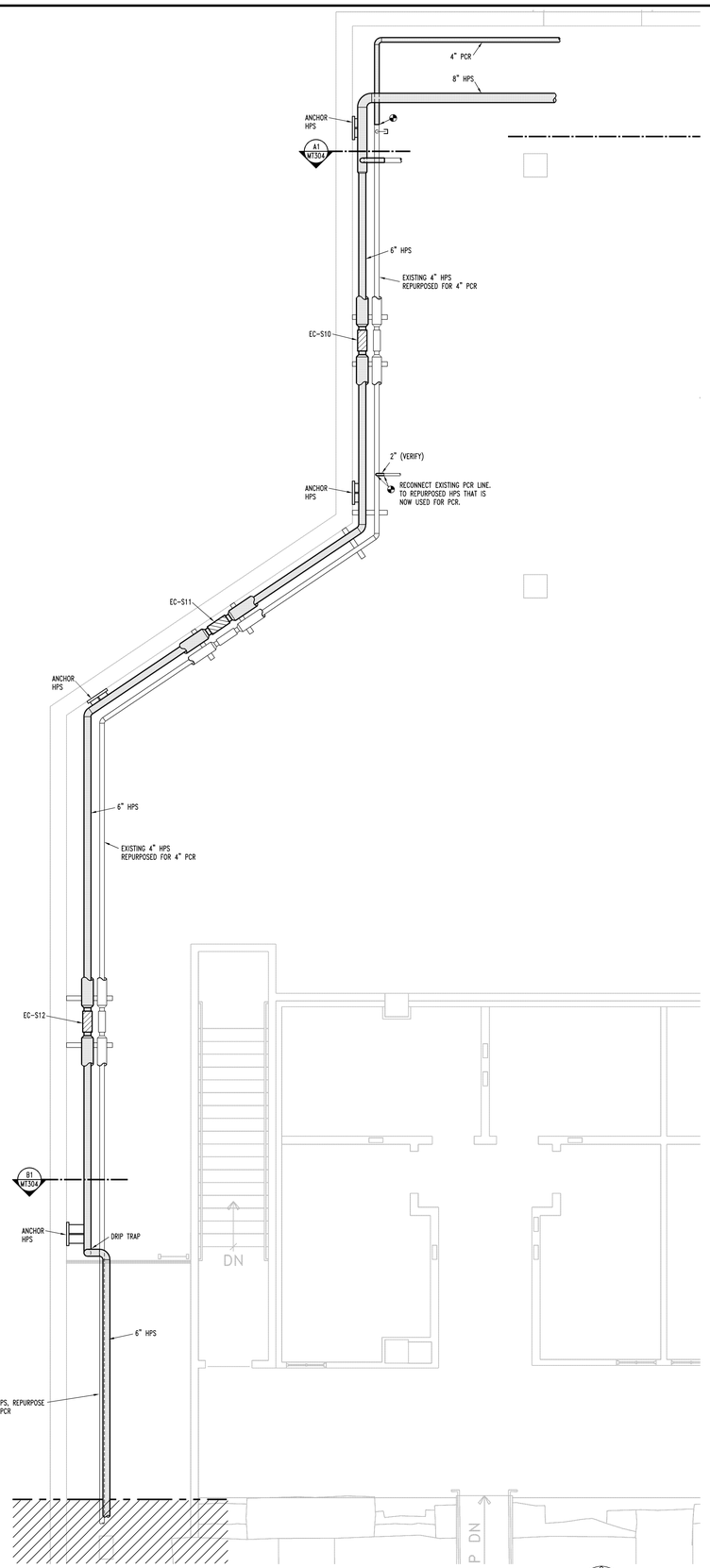

B1 Partial NW Mechanical Vault - Upper Level West
HVAC Piping
N.

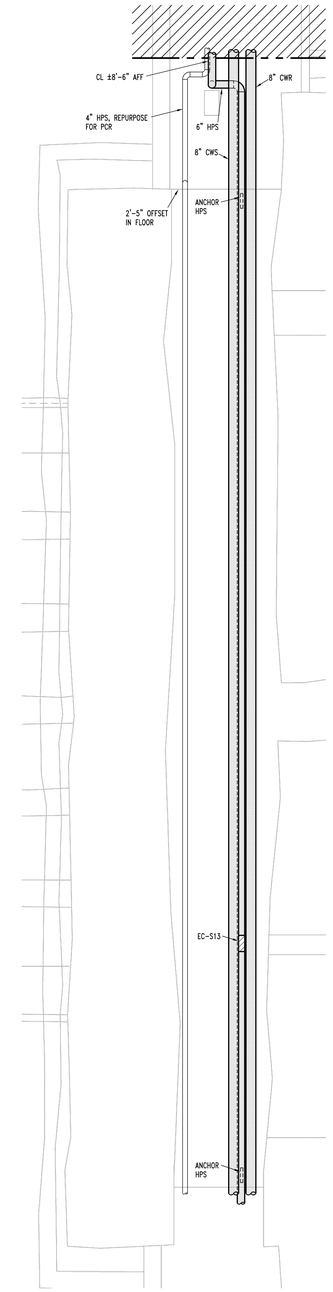

Connecting Tunnel Between
A1 NW and SW Mech. Vault
1/4"=1'-0"
HVAC Piping
N.

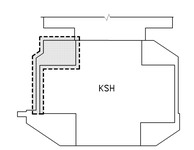

KEY PLAN
NO SCALE
N.

HTK ARCHITECTS PA
9300 W. 110TH ST. STE. 130
OVERLAND PARK, KANSAS 66210
P: 913.663.5373
9105 KANSAS AVE.
TOPEKA KANSAS 66612
P: 785.266.5973
WWW.HTKARCHITECTS.NET

LS&A
Latimer Sommers & Associates, P.A.
CONSULTING ENGINEERS
3639 SW Summerfield Drive, Suite A
Topeka, Kansas 66614-3974
Telephone: (785) 233-3232
FAX: (785) 233-0647
Email: lsapa@lsapa.com
LSA PROJECT NO. 1402032

WILLIAM R. GASSETT LICENSED 10530 PROFESSIONAL ENGINEER
4-15-15

DATE:
- 4-15-15

REVISED DATE:
- 12-18-14
- 2-9-15
- 3-10-15

HTK PROJECT NUMBER:
- 1410.03

Department of Administration
Office of Facilities and
Procurement Management
800 SW Jackson, Suite 700
Topeka, Kansas 66612-1216
Phone 785-296-8899
FAX 785-296-3456

STATE OF KANSAS
STATE OF KANSAS ENERGY & SERVICE CENTER
Seventh & Van Buren Street, Topeka, Kansas
BUILDING NUMBER 17300-000038
DATE: 4-15-15
DRAWN BY: CAD
CHECKED BY: WRB
REV: WRB

KSH MECHANICAL VAULT - HVAC PIPING

A-012651

MT303

CONSTRUCTION DOCUMENTS

JCSBC
2-2-2016
Att.9G--0125

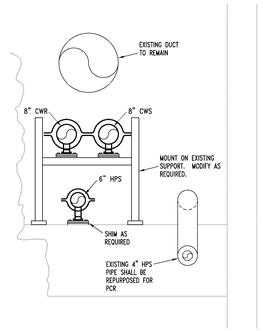

D4 Section - New Work
1/2"=1'-0"

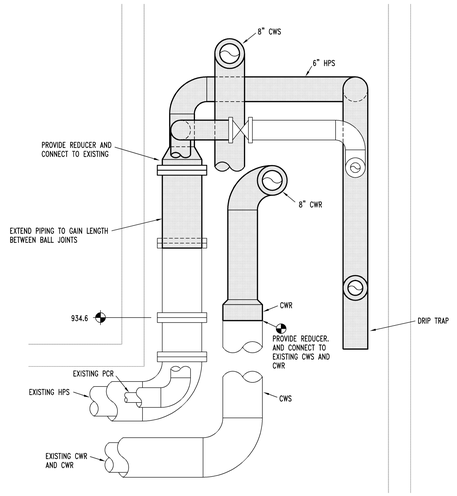

C4 Section - New Work
1/2"=1'-0"

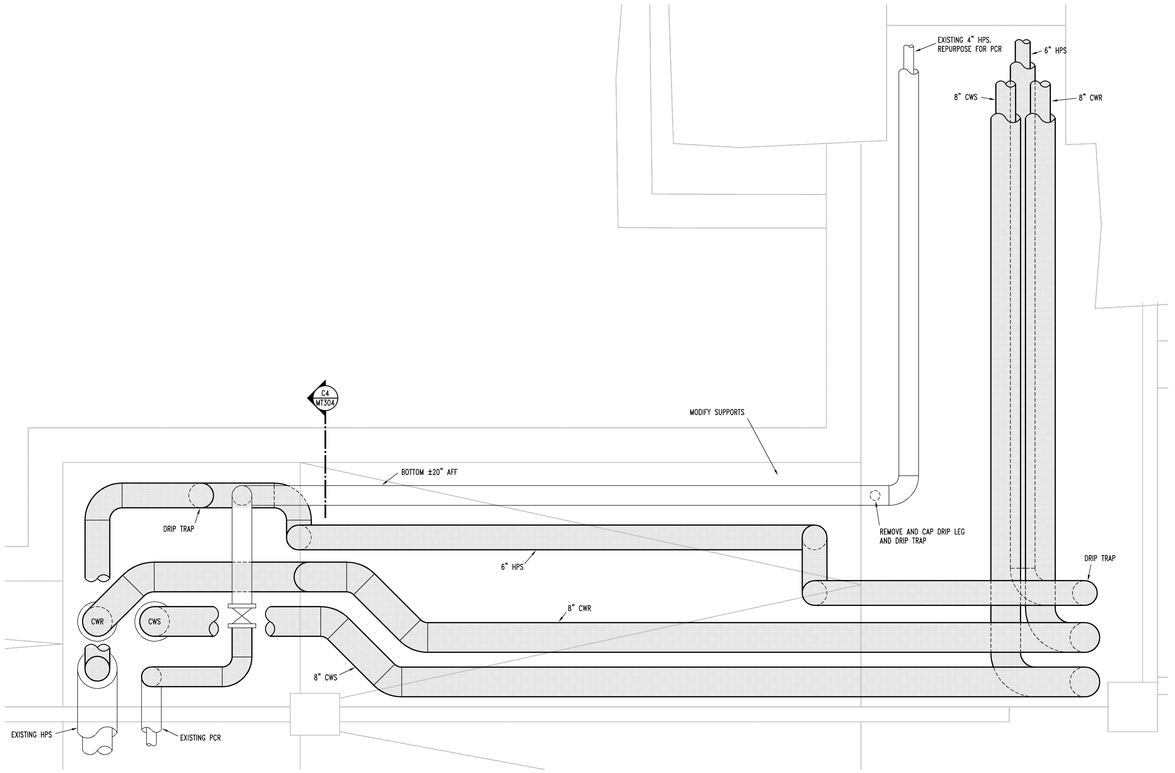

A2 Partial Floor Plan
1/2"=1'-0" HVAC Piping

N.

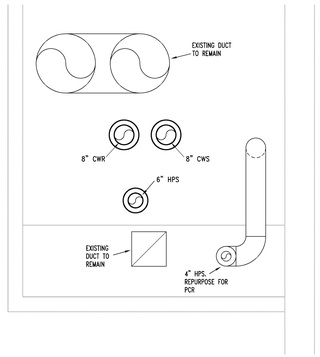

D3 Section - New Work
1/2"=1'-0"

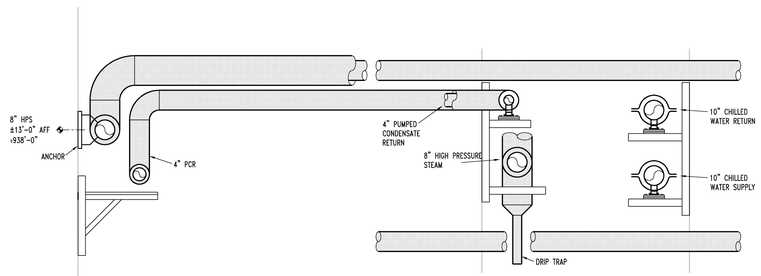

C1 Section - New Work
1/2"=1'-0"

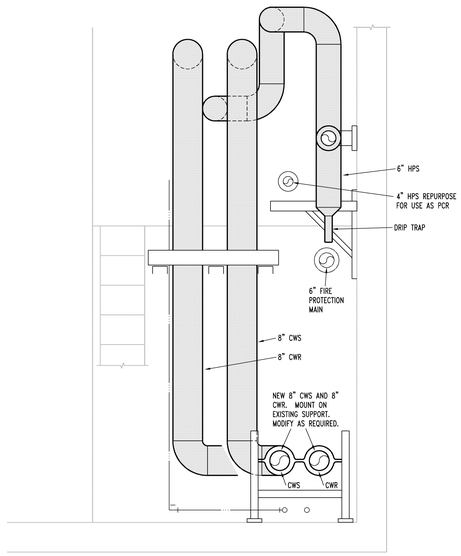

B1 Section - New Work
1/2"=1'-0"

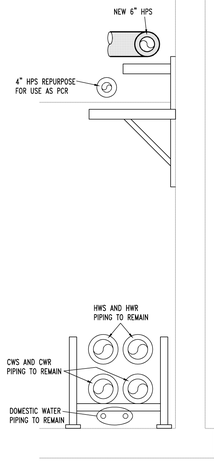

A1 Section - New Work
1/2"=1'-0"

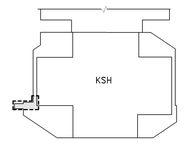

KEY PLAN
NO SCALE

N.

HTK ARCHITECTS PA
9300 W. 110TH ST. STE. 130
OVERLAND PARK, KANSAS 66210
P: 913.663.5373
WWW.HTKARCHITECTS.NET

LS&A
Latimer Sommers & Associates, P.A.
CONSULTING ENGINEERS
3639 SW Summerfield Drive, Suite A
Topeka, Kansas 66614-3974
Telephone: (785) 233-3232
FAX: (785) 233-0647
Email: lsapa@lsapa.com
LSA PROJECT NO. 1402032

WILLIAM R. GASSETT LICENSED 10530 REGISTERED PROFESSIONAL ENGINEER
4-15-15

DATE:
- 4-15-15

REVISED DATE:
- 1-21-14
- 2-9-15
- 3-10-15

HTK PROJECT NUMBER:
- 1410.03

Department of Administration
Office of Facilities and
Procurement Management
800 SW Jackson, Suite 700
Topeka, Kansas 66612-1216
Phone: 785-296-8899
FAX: 785-296-3456

STATE OF KANSAS
STATE OF KANSAS ENERGY & SERVICE CENTER
Seventh & Van Buren Street, Topeka, Kansas
BUILDING NUMBER 17300-000038
DRAWN BY: CAD CHECKED BY: WRB REV: WRB
DATE: 4-15-15

KSH MECHANICAL VAULT - HVAC PIPING

A-012651

MT304

CONSTRUCTION DOCUMENTS

JCSBC
2-2-2016
AIL9G--0126

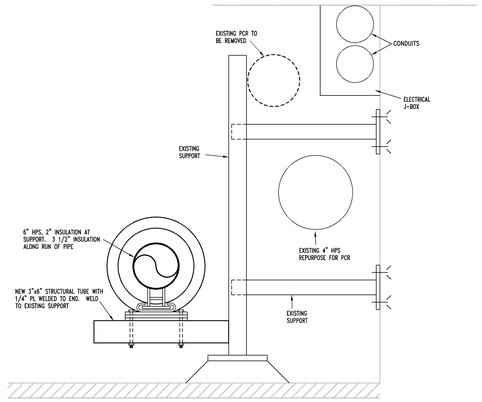

B4 Support Modification Detail
1 1/2"=1'-0"

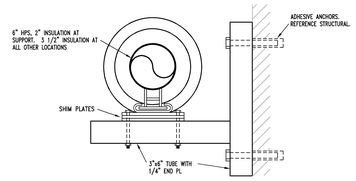

A4 Support Detail
1 1/2"=1'-0"

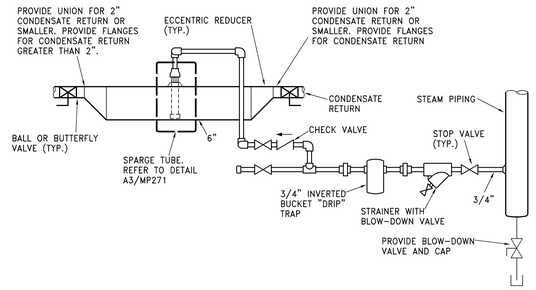

B3 Typical Drip Trap Detail
No Scale (locate at all change in vertical elevation and end of main)

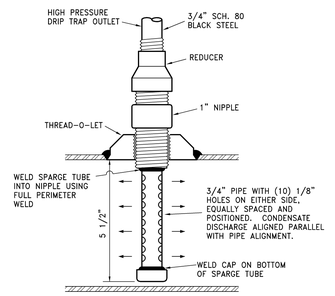

A3 Sparge Tube Detail
No Scale

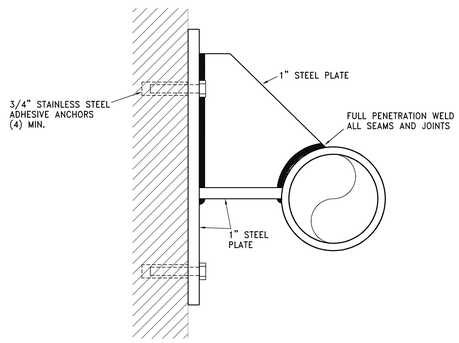

B1 Pipe Anchor Detail
No Scale

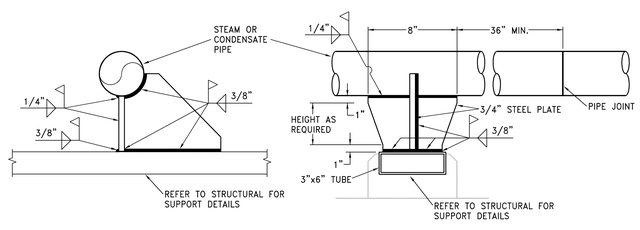

A1 Pipe Anchor Detail
(Refer to Structural)

HTK ARCHITECTS PA
9300 W 110TH ST STE 150
OVERLAND PARK KANSAS 66210
P: 913.663.5373
3905 KANSAS AVE
TOPEKA KANSAS 66612
P: 785.266.5373
WWW.HTKARCHITECTS.NET

LS&A
Latimer Sommers & Associates, P.A.
CONSULTING ENGINEERS
3639 SW Summerfield Drive, Suite A
Topeka, Kansas 66614-3974
Telephone: (785) 233-3232
FAX: (785) 233-0547
Email: lsapa@lsapa.com
LSA PROJECT NO. 1402032

WILLIAM R. BASSETT LICENSED 10530 REGISTERED ARCHITECT
4-15-15

DATE:
- 4-15-15

REVISED DATE:
- 1-21-8-14
- 2-9-15
- 3-10-15

HTK PROJECT NUMBER:
- 1410.03

Department of Administration
Office of Facilities and
Procurement Management
800 SW Jackson, Suite 700
Topeka, Kansas 666121216
Phone 785-296-8899
FAX 785-296-3456

STATE OF KANSAS
STATE OF KANSAS ENERGY & SERVICE CENTER
Seventh & Van Buren Street, Topeka, Kansas
BUILDING NUMBER 17300-00038
DRAWN BY: CAD
CHECKED BY: WRB
REV: WRB
DATE: 4-15-15

KSH MECHANICAL VAULT - HVAC PIPING

A-012651

MT305

CONSTRUCTION DOCUMENTS

JCSBC
2-2-2016
AtL9G--0127

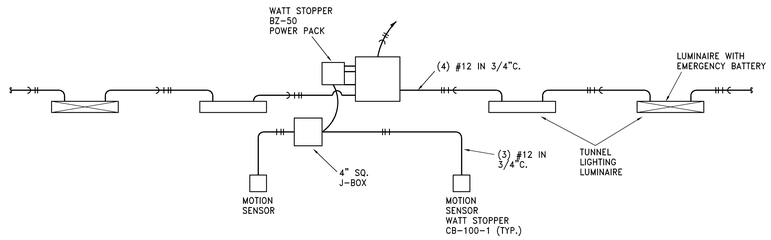

B3 Wiring Schematic - Tunnel Lighting
NO SCALE

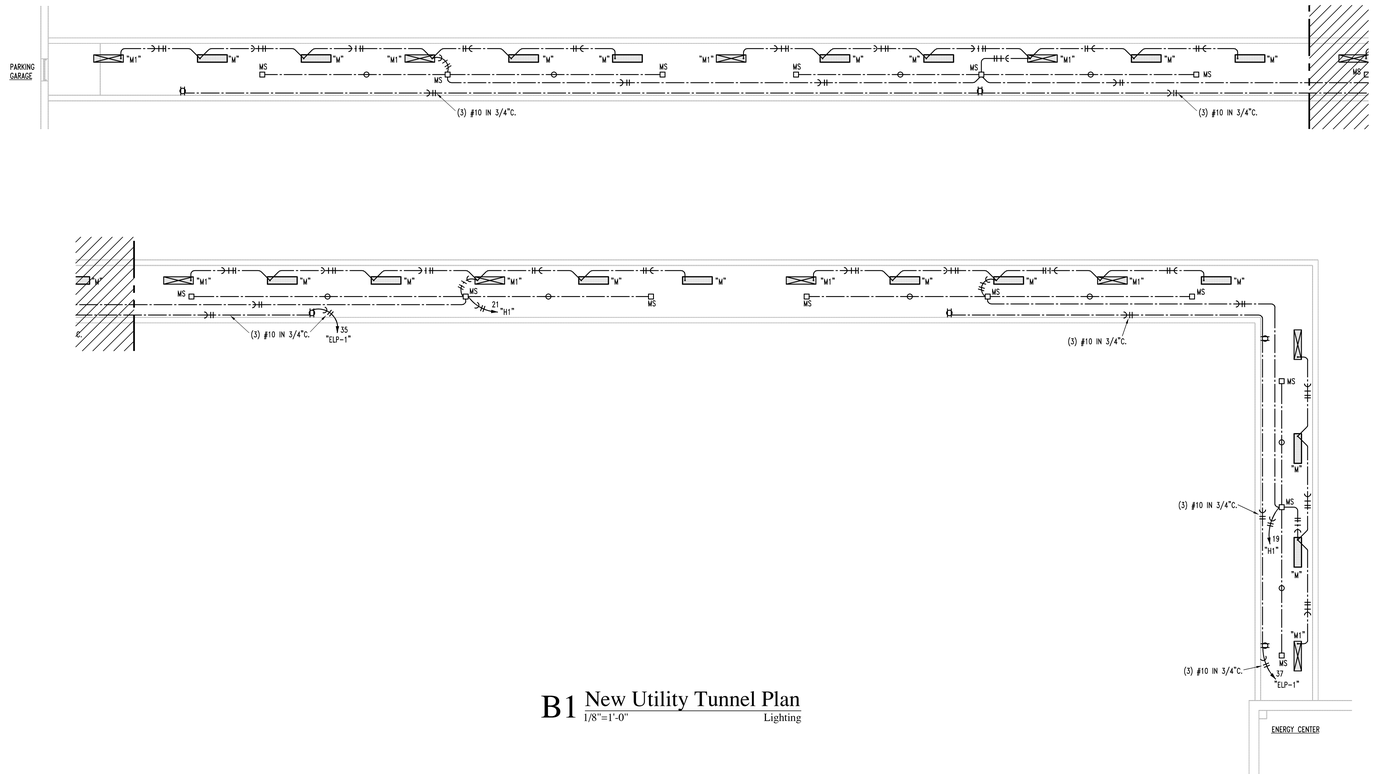

B1 New Utility Tunnel Plan
1/8"=1'-0" Lighting

HTK ARCHITECTS PA
9905 KANSAS AVE. TOPEKA KANSAS 66612 P: 785.266.5373
9300 W. 110TH ST. STE. 130 OVERLAND PARK KANSAS 66210 P: 913.663.5373
WWW.HTKARCHITECTS.NET

LS&A Latimer Sommers & Associates, P.A.
CONSULTING ENGINEERS
3639 SW Summerfield Drive, Suite A
Topeka, Kansas 66614-3974
Telephone: (785) 233-3232
FAX: (785) 233-0647
Email: lsapa@lsapa.com
LSA PROJECT NO. 1402032

WILLIAM R. BASSETT LICENSED 10530 PROFESSIONAL ENGINEER
4-15-15

DATE:
- 4-15-15

REVISED DATE:
- 12-18-14
- 2-9-15
- 3-10-15

HTK PROJECT NUMBER:
- 1410.03

Department of Administration
Office of Facilities and
Procurement Management
800 SW Jackson, Suite 700
Topeka, Kansas 66612-1216
Phone 785-296-8899
FAX 785-296-3456

STATE OF KANSAS
STATE OF KANSAS ENERGY & SERVICE CENTER
Seventh & Van Buren Street, Topeka, Kansas
BUILDING NUMBER 17300-000038
DRAWN BY: CAD CHECKED BY: WRB REV: WRB
DATE: 4-15-15

KEC UTILITY TUNNEL - ELECTRICAL

A-012651

EPT101

CONSTRUCTION DOCUMENTS

JCSBC
2-2-2016
Att.9G.--0128

... EPT101_New Tunnel Power.dwg 86 04/14/15 OTC 04/14/15 OTC

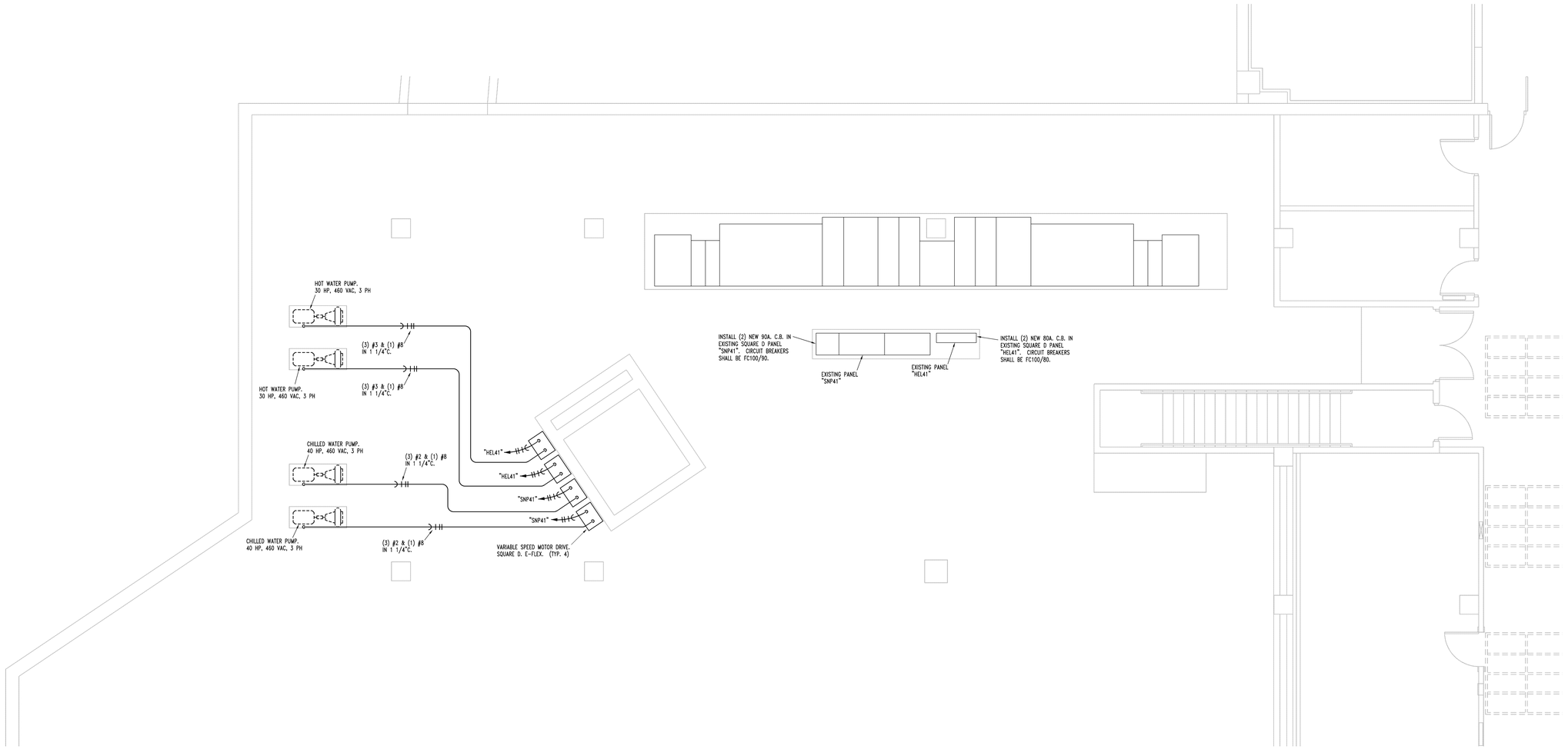

B1 Partial KSH NW Mechanical Vault
1/4"=1'-0" Power

N.

HTK ARCHITECTS PA
9205 KANSAS AVE. TOPEKA KANSAS 66612 P. 785.266.5973
3200 W. 110TH ST. STE. 150 OVERLAND PARK KANSAS 66210 P. 913.663.5373
WWW.HTKARCHITECTS.NET

LS&A
Latimer Sommers & Associates, P.A.
CONSULTING ENGINEERS
3639 SW Summerfield Drive, Suite A
Topeka, Kansas 66614-3974
Telephone: (785) 233-3232
FAX: (785) 233-0647
Email: lsapa@lsapa.com
LSA PROJECT NO. 1402032

WILLIAM R. BASSETT LICENSED 10530 PROFESSIONAL ENGINEER
4-15-15

DATE:
- 4-15-15

REVISED DATE:
- 1-2-18-14
- 2-9-15
- 3-10-15

HTK PROJECT NUMBER:
- 1410.03

Department of Administration
Office of Facilities and
Procurement Management
800 SW Jackson, Suite 700
Topeka, Kansas 66612-1216
Phone 785-296-8899
FAX 785-296-3456

STATE OF KANSAS
STATE OF KANSAS ENERGY & SERVICE CENTER
Seventh & Van Buren Street, Topeka, Kansas
BUILDING NUMBER 17300-000038

DATE: 4-15-15 DRAWN BY: CAD CHECKED BY: WRB REV: WRB

KSH NW MECHANICAL VAULT - ELECTRICAL

A-012651

EPT201

CONSTRUCTION DOCUMENTS

... EPT201_NW Mechanical Vault Power.dwg 48 04/14/15 OTC 48 04/14/15 OTC

JCSBC
2-2-2016
AtL9G--0129

PROJECT SPECIFICATIONS
Project No. A-012651
April 2015

PROJECT
State of Kansas Energy & Service Center
211 SW 7th Street
Topeka, Kansas 66612

OWNER
Kansas Department of Administration
800 SW Jackson, Suite 700
Topeka, Kansas 66612

ARCHITECT
Horst, Terrill & Karst, Architects, P.A.
900 S Kansas Ave., Suite 200
Topeka, Kansas 66612
(785) 266-5373
Fax: (785) 266-5270

STRUCTURAL ENGINEER
Bob D. Campbell & Co.
4338 Belleview
Kansas City, Mo. 64111
(816) 531-4144

CIVIL ENGINEER
Schmidt, Beck & Boyd Engineering, LLC
1415 SW Topeka, Blvd.
Topeka, Kansas 66612
(785) 215-8630

MEP ENGINEERS
Latiment Sommers & Associates, P.A.
3639 SW Summerfield Drive, Suite A
Topeka, Kansas 66614
(785) 233-3232

TITLE PAGE

Contract Documents © 2014 Horst, Terrill & Karst Architects, P.A.

ARCHITECT'S PROFESSIONAL SEAL

The drawings, specifications, and other documents referenced in the enclosed Table of Contents for this project (identified in the header above) have been prepared by or under the direct supervision of the following licensed architect(s), with the exception of the following: portions of Divisions 3, 5, 11, and 31-33 specifications, the entire Divisions 21-28 specifications, and the drawings identified as "Civil", "Structural", "Mechanical" and "Electrical". Those documents pertain directly to the work of the consultants involved with this project, who will separately identify and seal the work for which they are responsible.

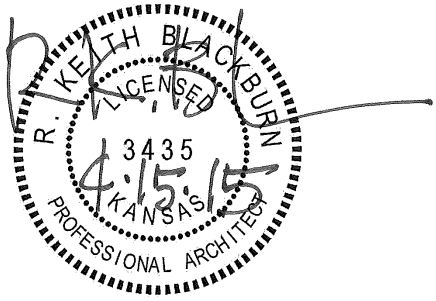

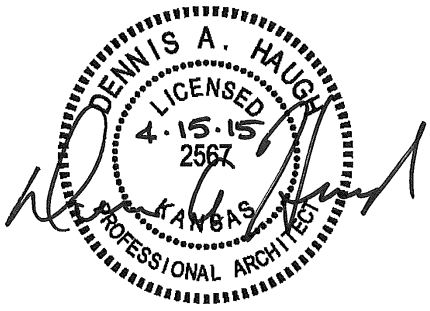

CIVIL ENGINEER'S PROFESSIONAL SEAL

The drawings, specifications, and other documents referenced below have been prepared by or under the direct supervision of the following licensed civil engineer.

Civil Construction Drawings:

C050 - Demolition & Construction Phasing Plan – Phase IA & IB
C051 - Demolition & Construction Phasing Plan – Phase II
C052 - Historical Drawing
C100 - Site Plan
C101 - Tunnel Plan & Profile
C102 - Site Details I
C103 - Site Details II
C200 - Grading Plan
C300 - Utility Plan
C301 - Sewer Details
C302 - Manhole Details
C303 - Water Details
C400 - Traffic Control Plan – Phase IA & IB
C401 - Traffic Control Plan – Phase II
C402 - Traffic Control Details I
C403 - Traffic Control Details II
C404 - Traffic Control Details III
C500 - Erosion Control Plan
C501 - Erosion Control Details I



Civil Specifications:

221113 - Facility Water Distribution Piping
221313 - Facility Sanitary Sewers
311000 - Site Clearing
312000 - Earth Moving
312319 – Dewatering
315000 – Excavation & Support
321216 – Asphalt Paving
321313 – Concrete Paving
321373 - Concrete Paving Joint Sealants
334100 - Storm Utility Drainage Piping

STRUCTURAL ENGINEER'S PROFESSIONAL SEAL



MECHANICAL/ELECTRICAL ENGINEER'S PROFESSIONAL SEAL



TABLE OF CONTENTS

VOLUME 1

Document A	Notice to Bidders	A-1 – 2
Document B	Instructions to Bidders	B-1 – 6
Document C	Form of Bid	C-1 – 3
Document D	General Conditions of the Contract	D-1 – 30
Document E	Supplemental General Conditions	E-1 – 3
Document F	Form of Contract (DA-141A)	F-1 – 2
Document G	Form of Performance Bond	G-1 – 1
Document H	Form of Public Works Bond	H-1 – 1
Document I	Form of Appointment of Service Agent	I-1 – 1

DIVISION 01 – GENERAL REQUIREMENTS

Section 01 2500	Substitution Procedures	01 2500-1 - 3
Section 01 2600	Contract Modification Procedures	01 2600-1 - 2
Section 01 2900	Payment Procedures	01 2900-1 - 3
Section 01 3100	Project Management and Coordination	01 3100-1 - 5
Section 01 3200	Construction Progress Documentation	01 3200-1 - 4
Section 01 3300	Submittal Procedures	01 3300-1 - 11
Section 01 3516	Alteration Project Procedures	01 3516-1 - 6
Section 01 4000	Quality Requirements	01 4000-1 - 7
Section 01 4200	References	01 4200-1 - 3
Section 01 4529	Structural Testing Laboratory Services	01 4529-1 - 19
Section 01 5000	Temporary Facilities and Controls	01 5000-1 - 10
Section 01 6000	Product Requirements	01 6000-1 - 3
Section 01 7300	Execution	01 7300-1 - 6
Section 01 7419	Construction Waste Management and Disposal	01 7419-1 - 11
Section 01 7700	Closeout Procedures	01 7700-1 - 4
Section 01 7823	Operation and Maintenance Data	01 7823-1 - 8
Section 01 7839	Project Record Documents	01 7839-1 - 3
Section 01 7900	Demonstration and Training	01 7900-1 - 4

DIVISION 02 – EXISTING CONDITIONS

Section 024119	Selective Demolition	024119-1 - 5

DIVISION 03 – CONCRETE

Section 03 3000	Cast-In-Place Concrete	03 3000-1 – 20
Section 03 5300	Concrete Topping	03 5300-1 - 3

DIVISION 04 – MASONRY

Section 04 2000	Unit Masonry	04 2000-1 - 17
Section 04 4200	Exterior Stone Cladding	04 2000-1 – 12
Section 04 7200	Cast Stone Masonry	04 4300-1 - 6

DIVISION 05 – METALS

Section 05 1200 Structural Steel Framing ..... 05 1200-1 - 9
Section 05 2100 Steel Joist Framing ..... 05-2100-1 - 3
Section 05 3100 Steel Decking ..... 05 3100-1 - 5
Section 05 4000 Cold Formed Metal Framing ..... 05 4000-1 - 9
Section 05 5000 Metal Fabrications ..... 05 5000-1 - 9
Section 05 5100 Metal Stairs ..... 05 5100-1 – 6
Section 05 5113 Metal Pan Stairs ..... 05 5113-1 - 8
Section 05 5213 Pipe And Tube Railings ..... 05 5213-1 – 7
Section 05 7300 Decorative Metal Railings ..... 05 7300-1 - 9
Section 05 7500 Decorative Formed Metal ..... 05 7500-1 - 5

DIVISION 06 – WOOD, PLASTICS, AND COMPONENTS

Section 06 1053 Miscellaneous Rough Carpentry ..... 06 1053-1 - 8
Section 06 4023 Interior Architectural Woodwork ..... 06 4023-1 - 10

DIVISION 07 – THERMAL AND MOISTURE PROTECTION

Section 07 1113 Bituminous Damproofing ..... 071113-1 - 3
Section 07 1326 Self-Adhering Sheet Waterproofing ..... 07 1326-1 - 5
Section 07 2100 Thermal Insulation ..... 07 2100-1 - 5
Section 07 2726 Fluid-Applied Membrane Air Barriers ..... 07 2726-1 - 7
Section 07 4213 Metal Wall and Soffit Panels ..... 07 4213-1 - 12
Section 07 4213.23 Metal Composite Material Wall Panels ..... 07 4213.23-1 - 7
Section 07 5423 Thermoplastic Polyolefin (TPO) Roofing ..... 07 5423-1 - 9
Section 07 6200 Sheet Metal Flashing And Trim ..... 07 6200-1 - 10
Section 07 7200 Roof Accessories ..... 07 7200-1 - 5
Section 07 8413 Penetration Firestopping ..... 07 8413-1 – 7
Section 07 8443 Joint Firestopping ..... 07 8443-1 - 6
Section 07 9200 Joint Sealants ..... 07 9200-1 - 9
Section 07 9500 Expansion Control ..... 07 9500-1 - 6

DIVISION 08 – OPENINGS

Section 08 1113 Hollow Metal Doors and Frames ..... 08 1113-1 - 11
Section 08 1416 Flush Wood Doors ..... 08 1416-1 - 7
Section 08 3113 Access Doors and Frames ..... 08 3113-1 - 4
Section 08 3213 Sliding Aluminum-Framed Glass Doors ..... 08 3213-1 - 5
Section 08 3323 Overhead Coiling Doors ..... 08 3323-1 – 12
Section 08 3613 Sectional Doors ..... 08 3613-1 - 8
Section 08 4113 Aluminum-Framed Entrances and Storefronts ..... 08 4113-1 - 10
Section 08 4413 Glazed Aluminum Curtain Walls ..... 08 4413-1 – 9
Section 08 5653 Security Windows ..... 08 5653-1 - 3
Section 08 7100 Door Hardware ..... 08 7100-1 – 29
Section 08 7113 Automatic Door Operators ..... 08 7113-1 - 7
Section 08 8000 Glazing ..... 08 8000-1 - 9
Section 08 8300 Mirrors ..... 08 8300-1 – 6
Section 08 9119 Fixed Louvers ..... 08 9119-1 - 4

DIVISION 09 – FINISHES

Section 09 2216 Non-Structural Metal Framing ..... 09 2216-1 – 6
Section 09 2900 Gypsum Board Assemblies ..... 09 2900-1 - 7
Section 09 3000 Tiling & Shower Accessories ..... 09 3000-1 - 8

Section 09 5113 Acoustical Panel Ceilings ..... 09 5113-1 - 7
Section 09 6513 Resilient Base And Accessories ..... 09 6513-1 - 6
Section 09 6813 Tile Carpeting ..... 09 6813-1 - 6
Section 09 6900 Access Flooring .....09 6900-1 - 5
Section 09 9113 Exterior Painting..... 09 9113-1 – 5
Section 09 9123 Interior Painting..... 09 9123-1 - 8
Section 09 9635 Secondary Containment Coating System..... 09 9635-1 - 8

DIVISION 10 – SPECIALTIES

Section 10 1400 Signage .....10 1400-1 - 7
Section 10 2113 Toilet Compartments .....10 2113-1 – 5
Section 10 2213 Wire Mesh Partitions.....10 2226-1 – 6
Section 10 2600 Wall and Door Protection.....10 2600-1 – 4
Section 10 2800 Toilet, Bath, And Laundry Accessories .....10 2800-1 - 5
Section 10 4413 Fire Extinguisher Cabinets .....10 4413-1 -5
Section 10 4416 Fire Extinguishers ..... 10 4416-1 - 2
Section 10 5113 Metal Lockers .....10 5113-1 - 6
Section 10 5300 Pre-Manufactured Aluminum Canopies .....10 5300-1 - 7
Section 10 7500 Flagpoles .....10 7500-1 - 4

DIVISION 11 – EQUIPMENT – NOT USED

DIVISION 12 – FURNISHINGS

Section 12 2413 Roller Window Shades .....12 2413-1 - 8

DIVISION 13 – NOT USED

DIVISION 14 – NOT USED

Section 14 2400 Hydraulic Elevator.....14 2400-1 - 9

VOLUME 2

DIVISION 21 – FIRE SUPPRESSION

Section 21 0500 Automatic Fire Sprinkler System General Provisions ..... 21 0500-1 - 5
Section 21 0501 Automatic Fire Sprinkler System..... 21 0500-1 - 10

DIVISION 22 – PLUMBING

Section 22 0500 Plumbing General Provisions..... 22 0500-1 - 5
Section 22 0501 Extent of Contract Work and Codes ..... 22 0501-1 - 2
Section 22 0503 Basic Materials and Methods..... 22 0503-1 - 4
Section 22 0519 Thermometer and Gauges..... 22 0519-1 - 2
Section 22 0523 Valves ..... 22 0523-1 - 3
Section 22 0524 Piping Specialties..... 22 0524-1 - 2
Section 22 0529 Supports, Anchors, Sleeves and Seals ..... 22 0529-1 - 3
Section 22 0548 Seismic Protection ..... 22 0548-1 – 50
Section 22 0700 Piping and Equipment Insulation ..... 22 0700-1 - 3
Section 22 1113 Facility Water Distribution Piping ..... 22 1113-1 - 9

Section 22 1116 Piping and Fittings ..... 22 1116-1 - 7
Section 22 1313 Facility Sanitary Sewers ..... 22 1313-1 - 16
Section 22 1314 Sanitary Sewer Lift Station ..... 22 1314-1 - 11
Section 22 3600 Plumbing ..... 22 3600-1 - 1
Section 22 4000 Plumbing Fixtures ..... 22 4000-1 - 1
Section 22 5000 Plumbing Equipment ..... 22 5000-1 - 3
Section 22 9000 Architectural Verification ..... 22 9000-1 - 1

DIVISION 23 – HEATING VENTILATING AND AIR CONDITIONING

Section 23 0500 Mechanical General Provisions ..... 23 0500-1 - 5
Section 23 0501 Extent of Contract Work and Codes ..... 23 0501-1 - 2
Section 23 0502 Temporary Use of Permanent Heating Units ..... 23 0502-1 - 1
Section 23 0503 Basic Materials and Methods ..... 23 0503-1 - 5
Section 23 0513 Electrical Requirements ..... 23 0513-1 - 1
Section 23 0519 Thermometers and Gauges ..... 23 0519-1 - 2
Section 23 0523 Valves ..... 23 0523-1 - 6
Section 23 0524 Piping Specialties ..... 23 0524-1 - 2
Section 23 0529 Supports, Anchors, Sleeves and Seals ..... 23 0529-1 - 3
Section 23 0548 Seismic Protection (Refer To Section 22 0548) ..... 23 0548-1 - 1
Section 23 0550 Mechanical Sound and Vibration Control ..... 23 0550-1 - 3
Section 23 0700 Piping and Equipment Insulation ..... 23 0700-1 - 2
Section 23 0701 Ductwork Insulation ..... 23 0701-1 - 2
Section 23 0900 Facilities Management System ..... 23 0900-1 - 34
Section 23 2113 Piping and Fittings ..... 23 2113-1 - 7
Section 23 2114 Vertical Bore Hole Closed-Loop Ground-Coupled Heat Exchanger ..... 23 2114-1 - 15
Section 23 2123 HVAC Pumps ..... 23 2123-1 - 1
Section 23 2500 Water Treatment ..... 23 2500-1 - 1
Section 23 3113 Ductwork ..... 23 3113-1 - 2
Section 23 3300 Ductwork Accessories ..... 23 3300-1 - 2
Section 23 3416 Exhaust Fans ..... 23 3416-1 - 3
Section 23 3600 High Efficiency Ground Source Heat Pumps ..... 23 3600-1 - 3
Section 23 3620 Water To Water Heat Pumps ..... 23 3620-1 - 2
Section 23 3713 Grilles, Registers and Diffusers ..... 23 3713-1 - 1
Section 23 5533 Infrared Radiant Tube Heaters ..... 23 5533-1 - 3
Section 23 5600 Dedicated Outdoor Air Energy Recovery Heat Pump Units ..... 23 5600-1 - 3
Section 23 7339 Direct Gas Fired Makeup Air Unit ..... 23 7339-1 - 3
Section 23 8316 Radiant Heating Hydronic Piping (REHAU Radiant Heating Systems) ..... 23 8316-1 - 8
Section 23 9000 Architectural Verification ..... 23 9000-1 - 1

DIVISION 26 – ELECTRICAL

Section 26 0500 Electrical General Provisions ..... 26 0500-1 - 5
Section 26 0501 Extent of Contract Work and Codes ..... 26 0501-1 - 2
Section 26 0502 Basic Materials and Methods ..... 26 0502-1 - 2
Section 26 0519 Wires and Cables ..... 26 0519-1 - 2
Section 26 0526 Grounding ..... 26 0526-1 - 2
Section 26 0533 Conduits ..... 26 0533-1 - 4
Section 26 0534 Outlet, Pull and Junction Boxes ..... 26 0534-1 - 2
Section 26 0548 Seismic Protection (Refer To Section 220548) ..... 26 0548-1 - 1
Section 26 0923 Lighting Control Devices ..... 26 0923-1 - 8
Section 26 0933 Central Lighting Controls ..... 26 0933-1 - 8
Section 26 2200 Dry Type Transformers ..... 26 2200-1 - 2

Section 26 2413 Switchboards ..... 26 2413-1 - 2
Section 26 2416 Circuit Breaker Distribution Panelboards ..... 26 2416-1 - 3
Section 26 2417 Panelboards ..... 26 2417-1 - 2
Section 26 2726 Switches, Receptacles and Cover Plates ..... 26 2726-1 - 3
Section 26 2816 Overcurrent Protective Devices ..... 26 2816-1 - 1
Section 26 2817 Disconnect Switches ..... 26 2817-1 - 1
Section 26 2913 Motor Starters ..... 26 2913-1 - 2
Section 26 3000 Motors ..... 26 3000-1 - 2
Section 26 3213 Emergency/Standby Power Systems Generator Set ..... 26 3213-1 -13
Section 26 3223 Bypass Isolation Transfer Switches ..... 26 3223-1 - 7
Section 26 3353 Uninterruptible Power Supply ..... 26 3353-1 -12
Section 26 4313 Surge Protective Devices (SPD) ..... 26 4313-1 - 5
Section 26 5100 Lighting Fixtures ..... 26 5100-1 - 2
Section 26 5101 Lamps and Lamp Ballasts ..... 26 5101-1 - 2
Section 26 5600 Security/Access Control System ..... 26 5600-1 - 30
Section 26 9000 Architectural Verification ..... 26 9000-1 - 1

DIVISION 27 – COMMUNICATIONS

Section 27 0500 Telecommunications General Provisions ..... 27 0500-1 - 5
Section 27 0533 Cable Trays ..... 27 0533-1 - 4
Section 27 1000 Telecommunications ..... 27 1000-1 - 15
Section 27 2000 Audio Visual ..... 27 2000-1 - 4

DIVISION 28 – ELECTRONIC SAFETY AND SECURITY

Section 28 3000 Fire Alarm General Provisions ..... 28 3000-1 - 5
Section 28 3111 Fire Alarm System ..... 28 3111-1 - 13

DIVISION 31 – EARTHWORK

Section 31 1000 Site Clearing ..... 31 1000-1 - 3
Section 31 2000 Earth Moving ..... 31 2000-1 - 25
Section 31 2000 Appendix A, B & C - Geotechnical Engineering Report Boring Logs ..... 31 2000-1 - 54
Section 31 2319 Dewatering ..... 31 2319-1 - 5
Section 31 5000 Excavation & Support ..... 31 5000-1 - 5

Section 31 3116 Termite Control ..... 31 3116-1 - 3

DIVISION 32 – EXTERIOR IMPROVEMENTS

Section 32 1216 Asphalt Paving ..... 32 1216-1 - 7
Section 32 1313 Concrete Paving ..... 32 1313-1 - 12
Section 32 1373 Concrete Pavement Joint Sealants ..... 32 3173-1 - 4
Section 32 9200 Turf and Grasses ..... 32 9200-1 - 10
Section 32 9300 Plants ..... 32 9300-1 - 15

DIVISION 33 – UTILITIES

Section 33 4100 Storm Utility Drainage Piping ..... 33 4100-1 - 15
Section 33 4600 Subdrainage ..... 33 4600-1 - 4

END OF TABLE OF CONTENTS

SECTION 012500 - SUBSTITUTION PROCEDURES

PART 1 - GENERAL

1.1 RELATED DOCUMENTS

A. Drawings and general provisions of the Contract, including General and Supplementary Conditions and other Division 01 Specification Sections, apply to this Section.

1.2 SUMMARY

A. Section includes administrative and procedural requirements for substitutions.

B. Related Requirements:

1. Section 012300 "Alternates" for products selected under an alternate.
2. Section 016000 "Product Requirements" for requirements for submitting comparable product submittals for products by listed manufacturers.

1.3 DEFINITIONS

A. Substitutions: Changes in products, materials, equipment, and methods of construction from those required by the Contract Documents and proposed by Contractor.

1. Substitutions for Cause: Changes proposed by Contractor that are required due to changed Project conditions, such as unavailability of product, regulatory changes, or unavailability of required warranty terms.
2. Substitutions for Convenience: Changes proposed by Contractor or Owner that are not required in order to meet other Project requirements but may offer advantage to Contractor or Owner.

1.4 ACTION SUBMITTALS

A. Substitution Requests: Submit three copies of each request for consideration. Identify product or fabrication or installation method to be replaced. Include Specification Section number and title and Drawing numbers and titles.

1. Substitution Request Form: Use CSI Form 13.1A (online download)
2. Documentation: Show compliance with requirements for substitutions and the following, as applicable:

a. Statement indicating why specified product or fabrication or installation cannot be provided, if applicable.
b. Coordination information, including a list of changes or revisions needed to other parts of the Work and to construction performed by Owner and separate contractors, that will be necessary to accommodate proposed substitution.
c. Detailed comparison of significant qualities of proposed substitution with those of the Work specified. Include annotated copy of applicable Specification Section. Significant qualities may include attributes such as performance, weight, size, durability, visual effect, sustainable design characteristics, warranties, and specific features and requirements indicated. Indicate deviations, if any, from the Work specified.
d. Product Data, including drawings and descriptions of products and fabrication and installation procedures.
e. Samples, where applicable or requested.
f. Certificates and qualification data, where applicable or requested.
g. List of similar installations for completed projects with project names and addresses and names and addresses of architects and owners.

h. Material test reports from a qualified testing agency indicating and interpreting test results for compliance with requirements indicated.
i. Research reports evidencing compliance with building code in effect for Project, from [ICC-ES] <Insert applicable code organization>.
j. Detailed comparison of Contractor's construction schedule using proposed substitution with products specified for the Work, including effect on the overall Contract Time. If specified product or method of construction cannot be provided within the Contract Time, include letter from manufacturer, on manufacturer's letterhead, stating date of receipt of purchase order, lack of availability, or delays in delivery.
k. Cost information, including a proposal of change, if any, in the Contract Sum.
l. Contractor's certification that proposed substitution complies with requirements in the Contract Documents except as indicated in substitution request, is compatible with related materials, and is appropriate for applications indicated.
m. Contractor's waiver of rights to additional payment or time that may subsequently become necessary because of failure of proposed substitution to produce indicated results.

3. Architect's Action: If necessary, Architect will request additional information or documentation for evaluation within [seven] <Insert number> days of receipt of a request for substitution. Architect will notify Contractor[through Construction Manager] of acceptance or rejection of proposed substitution within [15] <Insert number> days of receipt of request, or [seven] <Insert number> days of receipt of additional information or documentation, whichever is later.

a. Forms of Acceptance: Change Order, Construction Change Directive, or Architect's Supplemental Instructions for minor changes in the Work.
b. Use product specified if Architect does not issue a decision on use of a proposed substitution within time allocated.

1.5 QUALITY ASSURANCE

A. Compatibility of Substitutions: Investigate and document compatibility of proposed substitution with related products and materials. Engage a qualified testing agency to perform compatibility tests recommended by manufacturers.

1.6 PROCEDURES

A. Coordination: Revise or adjust affected work as necessary to integrate work of the approved substitutions.

PART 2 - PRODUCTS

2.1 SUBSTITUTIONS

A. Substitutions for Cause: Submit requests for substitution immediately on discovery of need for change, but not later than **15** days prior to time required for preparation and review of related submittals.

1. Conditions: Architect will consider Contractor's request for substitution when the following conditions are satisfied. If the following conditions are not satisfied, Architect will return requests without action, except to record noncompliance with these requirements:

a. Requested substitution is consistent with the Contract Documents and will produce indicated results.
b. Requested substitution provides sustainable design characteristics that specified product provided [for achieving LEED prerequisites and credits, if applicable].
c. Substitution request is fully documented and properly submitted.
d. Requested substitution will not adversely affect Contractor's construction schedule.

e. Requested substitution has received necessary approvals of authorities having jurisdiction.
f. Requested substitution is compatible with other portions of the Work.
g. Requested substitution has been coordinated with other portions of the Work.
h. Requested substitution provides specified warranty.
i. If requested substitution involves more than one contractor, requested substitution has been coordinated with other portions of the Work, is uniform and consistent, is compatible with other products, and is acceptable to all contractors involved.

B. Substitutions for Convenience: Not allowed.

PART 3 - EXECUTION (Not Used)

END OF SECTION 012500

SECTION 012600 - CONTRACT MODIFICATION PROCEDURES

PART 1 - GENERAL

1.1 RELATED DOCUMENTS

A. Drawings and general provisions of the Contract, including General and Supplementary Conditions and other Division 01 Specification Sections, apply to this Section.

1.2 SUMMARY

A. Section includes administrative and procedural requirements for handling and processing Contract modifications.

1.3 MINOR CHANGES IN THE WORK

A. Architect will issue supplemental instructions authorizing minor changes in the Work, not involving adjustment to the Contract Sum or the Contract Time, on AIA Document G710, "Architect's Supplemental Instructions."

1.4 PROPOSAL REQUESTS

A. Owner-Initiated Proposal Requests: Architect will issue a detailed description of proposed changes in the Work that may require adjustment to the Contract Sum or the Contract Time. If necessary, the description will include supplemental or revised Drawings and Specifications.

1. Work Change Proposal Requests issued by Architect are not instructions either to stop work in progress or to execute the proposed change.
2. Within time specified in Proposal Request or 20 days, when not otherwise specified after receipt of Proposal Request, submit a quotation estimating cost adjustments to the Contract Sum and the Contract Time necessary to execute the change.
    a. Include a list of quantities of products required or eliminated and unit costs, with total amount of purchases and credits to be made. If requested, furnish survey data to substantiate quantities.
    b. Indicate applicable taxes, delivery charges, equipment rental, and amounts of trade discounts.
    c. Include costs of labor and supervision directly attributable to the change.
    d. Include an updated Contractor's construction schedule that indicates the effect of the change, including, but not limited to, changes in activity duration, start and finish times, and activity relationship. Use available total float before requesting an extension of the Contract Time.
    e. Quotation Form: Use CSI Form 13.6D, "Proposal Worksheet Summary," and Form 13.6C, "Proposal Worksheet Detail."

B. Contractor-Initiated Proposals: If latent or changed conditions require modifications to the Contract, Contractor may initiate a claim by submitting a request for a change to Architect.

1. Include a statement outlining reasons for the change and the effect of the change on the Work. Provide a complete description of the proposed change. Indicate the effect of the proposed change on the Contract Sum and the Contract Time.
2. Include a list of quantities of products required or eliminated and unit costs, with total amount of purchases and credits to be made. If requested, furnish survey data to substantiate quantities.
3. Indicate applicable taxes, delivery charges, equipment rental, and amounts of trade discounts.
4. Include costs of labor and supervision directly attributable to the change.

5. Include an updated Contractor's construction schedule that indicates the effect of the change, including, but not limited to, changes in activity duration, start and finish times, and activity relationship. Use available total float before requesting an extension of the Contract Time.
6. Comply with requirements in Section 012500 "Substitution Procedures" if the proposed change requires substitution of one product or system for product or system specified.
7. Proposal Request Form: Use CSI Form 13.6A, "Change Order Request (Proposal)," with attachments CSI Form 13.6D, "Proposal Worksheet Summary," and Form 13.6C, "Proposal Worksheet Detail."

1.5 ADMINISTRATIVE CHANGE ORDERS

A. Unit-Price Adjustment: See Section 012200 "Unit Prices" for administrative procedures for preparation of Change Order Proposal for adjusting the Contract Sum to reflect measured scope of unit-price work.

1.6 CHANGE ORDER PROCEDURES

A. On Owner's approval of a Work Changes Proposal Request, Architect will issue a Change Order for signatures of Owner and Contractor on AIA Document G701.

1.7 CONSTRUCTION CHANGE DIRECTIVE

A. Construction Change Directive: Architect may issue a Construction Change Directive on AIA Document G714. Construction Change Directive instructs Contractor to proceed with a change in the Work, for subsequent inclusion in a Change Order.

1. Construction Change Directive contains a complete description of change in the Work. It also designates method to be followed to determine change in the Contract Sum or the Contract Time.

B. Documentation: Maintain detailed records on a time and material basis of work required by the Construction Change Directive.

1. After completion of change, submit an itemized account and supporting data necessary to substantiate cost and time adjustments to the Contract.

PART 2 - PRODUCTS (Not Used)

PART 3 - EXECUTION (Not Used)

END OF SECTION 012600

SECTION 012900 - PAYMENT PROCEDURES

PART 1 - GENERAL

1.1 RELATED DOCUMENTS

A. Drawings and general provisions of the Contract, including General and Supplementary Conditions and other Division 01 Specification Sections, apply to this Section.

1.2 SUMMARY

A. Section includes administrative and procedural requirements necessary to prepare and process Applications for Payment.

1.3 DEFINITIONS

A. Schedule of Values: A statement furnished by Contractor allocating portions of the Contract Sum to various portions of the Work and used as the basis for reviewing Contractor's Applications for Payment.

1.4 SCHEDULE OF VALUES

A. Coordination: Coordinate preparation of the schedule of values with preparation of Contractor's construction schedule. **Cost-loaded Critical Path Method Schedule may serve to satisfy requirements for the schedule of values.**

1. Coordinate line items in the schedule of values with other required administrative forms and schedules, including the following:

a. Application for Payment forms with continuation sheets.
b. Submittal schedule.
c. Items required to be indicated as separate activities in Contractor's construction schedule.

B. Format and Content: Use Project Manual table of contents as a guide to establish line items for the schedule of values. Provide at least one line item for each Specification Section.

1. Arrange schedule of values consistent with format of AIA Document G703.
2. Arrange the schedule of values in tabular form with separate columns to indicate the following for each item listed:

a. Related Specification Section or Division.
b. Description of the Work.
c. Name of subcontractor.
d. Name of manufacturer or fabricator.
e. Name of supplier.
f. Change Orders (numbers) that affect value.
g. Dollar value of the following, as a percentage of the Contract Sum to nearest one-hundredth percent, adjusted to total 100 percent.

1) Labor.
2) Materials.
3) Equipment.

3. Provide a breakdown of the Contract Sum in enough detail to facilitate continued evaluation of Applications for Payment and progress reports. Coordinate with Project Manual table of contents. Provide multiple line items for principal subcontract amounts in excess of **five** percent of the Contract Sum.

a. Include separate line items under **Contractor and** principal subcontracts for Project closeout requirements in an amount totaling **five** percent of the Contract Sum and subcontract amount.

4. Round amounts to nearest whole dollar; total shall equal the Contract Sum.
5. Provide a separate line item in the schedule of values for each part of the Work where Applications for Payment may include materials or equipment purchased or fabricated and stored, but not yet installed.

a. Differentiate between items stored on-site and items stored off-site. If required, include evidence of insurance.

6. Provide separate line items in the schedule of values for initial cost of materials, for each subsequent stage of completion, and for total installed value of that part of the Work.
7. Each item in the schedule of values and Applications for Payment shall be complete. Include total cost and proportionate share of general overhead and profit for each item.

a. Temporary facilities and other major cost items that are not direct cost of actual work-in-place may be shown either as separate line items in the schedule of values or distributed as general overhead expense, at Contractor's option.

8. Schedule Updating: Update and resubmit the schedule of values before the next Applications for Payment when Change Orders or Construction Change Directives result in a change in the Contract Sum.

1.5 APPLICATIONS FOR PAYMENT

A. Each Application for Payment following the initial Application for Payment shall be consistent with previous applications and payments as certified by Architect and paid for by Owner.

1. Initial Application for Payment, Application for Payment at time of Substantial Completion, and final Application for Payment involve additional requirements.

A. Application for Payment Forms: Use forms acceptable to Architect and Owner for Applications for Payment. Submit forms for approval with initial submittal of schedule of values.

B. Application Preparation: Complete every entry on form. Notarize and execute by a person authorized to sign legal documents on behalf of Contractor. Architect will return incomplete applications without action.

1. Entries shall match data on the schedule of values and Contractor's construction schedule. Use updated schedules if revisions were made.
2. Include amounts for work completed following previous Application for Payment, whether or not payment has been received. Include only amounts for work completed at time of Application for Payment.
3. Include amounts of Change Orders and Construction Change Directives issued before last day of construction period covered by application.
4. Indicate separate amounts for work being carried out under Owner-requested project acceleration.

C. Stored Materials: Include in Application for Payment amounts applied for materials or equipment purchased or fabricated and stored, but not yet installed. Differentiate between items stored on-site and items stored off-site.

1. Provide certificate of insurance, evidence of transfer of title to Owner, and consent of surety to payment, for stored materials.

2. Provide supporting documentation that verifies amount requested, such as paid invoices. Match amount requested with amounts indicated on documentation; do not include overhead and profit on stored materials.
3. Provide summary documentation for stored materials indicating the following:

    a. Value of materials previously stored and remaining stored as of date of previous Applications for Payment.
    b. Value of previously stored materials put in place after date of previous Application for Payment and on or before date of current Application for Payment.
    c. Value of materials stored since date of previous Application for Payment and remaining stored as of date of current Application for Payment.

D. Transmittal: Submit **three** signed and notarized original copies of each Application for Payment to Architect by a method ensuring receipt **within 24 hours**. One copy shall include waivers of lien and similar attachments if required.

1. Transmit each copy with a transmittal form listing attachments and recording appropriate information about application.

PART 2 - PRODUCTS (Not Used)

PART 3 - EXECUTION (Not Used)

END OF SECTION 012900

SECTION 01 3100 - PROJECT MANAGEMENT AND COORDINATION

PART 1 - GENERAL

1.1 RELATED DOCUMENTS

A. Drawings and general provisions of the Contract, including General and Supplementary Conditions and other Division 01 Specification Sections, apply to this Section.

1.2 SUMMARY

A. Section includes administrative provisions for coordinating construction operations on Project including, but not limited to, the following:

1. Administrative and supervisory personnel.
2. Requests for Information (RFIs).
3. Project meetings.

B. Related Sections:

1. Division 01 Section "Construction Progress Documentation" for preparing and submitting Contractor's construction schedule.
2. Division 01 Section "Execution" for procedures for coordinating general installation and field-engineering services, including establishment of benchmarks and control points.
3. Division 01 Section "Closeout Procedures" for coordinating closeout of the Contract

1.3 DEFINITIONS

A. RFI: Request to Owner, Architect, or Contractor seeking information from each other during construction.

1.4 KEY PERSONNEL

A. Key Personnel Names: Within 15 days of starting construction operations, submit a list of key personnel assignments, including superintendent and other personnel in attendance at Project site. Identify individuals and their duties and responsibilities; list addresses and telephone numbers, including home, office, and cellular telephone numbers and email addresses. Provide names, addresses, and telephone numbers of individuals assigned as standbys in the absence of individuals assigned to Project.

1. Post copies of list in project meeting room, in temporary field office, and by each temporary telephone. Keep list current at all times.

1.5 REQUESTS FOR INFORMATION (RFIs)

A. General: Immediately on discovery of the need for additional information or interpretation of the Contract Documents, Contractor shall prepare and submit an RFI in the form specified.

1. Architect will return RFIs submitted to Architect by other entities controlled by Contractor with no response.
2. Coordinate and submit RFIs in a prompt manner so as to avoid delays in Contractor's work or work of subcontractors.

B. Content of the RFI: Include a detailed, legible description of item needing information or interpretation and the following:

1. Project name.
2. Project number.
3. Date.
4. Name of Contractor.
5. Name of Architect.
6. RFI number, numbered sequentially.
7. RFI subject.
8. Specification Section number and title and related paragraphs, as appropriate.
9. Drawing number and detail references, as appropriate.
10. Field dimensions and conditions, as appropriate.
11. Contractor's suggested resolution. If Contractor's solution(s) impacts the Contract Time or the Contract Sum, Contractor shall state impact in the RFI.
12. Contractor's signature.
13. Attachments: Include sketches, descriptions, measurements, photos, Product Data, Shop Drawings, coordination drawings, and other information necessary to fully describe items needing interpretation.

    a. Include dimensions, thicknesses, structural grid references, and details of affected materials, assemblies, and attachments on attached sketches.

C. RFI Forms: Software-generated form with substantially the same content as indicated above, acceptable to Architect.

D. Architect's Action: Architect will review each RFI, determine action required, and respond. Allow seven working days for Architect's response for each RFI. RFIs received by Architect after 1:00 p.m. will be considered as received the following working day.

1. The following RFIs will be returned without action:

    a. Requests for approval of submittals.
    b. Requests for approval of substitutions.
    c. Requests for coordination information already indicated in the Contract Documents.
    d. Requests for adjustments in the Contract Time or the Contract Sum.
    e. Requests for interpretation of Architect's actions on submittals.
    f. Incomplete RFIs or inaccurately prepared RFIs.

2. Architect's action may include a request for additional information, in which case Architect's time for response will date from time of receipt of additional information.
3. Architect's action on RFIs that may result in a change to the Contract Time or the Contract Sum may be eligible for Contractor to submit Change Proposal according to Division 01 Section "Contract Modification Procedures."

    a. If Contractor believes the RFI response warrants change in the Contract Time or the Contract Sum, notify Architect in writing within 10 days of receipt of the RFI response.

E. On receipt of Architect's action, update the RFI log and immediately distribute the RFI response to affected parties. Review response and notify Architect within seven days if Contractor disagrees with response.

F. RFI Log: Prepare, maintain, and submit a tabular log of RFIs organized by the RFI number. Submit log monthly at progress meetings. Use CSI Log Form 13.2B or software generated log. Include the following:

1. Project name.

2. Name and address of Contractor.
3. Name and address of Architect.
4. RFI number including RFIs that were dropped and not submitted.
5. RFI description.
6. Date the RFI was submitted.
7. Date Architect's response was received.
8. Identification of related Minor Change in the Work, Construction Change Directive, and Proposal Request, as appropriate.
9. Identification of related Field Order, Work Change Directive, and Proposal Request, as appropriate.

1.6 PROJECT MEETINGS

A. General: Schedule and conduct meetings and conferences at Project site, unless otherwise indicated.

1. Attendees: Inform participants and others involved, and individuals whose presence is required, of date and time of each meeting. Notify Owner and Architect of scheduled meeting dates and times.
2. Agenda: Prepare the meeting agenda. Distribute the agenda to all invited attendees.
3. Minutes: Entity responsible for conducting meeting will record significant discussions and agreements achieved. Distribute the meeting minutes to everyone concerned, including Owner and Architect, within three days of the meeting.

B. Preconstruction Conference: Schedule and conduct a preconstruction conference before starting construction, at a time convenient to Owner and Architect, but no later than 15 days after execution of the Agreement.

1. Conduct the conference to review responsibilities and personnel assignments.
2. Attendees: Authorized representatives of Owner, Architect, and their consultants; Contractor and its superintendent; major subcontractors; suppliers; and other concerned parties shall attend the conference. Participants at the conference shall be familiar with Project and authorized to conclude matters relating to the Work.
3. Agenda: Discuss items of significance that could affect progress, including the following:

a. Tentative construction schedule.
b. Phasing.
c. Critical work sequencing and long-lead items.
d. Designation of key personnel and their duties.
e. Lines of communications.
f. Procedures for processing field decisions and Change Orders.
g. Procedures for RFIs.
h. Procedures for testing and inspecting.
i. Procedures for processing Applications for Payment.
j. Distribution of the Contract Documents.
k. Submittal procedures.
l. Preparation of record documents.
m. Use of the premises and existing building.
n. Work restrictions.
o. Working hours.
p. Owner's occupancy requirements.
q. Responsibility for temporary facilities and controls.
r. Procedures for disruptions and shutdowns.
s. Construction waste management and recycling.
t. Parking availability.

u. Office, work, and storage areas.
v. Equipment deliveries and priorities.
w. First aid.
x. Security.
y. Progress cleaning.

4. Minutes: The Architect is responsible for conducting meeting will record and distribute meeting minutes.

C. Preinstallation Conferences: Conduct a preinstallation conference at Project site before each construction activity that requires coordination with other construction or as requested by Architect.

1. Attendees: Installer and representatives of manufacturers and fabricators involved in or affected by the installation and its coordination or integration with other materials and installations that have preceded or will follow, shall attend the meeting. Advise Architect of scheduled meeting dates.
2. Agenda: Review progress of other construction activities and preparations for the particular activity under consideration, including requirements for the following:

a. Options.
b. Related RFIs.
c. Related Change Orders.
d. Review of mockups.
e. Possible conflicts.
f. Compatibility problems.
g. Time schedules.
h. Space and access limitations.
i. Installation procedures.
j. Required performance results.
k. Protection of adjacent work.

3. Record significant conference discussions, agreements, and disagreements, including required corrective measures and actions.
4. Reporting: Distribute minutes of the meeting to each party present and to other parties requiring information.
5. Do not proceed with installation if the conference cannot be successfully concluded. Initiate whatever actions are necessary to resolve impediments to performance of the Work and reconvene the conference at earliest feasible date.

D. Progress Meetings: Conduct progress meetings at bi-weekly intervals.

1. Coordinate dates of meetings with preparation of payment requests.
2. Attendees: In addition to representatives of Owner and Architect, each contractor, subcontractor, supplier, and other entity concerned with current progress or involved in planning, coordination, or performance of future activities shall be represented at these meetings. All participants at the meeting shall be familiar with Project and authorized to conclude matters relating to the Work.
3. Agenda: Review and correct or approve minutes of previous progress meeting. Review other items of significance that could affect progress. Include topics for discussion as appropriate to status of Project.

a. Contractor's Construction Schedule: Review progress since the last meeting. Determine whether each activity is on time, ahead of schedule, or behind schedule, in relation to Contractor's construction schedule. Determine how

construction behind schedule will be expedited; secure commitments from parties involved to do so. Discuss whether schedule revisions are required to ensure that current and subsequent activities will be completed within the Contract Time.

1) Review schedule for next period.

b. Review present and future needs of each entity present, including the following:

1) Interface requirements.
2) Sequence of operations.
3) Status of submittals.
4) Deliveries.
5) Off-site fabrication.
6) Access.
7) Site utilization.
8) Temporary facilities and controls.
9) Progress cleaning.
10) Quality and work standards.
11) Status of correction of deficient items.
12) Field observations.
13) Status of RFIs.
14) Status of proposal requests.
15) Pending changes.
16) Status of Change Orders.
17) Pending claims and disputes.
18) Documentation of information for payment requests.

4. Minutes: The Architect is responsible for conducting the meeting and will record meeting minutes; incorporating detailed submittal, RFI, change order, etc. status reports prepared by the Contractor. The Architect will distribute the meeting minutes to each party present and to parties requiring information.

a. Schedule Updating: Revise Contractor's construction schedule after each progress meeting where revisions to the schedule have been made or recognized. Issue revised schedule concurrently with the report of each meeting.

PART 2 - PRODUCTS (Not Used)

PART 3 - EXECUTION (Not Used)

END OF SECTION 01 3100

SECTION 013200 - CONSTRUCTION PROGRESS DOCUMENTATION

PART 1 - GENERAL

1.1 RELATED DOCUMENTS

A. Drawings and general provisions of the Contract, including General and Supplementary Conditions and other Division 01 Specification Sections, apply to this Section.

1.2 SUMMARY

A. Section includes administrative and procedural requirements for documenting the progress of construction during performance of the Work, including the following:

1. Contractor's construction schedule.
2. Construction schedule updating reports.
3. Daily construction reports.
4. Site condition reports.
5. Special reports.

1.3 DEFINITIONS

A. Activity: A discrete part of a project that can be identified for planning, scheduling, monitoring, and controlling the construction project. Activities included in a construction schedule consume time and resources.

1. Critical Activity: An activity on the critical path that must start and finish on the planned early start and finish times.
2. Predecessor Activity: An activity that precedes another activity in the network.
3. Successor Activity: An activity that follows another activity in the network.

B. Critical Path: The longest connected chain of interdependent activities through the network schedule that establishes the minimum overall Project duration and contains no float.

C. Float: The measure of leeway in starting and completing an activity.

1. Float time [**belongs to Owner**] [**is not for the exclusive use or benefit of either Owner or Contractor, but is a jointly owned, expiring Project resource available to both parties as needed to meet schedule milestones and Contract completion date**].
2. Free float is the amount of time an activity can be delayed without adversely affecting the early start of the successor activity.
3. Total float is the measure of leeway in starting or completing an activity without adversely affecting the planned Project completion date.

D. Resource Loading: The allocation of manpower and equipment necessary for the completion of an activity as scheduled.

1.4 INFORMATIONAL SUBMITTALS

A. Format for Submittals: Submit required submittals in the following format:

1. Working electronic copy of schedule file, where indicated.
2. PDF electronic file.

B. Contractor's Construction Schedule: Initial schedule, of size required to display entire schedule for entire construction period.

1.5 COORDINATION

A. Coordinate Contractor's construction schedule with the schedule of values, **list of subcontracts,** submittal schedule, progress reports, payment requests, and other required schedules and reports.

1. Secure time commitments for performing critical elements of the Work from entities involved.
2. Coordinate each construction activity in the network with other activities and schedule them in proper sequence.

PART 2 - PRODUCTS

2.1 CONTRACTOR'S CONSTRUCTION SCHEDULE, GENERAL

A. Time Frame: Extend schedule from date established for [commencement of the Work] [the Notice of Award] [the Notice to Proceed] to date of [Substantial Completion] [final completion].

1. Contract completion date shall not be changed by submission of a schedule that shows an early completion date, unless specifically authorized by Change Order.

B. Activities: Treat each story or separate area as a separate numbered activity for each main element of the Work. Comply with the following:

1. Activity Duration: Define activities so no activity is longer than 20 days, unless specifically allowed by Architect.
2. Procurement Activities: Include procurement process activities for the following long lead items and major items, requiring a cycle of more than 60 days, as separate activities in schedule. Procurement cycle activities include, but are not limited to, submittals, approvals, purchasing, fabrication, and delivery.

a. <Insert list of major items or pieces of equipment>.

3. Submittal Review Time: Include review and resubmittal times indicated in Section 013300 "Submittal Procedures" in schedule. Coordinate submittal review times in Contractor's construction schedule with submittal schedule.
4. Startup and Testing Time: Include no fewer than 15 days for startup and testing.
5. Substantial Completion: Indicate completion in advance of date established for Substantial Completion, and allow time for Architect's[and Construction Manager's] administrative procedures necessary for certification of Substantial Completion.
6. Punch List and Final Completion: Include not more than 30 days for completion of punch list items and final completion.

C. Constraints: Include constraints and work restrictions indicated in the Contract Documents and as follows in schedule, and show how the sequence of the Work is affected.

1. Phasing: Arrange list of activities on schedule by phase.

D. Milestones: Include milestones indicated in the Contract Documents in schedule, including, but not limited to, the Notice to Proceed, Substantial Completion, and final completion.

E. Recovery Schedule: When periodic update indicates the Work is [14] <Insert number> or more calendar days behind the current approved schedule, submit a separate recovery schedule indicating means by which Contractor intends to regain compliance with the schedule. Indicate changes to working hours, working days, crew sizes, and equipment required to achieve compliance, and date by which recovery will be accomplished.

2.2 CONTRACTOR'S CONSTRUCTION SCHEDULE (GANTT CHART)

A. Gantt-Chart Schedule: Submit a comprehensive, fully developed, horizontal, Gantt-chart-type, Contractor's construction schedule within 30 days of date established for the Notice of Award. Base schedule on the startup construction schedule and additional information received since the start of Project.

B. Preparation: Indicate each significant construction activity separately. Identify first workday of each week with a continuous vertical line.

1. For construction activities that require three months or longer to complete, indicate an estimated completion percentage in 10 percent increments within time bar.

2.3 REPORTS

A. Daily Construction Reports: Prepare a daily construction report recording the following information concerning events at Project site:

1. List of subcontractors at Project site.
2. List of separate contractors at Project site.
3. Approximate count of personnel at Project site.
4. Equipment at Project site.
5. Material deliveries.
6. High and low temperatures and general weather conditions, including presence of rain or snow.
7. Accidents.
8. Meetings and significant decisions.
9. Unusual events (see special reports).
10. Stoppages, delays, shortages, and losses.
11. Meter readings and similar recordings.
12. Emergency procedures.
13. Orders and requests of authorities having jurisdiction.
14. Change Orders received and implemented.
15. [Construction] [Work] Change Directives received and implemented.
16. Services connected and disconnected.
17. Equipment or system tests and startups.
18. Partial completions and occupancies.
19. Substantial Completions authorized.

B. Site Condition Reports: Immediately on discovery of a difference between site conditions and the Contract Documents, prepare and submit a detailed report. Submit with a Request for Information. Include a detailed description of the differing conditions, together with recommendations for changing the Contract Documents.

2.4 SPECIAL REPORTS

A. General: Submit special reports directly to Owner within [one] <Insert number> day(s) of an occurrence. Distribute copies of report to parties affected by the occurrence.

B. Reporting Unusual Events: When an event of an unusual and significant nature occurs at Project site, whether or not related directly to the Work, prepare and submit a special report. List chain of events, persons participating, response by Contractor's personnel, evaluation of results or effects, and similar pertinent information. Advise Owner in advance when these events are known or predictable.

PART 3 - EXECUTION

3.1 CONTRACTOR'S CONSTRUCTION SCHEDULE

A. Contractor's Construction Schedule Updating: At monthly intervals, update schedule to reflect actual construction progress and activities. Issue schedule one week before each regularly scheduled progress meeting.

1. Revise schedule immediately after each meeting or other activity where revisions have been recognized or made. Issue updated schedule concurrently with the report of each such meeting.
2. Include a report with updated schedule that indicates every change, including, but not limited to, changes in logic, durations, actual starts and finishes, and activity durations.
3. As the Work progresses, indicate final completion percentage for each activity.

B. Distribution: Distribute copies of approved schedule to Architect, Owner, separate contractors, testing and inspecting agencies, and other parties identified by Contractor with a need-to-know schedule responsibility.

1. Post copies in Project meeting rooms and temporary field offices.
2. When revisions are made, distribute updated schedules to the same parties and post in the same locations. Delete parties from distribution when they have completed their assigned portion of the Work and are no longer involved in performance of construction activities.

END OF SECTION 013200

SECTION 01 3300 - SUBMITTAL PROCEDURES

PART 1 - GENERAL

1.1 RELATED DOCUMENTS

A. Drawings and general provisions of the Contract, including General and Supplementary Conditions and other Division 01 Specification Sections, apply to this Section.

1.2 SUMMARY

A. Section includes requirements for the submittal schedule and administrative and procedural requirements for submitting Shop Drawings, Product Data, Samples, and other submittals.

B. Related Sections:

1. Division 01 Section "Project Record Documents" for submitting record Drawings, record Specifications, and record Product Data.

1.3 DEFINITIONS

A. Action Submittals: Written and graphic information and physical samples that require Architect's responsive action. Action submittals are those submittals indicated in individual Specification Sections as action submittals.

B. Informational Submittals: Written and graphic information and physical samples that do not require Architect's responsive action. Submittals may be rejected for not complying with requirements. Informational submittals are those submittals indicated in individual Specification Sections as informational submittals.

C. File Transfer Protocol (FTP): Communications protocol that enables transfer of files to and from another computer over a network and that serves as the basis for standard Internet protocols. An FTP site is a portion of a network located outside of network firewalls within which internal and external users are able to access files.

D. Portable Document Format (PDF): An open standard file format licensed by Adobe Systems used for representing documents in a device-independent and display resolution-independent fixed-layout document format.

1.4 ACTION SUBMITTALS

A. Submittal Schedule: Submit a schedule of submittals, arranged in chronological order by dates required by construction schedule. Include time requested for review, ordering, manufacturing, fabrication, and delivery when establishing dates. Include additional time requested for making corrections or modifications to submittals noted by the Architect and requested additional time for handling and reviewing submittals required by those corrections.

1.5 SUBMITTAL ADMINISTRATIVE REQUIREMENTS

A. Architect's/Engineer's Digital Data Files: Electronic copies of CAD Drawings of the Contract Drawings will be made available by Architect for Contractor's use in preparing submittals, when requested by the Contractor.

1. Architect will furnish Contractor one set of digital data drawing files of the Contract Drawings for use in preparing Shop Drawings and Project record drawings.

a. Neither Architect, Engineer nor the Owner makes any representations as to the accuracy or completeness of digital data drawing files as they relate to the Contract Drawings.
b. Digital Drawing Software Program: The Contract Drawings are available in AutoCAD 2008.
c. The Contractor will receive the digital documents in their "as-is" or "native" condition in which the Design Professional uses and organizes the data, which may, in most conditions, not directly correspond to the printed sheet format.
d. The Contractor shall execute a digital data licensing agreement establishing the conditions for data file use and releasing the Owner and Architect/Engineers of any liability or subrogation claims due to the accuracy or completeness of the electronic date files provided. The form of agreement shall be in the form of AIA Document C106, Digital Data Licensing Agreement, as included at the end of this section. Upon execution of a contract and when requested by the Contract, a final licensing agreement will be drafted for execution.
e. The Contractor shall pay a fee of $100 per printed document page for digital data file(s) to the Architect to cover the Architect/Engineer's costs for packaging and delivering. The contractor will be required to pay the fee for all printed drawing sheets in the contract documents where needed or requested, or not due to the multi-sheet multi-discipline integration of digital data files.
f. Allow 14 days upon receipt of written request of documents for packaging and delivery.
g. The Architect will release digital data drawing files to the General Contractor, only. Distribution and costs of distribution to subcontractors and suppliers from the General Contractor will be determined by the General Contractor.
h. The following Digital Data files will by furnished for each appropriate discipline, when requested:

1) Complete Contract Document Set
2) Complete sets of individual discipline(s)
3) Portions of sets of each discipline

i. The following pdf files will by furnished for each appropriate discipline, when requested:

1) Complete Contract Document Set
2) Complete sets of each discipline
3) Portions of sets of each discipline

B. Coordination: Coordinate preparation and processing of submittals with performance of construction activities.

1. Coordinate each submittal with fabrication, purchasing, testing, delivery, other submittals, and related activities that require sequential activity.
2. Submit all submittal items required for each Specification Section concurrently unless partial submittals for portions of the Work are indicated on approved submittal schedule.

3. Submit action submittals and informational submittals required by the same Specification Section as separate packages under separate transmittals.
4. Coordinate transmittal of different types of submittals for related parts of the Work so processing will not be delayed because of need to review submittals concurrently for coordination.

    a. Architect/Engineer reserves the right to withhold action on a submittal requiring coordination with other submittals until related submittals are received.
    b. Architect/Engineer reserves the right to withhold action on a submittal submitted out of sequence with the submittal schedule or the construction schedule critical path.
    c. Architect/Engineer reserves the right to withhold action on a submittal requiring color selection coordination with other submittals other color sensitive submittals until related submittals are received.

C. Processing Time: Allow time for submittal review, including time for resubmittals, as follows. Time for review shall commence on Architect's receipt of submittal. No extension of the Contract Time will be authorized because of failure to transmit submittals enough in advance of the Work to permit processing, including resubmittals.

1. Initial Review: Reference Article 6 of Document D for initial review of each submittal. Allow additional time if coordination with subsequent submittals is required. Architect will advise Contractor when a submittal being processed must be delayed for coordination.
2. Intermediate Review: If intermediate submittal is necessary, process it in same manner as initial submittal.
3. Resubmittal Review: Allow 15 days for review of each resubmittal.
4. Sequential Review: Where sequential review of submittals by Architect's consultants, Owner, or other parties is indicated, the review period will be extended.

    a. All submittals will require sequential review by the Architect and Owner.

D. Identification and Information: Place a permanent label or title block on each paper copy submittal item for identification.

1. Indicate name of firm or entity that prepared each submittal on label or title block.
2. Include the following information for processing and recording action taken:

    a. Project name.
    b. Date.
    c. Name of Architect.
    d. Name of Contractor.
    e. Name of subcontractor.
    f. Name of supplier.
    g. Name of manufacturer.
    h. Submittal number or other unique identifier, including revision identifier.

        1) Submittal number shall use Specification Section number followed by a decimal point and then a sequential number (e.g., 061000.01). Resubmittals shall include an alphabetic suffix after another decimal point (e.g., 061000.01.A).

    i. Number and title of appropriate Specification Section.
    j. Drawing number and detail references, as appropriate.
    k. Location(s) where product is to be installed, as appropriate.
    l. Other necessary identification.

E. Identification and Information: Identify and incorporate information in each electronic submittal file as follows:

1. Assemble complete submittal package into a single indexed file with links enabling navigation to each item.
2. Name file with submittal number or other unique identifier, including revision identifier.

    a. File name shall use project identifier and Specification Section number followed by a decimal point and then a sequential number (e.g., SOR-061000.01). Resubmittals shall include an alphabetic suffix after another decimal point (e.g., SOR-061000.01.A).

3. Provide means for insertion to permanently record Contractor's review and approval markings and action taken by Architect.
4. Include the following information on an inserted cover sheet:

    a. Project name.
    b. Date.
    c. Name and address of Architect.
    d. Name of Contractor.
    e. Name of firm or entity that prepared submittal.
    f. Name of subcontractor.
    g. Name of supplier.
    h. Name of manufacturer.
    i. Number and title of appropriate Specification Section.
    j. Drawing number and detail references, as appropriate.
    k. Location(s) where product is to be installed, as appropriate.
    l. Related physical samples submitted directly.
    m. Other necessary identification.

5. Include the following information as keywords in the electronic file metadata:

    a. Project name.
    b. Number and title of appropriate Specification Section.
    c. Manufacturer name.
    d. Product name.

F. Options: Identify options requiring selection by the Architect.

G. Deviations: Identify deviations from the Contract Documents on submittals.

H. Additional Paper Copies: Unless additional copies are required for final submittal, and unless Architect observes noncompliance with provisions in the Contract Documents, initial submittal may serve as final submittal.

1. Submit one copy of submittal to concurrent reviewer in addition to specified number of copies to Architect.
2. Submit additional copies as requested by architect for use in review and coordination of submittals.
3. Additional copies for the contractor, subcontractors, venders, suppliers and others, upon acceptance of submittals shall be the responsible of each. All copies shall be made from approved submittals showing project approval stamp and corresponding annotations.

I. Transmittal: Assemble each submittal individually and appropriately for transmittal and handling. Transmit each submittal using a transmittal form. Architect will return submittals, without review, received from sources other than Contractor.

1. Transmittal Form: Provide locations on form for the following information:

a. Project name and number.
b. Date.
c. Destination (To:).
d. Source (From:).
e. Names of subcontractor, manufacturer, and supplier.
f. Category and type of submittal.
g. Submittal purpose and description.
h. Specification Section number and title.
i. Indication of full or partial submittal.
j. Drawing number and detail references, as appropriate.
k. Transmittal number, numbered consecutively.
l. Submittal and transmittal distribution record.
m. Remarks.
n. Signature of transmitter.

2. On an attached separate sheet, prepared on Contractor's letterhead, record relevant information, requests for data, revisions other than those requested by Architect on previous submittals, and deviations from requirements in the Contract Documents, including minor variations and limitations. Include same identification information as related submittal.

J. Resubmittals: Make resubmittals in same form and number of copies as initial submittal.

1. Note date and content of previous submittal.
2. Note date and content of revision in label or title block and clearly indicate extent of revision.
3. Resubmit submittals until they are marked with approval notation from Architect's action stamp.

K. Distribution: Furnish copies of final submittals to manufacturers, subcontractors, suppliers, fabricators, installers, authorities having jurisdiction, and others as necessary for performance of construction activities. Show distribution on transmittal forms.

L. Use for Construction: Use only final submittals that are marked with approval notation from Architect's /Engineer's action stamp.

PART 2 - PRODUCTS

2.1 SUBMITTAL PROCEDURES

A. General Submittal Procedure Requirements: Prepare and submit submittals required by individual Specification Sections. Types of submittals are indicated in individual Specification Sections.

1. Transmit electronic submittals as PDF electronic files directly to Architect on transportable re-usable digital file media, such as DVD or CD Disk, memory stick, etc., along with a minimum of (1) paper copy as noted herein.

a. Architect will return annotated paper copy or electronic file in PDF format. Architect will annotate and retain one copy of PDF file as an electronic Project record document file.

2. Action Submittals: Submit one (1) paper copies of each submittal, unless otherwise indicated. Architect may not return paper copy.
3. Informational Submittals: Submit one (1) paper copy of each submittal, unless otherwise indicated. Architect may not return paper copy.
4. Closeout Submittals and Maintenance Material Submittals: Comply with requirements specified in Division 01 Section "Closeout Procedures."
5. Certificates and Certifications Submittals: Provide a statement that includes signature of entity responsible for preparing certification. Certificates and certifications shall be signed by an officer or other individual authorized to sign documents on behalf of that entity.

   a. Provide a notarized statement on original paper copy certificates and certifications where indicated.

6. Test and Inspection Reports Submittals: Comply with requirements specified in Division 01 Section "Quality Requirements."

B. Product Data: Collect information into a single submittal for each element of construction and type of product or equipment.

1. If information must be specially prepared for submittal because standard published data are not suitable for use, submit as Shop Drawings, not as Product Data.
2. Mark each copy of each submittal to show which products and options are applicable.
3. Include the following information, as applicable:

   a. Manufacturer's catalog cuts.
   b. Manufacturer's product specifications.
   c. Standard color charts.
   d. Statement of compliance with specified referenced standards.
   e. Testing by recognized testing agency.
   f. Application of testing agency labels and seals.
   g. Notation of coordination requirements.
   h. Availability and delivery time information.

4. For equipment, include the following in addition to the above, as applicable:

   a. Wiring diagrams showing factory-installed wiring.
   b. Printed performance curves.
   c. Operational range diagrams.
   d. Clearances required to other construction, if not indicated on accompanying Shop Drawings.

5. Submit Product Data before or concurrent with Samples.
6. Submit Product Data in the following format:

   a. PDF electronic file.

C. Shop Drawings: Prepare Project-specific information, drawn accurately to scale. Do not base Shop Drawings on reproductions of the Contract Documents or standard printed data.

1. Preparation: Fully illustrate requirements in the Contract Documents. Include the following information, as applicable:

    a. Identification of products.
    b. Schedules.
    c. Compliance with specified standards.
    d. Notation of coordination requirements.
    e. Notation of dimensions established by field measurement.
    f. Relationship and attachment to adjoining construction clearly indicated.
    g. Seal and signature of professional engineer if specified.

2. Sheet Size: Except for templates, patterns, and similar full-size drawings, submit Shop Drawings on sheets at least (8-1/2 by 11 inches) but no larger than (30 by 42 inches).
3. Submit Shop Drawings in the following format:

    a. PDF electronic file.

D. Samples: Submit Samples for review of kind, color, pattern, and texture for a check of these characteristics with other elements and for a comparison of these characteristics between submittal and actual component as delivered and installed.

1. Transmit Samples that contain multiple, related components such as accessories together in one submittal package.
2. Identification: Attach label on unexposed side of Samples that includes the following:

    a. Generic description of Sample.
    b. Product name and name of manufacturer.
    c. Sample source.
    d. Number and title of applicable Specification Section.

3. Disposition: Maintain sets of approved Samples at Project site, available for quality-control comparisons throughout the course of construction activity. Sample sets may be used to determine final acceptance of construction associated with each set.

    a. Samples not incorporated into the Work, or otherwise designated as Owner's property, are the property of Contractor.

4. Samples for Initial Selection: Submit manufacturer's color charts consisting of units or sections of units showing the full range of colors, textures, and patterns available.

    a. Number of Samples: Submit one (1) full set of available choices where color, pattern, texture, or similar characteristics are required to be selected from manufacturer's product line. Architect will return submittal with options selected.

5. Samples for Verification: Submit full-size units or Samples of size indicated, prepared from same material to be used for the Work, cured and finished in manner specified, and physically identical with material or product proposed for use, and that show full range of color and texture variations expected. Samples include, but are not limited to, the following: partial sections of manufactured or fabricated components; small cuts or containers of materials; complete units of repetitively used materials; swatches showing color, texture, and pattern; color range sets; and components used for independent testing and inspection.

    a. Number of Samples: Submit two sets of Samples. Architect will retain one (1) Sample sets; remainder will be returned.

1) Submit a single Sample where assembly details, workmanship, fabrication techniques, connections, operation, and other similar characteristics are to be demonstrated.
2) If variation in color, pattern, texture, or other characteristic is inherent in material or product represented by a Sample, submit at least three (3) sets of paired units that show approximate limits of variations.

E. Product Schedule: As required in individual Specification Sections, prepare a written summary indicating types of products required for the Work and their intended location. Include the following information in tabular form:

1. Type of product. Include unique identifier for each product.
2. Manufacturer and product name, and model number if applicable.
3. Number and name of room or space.
4. Location within room or space.
5. Submit product schedule in the following format:

a. PDF electronic file.

F. Coordination Drawings: Comply with requirements specified in Division 01 Section "Project Management and Coordination."

G. Qualification Data: Prepare written information that demonstrates capabilities and experience of firm or person. Include lists of completed projects with project names and addresses, contact information of architects and owners, and other information specified.

H. Welding Certificates: Prepare written certification that welding procedures and personnel comply with requirements in the Contract Documents. Submit record of Welding Procedure Specification and Procedure Qualification Record on American Welding Society (AWS) forms. Include names of firms and personnel certified.

I. Installer Certificates: Submit written statements on manufacturer's letterhead certifying that Installer complies with requirements in the Contract Documents and, where required, is authorized by manufacturer for this specific Project.

J. Manufacturer Certificates: Submit written statements on manufacturer's letterhead certifying that manufacturer complies with requirements in the Contract Documents. Include evidence of manufacturing experience where required.

K. Product Certificates: Submit written statements on manufacturer's letterhead certifying that product complies with requirements in the Contract Documents.

L. Material Certificates: Submit written statements on manufacturer's letterhead certifying that material complies with requirements in the Contract Documents.

M. Material Test Reports: Submit reports written by a qualified testing agency, on testing agency's standard form, indicating and interpreting test results of material for compliance with requirements in the Contract Documents.

N. Product Test Reports: Submit written reports indicating current product produced by manufacturer complies with requirements in the Contract Documents. Base reports on evaluation of tests performed by manufacturer and witnessed by a qualified testing agency, or on comprehensive tests performed by a qualified testing agency.

O. Research Reports: Submit written evidence, from a model code organization acceptable to authorities having jurisdiction, that product complies with building code in effect for Project. Include the following information:

1. Name of evaluation organization.
2. Date of evaluation.
3. Time period when report is in effect.
4. Product and manufacturers' names.
5. Description of product.
6. Test procedures and results.
7. Limitations of use.

P. Schedule of Tests and Inspections: Comply with requirements specified in Division 01 Section "Quality Requirements."

Q. Preconstruction Test Reports: Submit reports written by a qualified testing agency, on testing agency's standard form, indicating and interpreting results of tests performed before installation of product, for compliance with performance requirements in the Contract Documents.

R. Compatibility Test Reports: Submit reports written by a qualified testing agency, on testing agency's standard form, indicating and interpreting results of compatibility tests performed before installation of product. Include written recommendations for primers and substrate preparation needed for adhesion.

S. Field Test Reports: Submit reports indicating and interpreting results of field tests performed either during installation of product or after product is installed in its final location, for compliance with requirements in the Contract Documents.

T. Maintenance Data: Comply with requirements specified in Division 01 Section "Operation and Maintenance Data."

U. Design Data: Prepare and submit written and graphic information, including, but not limited to, performance and design criteria, list of applicable codes and regulations, and calculations. Include list of assumptions and other performance and design criteria and a summary of loads. Include load diagrams if applicable. Provide name and version of software, if any, used for calculations. Include page numbers.

2.2 DELEGATED-DESIGN SERVICES

A. Performance and Design Criteria: Where professional design services or certifications by a design professional are specifically required of Contractor by the Contract Documents, provide products and systems complying with specific performance and design criteria indicated.

1. If criteria indicated are not sufficient to perform services or certification required, submit a written request for additional information to Architect.

B. Delegated-Design Services Certification: In addition to Shop Drawings, Product Data, and other required submittals, submit digitally-signed PDF electronic file of certificate, signed and sealed by the responsible design professional, for each product and system specifically assigned to Contractor to be designed or certified by a design professional.

1. Indicate that products and systems comply with performance and design criteria in the Contract Documents. Include list of codes, loads, and other factors used in performing these services.

PART 3 - EXECUTION

3.1 CONTRACTOR'S REVIEW

A. Action and Informational Submittals: Review each submittal and check for coordination with other Work of the Contract and for compliance with the Contract Documents. Note corrections and field dimensions. Mark with approval stamp before submitting to Architect.

B. Project Closeout and Maintenance/Material Submittals: Refer to requirements in Division 01 Section "Closeout Procedures."

C. Approval Stamp: Stamp each submittal with a uniform, approval stamp. Include Project name, number, and location, submittal number, Specification Section title and number, name of reviewer, date of Contractor's approval, and statement certifying that submittal has been reviewed, checked, and approved for compliance with the Contract Documents.

3.2 ARCHITECT'S ACTION

A. General: Architect will not review submittals that do not bear Contractor's approval stamp and will return them without action.

B. Action Submittals: Architect will review each submittal, make marks to indicate corrections or modifications required, and return it. Architect will stamp each submittal with an action stamp and will mark stamp appropriately to indicate action.

C. Informational Submittals: Architect will review each submittal and will not return it, or will return it if it does not comply with requirements. Architect will forward each submittal to appropriate party.

D. Partial submittals prepared for a portion of the Work will be reviewed when use of partial submittals has received prior approval from Architect.

E. Incomplete submittals are not acceptable, will be considered nonresponsive, and will be returned without review.

F. Submittals not required by the Contract Documents may not be reviewed and may be discarded.

END OF SECTION 01 3300

SECTION 013516 - ALTERATION PROJECT PROCEDURES

PART 1 - GENERAL

1.1 RELATED DOCUMENTS

A. Drawings and general provisions of the Contract, including General and Supplementary Conditions and Division 01 Specification Sections, apply to this Section.

1.2 SUMMARY

A. Section includes special procedures for alteration work.

1.3 DEFINITIONS

A. Alteration Work: This term includes remodeling, work performed within existing spaces or on existing surfaces as part of the Project.

B. Consolidate: To strengthen loose or deteriorated materials in place.

C. Design Reference Sample: A sample that represents the Architect's prebid selection of work to be matched; it may be existing work or work specially produced for the Project.

D. Dismantle: To remove by disassembling or detaching an item from a surface, using gentle methods and equipment to prevent damage to the item and surfaces; disposing of items unless indicated to be salvaged or reinstalled.

E. Match: To blend with adjacent construction and manifest no apparent difference in material type, species, cut, form, detail, color, grain, texture, or finish; as approved by Architect.

F. Refinish: To remove existing finishes to base material and apply new finish to match original, or as otherwise indicated.

G. Repair: To correct damage and defects, retaining existing materials, features, and finishes. This includes patching, piecing-in, splicing, consolidating, or otherwise reinforcing or upgrading materials.

H. Replace: To remove, duplicate, and reinstall entire item with new material. The original item is the pattern for creating duplicates unless otherwise indicated.

I. Replicate: To reproduce in exact detail, materials, and finish unless otherwise indicated.

J. Reproduce: To fabricate a new item, accurate in detail to the original, and from either the same or a similar material as the original, unless otherwise indicated.

K. Retain: To keep existing items that are not to be removed or dismantled.

L. Strip: To remove existing finish down to base material unless otherwise indicated.

1.4 COORDINATION

A. Alteration Work Subschedule: A construction schedule coordinating the sequencing and scheduling of alteration work for entire Project, including each activity to be performed, and based on Contractor's Construction Schedule. Secure time commitments for performing critical construction activities from separate entities responsible for alteration work.

1. Schedule construction operations in sequence required to obtain best Work results.
2. Coordinate sequence of alteration work activities to accommodate the following:

    a. Owner's continuing occupancy of portions of existing building.
    b. Other known work in progress.

c. Tests and inspections.

3. Detail sequence of alteration work, with start and end dates.
4. Utility Services: Indicate how long utility services will be interrupted. Coordinate shutoff, capping, and continuation of utility services.
5. Use of elevator and stairs.
6. Equipment Data: List gross loaded weight, axle-load distribution, and wheel-base dimension data for mobile and heavy equipment proposed for use in existing structure. Do not use such equipment without certification from Contractor's professional engineer that the structure can support the imposed loadings without damage.

B. Pedestrian and Vehicular Circulation: Coordinate alteration work with circulation patterns within Project building(s) and site. Some work is near circulation patterns **and adjacent to restricted areas**. Circulation patterns cannot be closed off entirely and in places can be only temporarily redirected around small areas of work.[**Access to restricted areas may not be obstructed.**] Plan and execute the Work accordingly.

1.5 PROJECT MEETINGS FOR ALTERATION WORK

A. Preliminary Conference for Alteration Work: Before starting alteration work, **conduct** conference at **Project site**.

1. Attendees: In addition to representatives of Owner, Architect, and Contractor, testing service representative, specialists, and chemical-cleaner manufacturer(s) shall be represented at the meeting.
2. Agenda: Discuss items of significance that could affect progress of alteration work, including review of the following:

a. Alteration Work Subschedule: Discuss and finalize; verify availability of materials, equipment, and facilities needed to make progress and avoid delays.
b. Fire-prevention plan.
c. Governing regulations.
d. Areas where existing construction is to remain and the required protection.
e. Hauling routes.
f. Sequence of alteration work operations.
g. Storage, protection, and accounting for salvaged and specially fabricated items.
h. Existing conditions, staging, and structural loading limitations of areas where materials are stored.
i. Qualifications of personnel assigned to alteration work and assigned duties.
j. Requirements for extent and quality of work, tolerances, and required clearances.
k. Embedded work such as flashings and lintels, special details, collection of waste, protection of occupants and the public, and condition of other construction that affects the Work or will affect the work.

3. Reporting: **Architect will record** conference results and distribute copies to everyone in attendance and to others affected by decisions or actions resulting from conference.

B. Coordination Meetings: Conduct coordination meetings specifically for alteration work at **monthly** intervals. Coordination meetings are in addition to specific meetings held for other purposes, such as progress meetings and preinstallation conferences.

1. Attendees: In addition to representatives of Owner, Architect, and Contractor, each specialist, supplier, installer, and other entity concerned with progress or involved in planning, coordination, or performance of alteration work activities shall be represented at these meetings. All participants at conference shall be familiar with Project and authorized to conclude matters relating to alteration work.
2. Agenda: Review and correct or approve minutes of previous coordination meeting. Review other items of significance that could affect progress of alteration work. Include topics for discussion as appropriate to status of Project.

a. Alteration Work Subschedule: Review progress since last coordination meeting. Determine whether each schedule item is on time, ahead of schedule, or behind schedule. Determine how construction behind schedule will be expedited with retention of quality; secure commitments from parties involved to do so. Discuss whether schedule revisions are required to ensure that current and subsequent activities are completed within the Contract Time.
b. Schedule Updating: Revise Contractor's Alteration Work Subschedule after each coordination meeting where revisions to schedule have been made or recognized. Issue revised schedule concurrently with report of each meeting.
c. Review present and future needs of each entity present, including review items listed in the "Preliminary Conference for Alteration Work" Paragraph in this article and the following:

1) Interface requirements of alteration work with other Project Work.
2) Status of submittals for alteration work.
3) Access to alteration work locations.
4) Effectiveness of fire-prevention plan.
5) Quality and work standards of alteration work.
6) Change Orders for alteration work.

3. Reporting: Record meeting results and distribute copies to everyone in attendance and to others affected by decisions or actions resulting from each meeting.
4. "Alteration Work Program" Paragraph below pertains to entire Project. Alteration programs for specific items of work are specified in Sections for those work items.

1.6 STORAGE AND HANDLING OF SALVAGED MATERIALS

A. Salvaged Materials for Reinstallation:

1. Repair and clean items for reuse as indicated.
2. Pack or crate items after cleaning and repairing; cushion against damage during handling. Label contents of containers.
3. Protect items from damage during transport and storage.
4. Reinstall items in locations indicated. Comply with installation requirements for new materials and equipment unless otherwise indicated. Provide connections, supports, and miscellaneous materials to make items functional for use indicated.

B. Existing Materials to Remain: Protect construction indicated to remain against damage and soiling from construction work. Where permitted by Architect, items may be dismantled and taken to a suitable, protected storage location during construction work and reinstalled in their original locations after alteration and other construction work in the vicinity is complete.

C. Storage: Catalog and store items within a weathertight enclosure where they are protected from moisture, weather, condensation, and freezing temperatures.

1. Identify each item for reinstallation with a nonpermanent mark to document its original location. Indicate original locations on plans, elevations, sections, or photographs by annotating the identifying marks.
2. Secure stored materials to protect from theft.
3. Control humidity so that it does not exceed 85 percent. Maintain temperatures 5 deg F (3 deg C) or more above the dew point.

D. Storage Space:

1. Owner will arrange for limited on-site location(s) for free storage of salvaged material. This storage space includes security **and climate control** for stored material.
2. Arrange for off-site locations for storage and protection of salvaged material that cannot be stored and protected on-site.

1.7 FIELD CONDITIONS

A. Survey of Existing Conditions: Record existing conditions that affect the Work by use of pre-construction photographs and preconstruction videotapes.

B. Discrepancies: Notify Architect of discrepancies between existing conditions and Drawings before proceeding with removal and dismantling work.

C. Owner's Removals: Before beginning alteration work, verify in correspondence with Owner that the following items have been removed:

1. Office Furniture and Equipment.

D. Size Limitations in Existing Spaces: Materials, products, and equipment used for performing the Work and for transporting debris, materials, and products shall be of sizes that clear surfaces within existing spaces, areas, rooms, and openings, including temporary protection, by 6 inches or more.

PART 2 - PRODUCTS - (Not Used)

PART 3 - EXECUTION

3.1 PROTECTION

A. Protect persons, motor vehicles, surrounding surfaces of building, building site, plants, and surrounding buildings from harm resulting from alteration work.

1. Use only proven protection methods, appropriate to each area and surface being protected.
2. Provide temporary barricades, barriers, and directional signage to exclude the public from areas where alteration work is being performed.
3. Erect temporary barriers to form and maintain fire-egress routes.
4. Erect temporary protective covers over walkways and at points of pedestrian and vehicular entrance and exit that must remain in service during alteration work.
5. Contain dust and debris generated by alteration work, and prevent it from reaching the public or adjacent surfaces.
6. Provide shoring, bracing, and supports as necessary. Do not overload structural elements.
7. Protect floors and other surfaces along hauling routes from damage, wear, and staining.
8. Provide supplemental sound-control treatment to isolate demolition work from other areas of the building.

B. Temporary Protection of Materials to Remain:

1. Protect existing materials with temporary protections and construction. Do not remove existing materials unless otherwise indicated.
2. Do not attach temporary protection to existing surfaces except as indicated as part of the alteration work program.

C. Comply with each product manufacturer's written instructions for protections and precautions. Protect against adverse effects of products and procedures on people and adjacent materials, components, and vegetation.

D. Utility and Communications Services:

1. Notify Owner, Architect, authorities having jurisdiction, and entities owning or controlling wires, conduits, pipes, and other services affected by alteration work before commencing operations.
2. Disconnect and cap pipes and services as required by authorities having jurisdiction, as required for alteration work.

3. Maintain existing services unless otherwise indicated; keep in service, and protect against damage during operations. Provide temporary services during interruptions to existing utilities.

E. Existing Drains: Prior to the start of work in an area, test drainage system to ensure that it is functioning properly. Notify Architect immediately of inadequate drainage or blockage. Do not begin work in an area until the drainage system is functioning properly.

1. Prevent solids such as adhesive or mortar residue or other debris from entering the drainage system. Clean out drains and drain lines that become sluggish or blocked by sand or other materials resulting from alteration work.
2. Protect drains from pollutants. Block drains or filter out sediments, allowing only clean water to pass.

3.2 PROTECTION FROM FIRE

A. General: Follow fire-prevention plan and the following:

1. Comply with NFPA 241 requirements unless otherwise indicated.[**Perform duties titled "Owner's Responsibility for Fire Protection."**]
2. Remove and keep area free of combustibles, including rubbish, paper, waste, and chemicals, unless necessary for the immediate work.

a. If combustible material cannot be removed, provide fire blankets to cover such materials.

B. Heat-Generating Equipment and Combustible Materials: Comply with the following procedures while performing work with heat-generating equipment or combustible materials, including welding, torch-cutting, soldering, brazing, removing paint with heat, or other operations where open flames or implements using high heat or combustible solvents and chemicals are anticipated:

1. Obtain Owner's approval for operations involving use of **open-flame or** welding or other high-heat equipment. Notify Owner at least 72 hours before each occurrence, indicating location of such work.
2. As far as practicable, restrict heat-generating equipment to shop areas or outside the building.
3. Do not perform work with heat-generating equipment in or near rooms or in areas where flammable liquids or explosive vapors are present or thought to be present. Use a combustible gas indicator test to ensure that the area is safe.
4. Use fireproof baffles to prevent flames, sparks, hot gases, or other high-temperature material from reaching surrounding combustible material.
5. Prevent the spread of sparks and particles of hot metal through open windows, doors, holes, and cracks in floors, walls, ceilings, roofs, and other openings.
6. Fire Watch: Before working with heat-generating equipment or combustible materials, station personnel to serve as a fire watch at each location where such work is performed. Fire-watch personnel shall have the authority to enforce fire safety. Station fire watch according to NFPA 51B, NFPA 241, and as follows:

a. Train each fire watch in the proper operation of fire-control equipment and alarms.
b. Prohibit fire-watch personnel from other work that would be a distraction from fire-watch duties.
c. Cease work with heat-generating equipment whenever fire-watch personnel are not present.
d. Have fire-watch personnel perform final fire-safety inspection each day beginning no sooner than 30 minutes after conclusion of work to detect hidden or smoldering fires and to ensure that proper fire prevention is maintained.
e. Maintain fire-watch personnel at Project site until 60 minutes after conclusion of daily work.

C. Fire-Control Devices: Provide and maintain fire extinguishers, fire blankets, and rag buckets for disposal of rags with combustible liquids. Maintain each as suitable for the type of fire risk in each work area. Ensure that nearby personnel and the fire-watch personnel are trained in fire-extinguisher and blanket use.

D. Sprinklers: Where sprinkler protection exists and is functional, maintain it without interruption while operations are being performed. If operations are performed close to sprinklers, shield them temporarily with guards.

1. Remove temporary guards at the end of work shifts, whenever operations are paused, and when nearby work is complete.

3.3 PROTECTION DURING APPLICATION OF CHEMICALS

A. Protect motor vehicles, surrounding surfaces of building, building site, plants, and surrounding buildings from harm or spillage resulting from applications of chemicals and adhesives.

B. Cover adjacent surfaces with protective materials that are proven to resist chemicals selected for Project unless chemicals being used will not damage adjacent surfaces as indicated in alteration work program. Use covering materials and masking agents that are waterproof and UV resistant and that will not stain or leave residue on surfaces to which they are applied. Apply protective materials according to manufacturer's written instructions. Do not apply liquid masking agents or adhesives to painted or porous surfaces. When no longer needed, promptly remove protective materials.

C. Do not apply chemicals during winds of sufficient force to spread them to unprotected surfaces.

D. Neutralize alkaline and acid wastes and legally dispose of off Owner's property.

E. Collect and dispose of runoff from chemical operations by legal means and in a manner that prevents soil contamination, soil erosion, undermining of paving and foundations, damage to landscaping, or water penetration into building interior.

3.4 GENERAL ALTERATION WORK

A. Have specialty work performed only by qualified specialists.

B. Ensure that supervisory personnel are present when work begins and during its progress.

C. Record existing work before each procedure (preconstruction), and record progress during the work. Use digital preconstruction documentation photographs or video recordings. Perform surveys of Project site as the Work progresses to detect hazards resulting from alterations.

D. Notify Architect of visible changes in the integrity of material or components whether from environmental causes including biological attack, UV degradation, freezing, or thawing or from structural defects including cracks, movement, or distortion.

1. Do not proceed with the work in question until directed by Architect.

END OF SECTION 013516

SECTION 01 4000 - QUALITY REQUIREMENTS

PART 1 - GENERAL

1.1 RELATED DOCUMENTS

A. Drawings and general provisions of the Contract, including General and Supplementary Conditions and other Division 01 Specification Sections, apply to this Section.

1.2 SUMMARY

A. Section includes administrative and procedural requirements for quality assurance and quality control.

B. Testing and inspecting services are required to verify compliance with requirements specified or indicated. These services do not relieve Contractor of responsibility for compliance with the Contract Document requirements.

1. Specific quality-assurance and quality-control requirements for individual construction activities are specified in the Sections that specify those activities. Requirements in those Sections may also cover production of standard products.
2. Specified tests, inspections, and related actions do not limit Contractor's other quality-assurance and quality-control procedures that facilitate compliance with the Contract Document requirements.
3. Requirements for Contractor to provide quality-assurance and quality-control services required by Architect, Owner, or authorities having jurisdiction are not limited by provisions of this Section.

1.3 DEFINITIONS

A. Quality-Assurance Services: Activities, actions, and procedures performed before and during execution of the Work to guard against defects and deficiencies and substantiate that proposed construction will comply with requirements.

B. Quality-Control Services: Tests, inspections, procedures, and related actions during and after execution of the Work to evaluate that actual products incorporated into the Work and completed construction comply with requirements. Services do not include contract enforcement activities performed by Architect.

C. Mockups: Full size physical assemblies that are constructed on-site. Mockups are constructed to verify selections made under sample submittals; to demonstrate aesthetic effects and, where indicated, qualities of materials and execution; to review coordination, testing, or operation; to show interface between dissimilar materials; and to demonstrate compliance with specified installation tolerances. Mockups are not Samples. Unless otherwise indicated, approved mockups establish the standard by which the Work will be judged.

D. Product Testing: Tests and inspections that are performed by an NRTL, an NVLAP, or a testing agency qualified to conduct product testing and acceptable to authorities having jurisdiction, to establish product performance and compliance with specified requirements.

E. Source Quality-Control Testing: Tests and inspections that are performed at the source, i.e., plant, mill, factory, or shop.

F. Field Quality-Control Testing: Tests and inspections that are performed on-site for installation of the Work and for completed Work.

G. Testing Agency: An entity engaged to perform specific tests, inspections, or both. Testing laboratory shall mean the same as testing agency.

H. Installer/Applicator/Erector: Contractor or another entity engaged by Contractor as an employee, Subcontractor, or Sub-subcontractor, to perform a particular construction operation, including installation, erection, application, and similar operations.

1. Use of trade-specific terminology in referring to a trade or entity does not require that certain construction activities be performed by accredited or unionized individuals, or that requirements specified apply exclusively to specific trade or trades.

I. Experienced: When used with an entity or individual, "experienced" means having successfully completed a minimum of five previous projects similar in nature, size, and extent to this Project; being familiar with special requirements indicated; and having complied with requirements of authorities having jurisdiction.

1.4 CONFLICTING REQUIREMENTS

A. Referenced Standards: If compliance with two or more standards is specified and the standards establish different or conflicting requirements for minimum quantities or quality levels, comply with the most stringent requirement. Refer conflicting requirements that are different, but apparently equal, to Architect for a decision before proceeding.

B. Minimum Quantity or Quality Levels: The quantity or quality level shown or specified shall be the minimum provided or performed. The actual installation may comply exactly with the minimum quantity or quality specified, or it may exceed the minimum within reasonable limits. To comply with these requirements, indicated numeric values are minimum or maximum, as appropriate, for the context of requirements. Refer uncertainties to Architect for a decision before proceeding.

1.5 INFORMATIONAL SUBMITTALS

A. Contractor's Quality-Control Plan: For quality-assurance and quality-control activities and responsibilities.

B. Testing Agency Qualifications: For testing agencies specified in "Quality Assurance" Article to demonstrate their capabilities and experience. Include proof of qualifications in the form of a recent report on the inspection of the testing agency by a recognized authority.

C. Schedule of Tests and Inspections: Prepare in tabular form and include the following:

1. Specification Section number and title.
2. Entity responsible for performing tests and inspections.
3. Description of test and inspection.
4. Identification of applicable standards.
5. Identification of test and inspection methods.
6. Number of tests and inspections required.
7. Time schedule or time span for tests and inspections.
8. Requirements for obtaining samples.
9. Unique characteristics of each quality-control service.

1.6 CONTRACTOR'S QUALITY-CONTROL PLAN

A. Quality-Control Plan, General: Submit quality-control plan within 10 days of Notice to Proceed, and not less than five days prior to preconstruction conference. Submit in format acceptable to Architect. Identify personnel, procedures, controls, instructions, tests, records, and forms to be used to carry out Contractor's quality-assurance and quality-control responsibilities. Coordinate with Contractor's construction schedule.

B. Quality-Control Personnel Qualifications: Engage qualified full-time personnel trained and experienced in managing and executing quality-assurance and quality-control procedures similar in nature and extent to those required for Project.

C. Submittal Procedure: Describe procedures for ensuring compliance with requirements through review and management of submittal process. Indicate qualifications of personnel responsible for submittal review.

D. Testing and Inspection: Include in quality-control plan a comprehensive schedule of Work requiring testing or inspection, including the following:

1. Contractor-performed tests and inspections including subcontractor-performed tests and inspections. Include required tests and inspections and Contractor-elected tests and inspections.
2. Special inspections required by authorities having jurisdiction and indicated on the "Statement of Special Inspections."
3. Owner-performed tests and inspections indicated in the Contract Documents.

E. Continuous Inspection of Workmanship: Describe process for continuous inspection during construction to identify and correct deficiencies in workmanship in addition to testing and inspection specified. Indicate types of corrective actions to be required to bring work into compliance with standards of workmanship established by Contract requirements and approved mockups.

F. Monitoring and Documentation: Maintain testing and inspection reports including log of approved and rejected results. Include work Architect has indicated as nonconforming or defective. Indicate corrective actions taken to bring nonconforming work into compliance with requirements. Comply with requirements of authorities having jurisdiction.

1.7 REPORTS AND DOCUMENTS

A. Test and Inspection Reports: Prepare and submit certified written reports specified in other Sections. Include the following:

1. Date of issue.
2. Project title and number.
3. Name, address, and telephone number of testing agency.
4. Dates and locations of samples and tests or inspections.
5. Names of individuals making tests and inspections.
6. Description of the Work and test and inspection method.
7. Identification of product and Specification Section.
8. Complete test or inspection data.
9. Test and inspection results and an interpretation of test results.
10. Record of temperature and weather conditions at time of sample taking and testing and inspecting.
11. Comments or professional opinion on whether tested or inspected Work complies with the Contract Document requirements.

12. Name and signature of laboratory inspector.
13. Recommendations on retesting and reinspecting.

B. Factory-Authorized Service Representative's Reports: Prepare written information documenting manufacturer's factory-authorized service representative's tests and inspections specified in other Sections. Include the following:

1. Name, address, and telephone number of factory-authorized service representative making report.

2. Statement on condition of substrates and their acceptability for installation of product.
3. Statement that products / equipment complies with requirements.
4. Summary of installation procedures being followed, whether they comply with requirements and, if not, what corrective action was taken.
5. Results of operational and other tests and a statement of whether observed performance complies with requirements.
6. Statement whether conditions, products, and installation will affect warranty.
7. Other required items indicated in individual Specification Sections.

C. Permits, Licenses, and Certificates: For Owner's records, submit copies of permits, licenses, certifications, inspection reports, releases, jurisdictional settlements, notices, receipts for fee payments, judgments, correspondence, records, and similar documents, established for compliance with standards and regulations bearing on performance of the Work.

1.8 QUALITY ASSURANCE

A. General: Qualifications paragraphs in this article establish the minimum qualification levels required; individual Specification Sections specify additional requirements.

B. Manufacturer Qualifications: A firm experienced in manufacturing products or systems similar to those indicated for this Project and with a record of successful in-service performance, as well as sufficient production capacity to produce required units.

C. Fabricator Qualifications: A firm experienced in producing products similar to those indicated for this Project and with a record of successful in-service performance, as well as sufficient production capacity to produce required units.

D. Installer Qualifications: A firm or individual experienced in installing, erecting, or assembling work similar in material, design, and extent to that indicated for this Project, whose work has resulted in construction with a record of successful in-service performance.

E. Professional Engineer Qualifications: A professional engineer who is legally qualified to practice in jurisdiction where Project is located and who is experienced in providing engineering services of the kind indicated. Engineering services are defined as those performed for installations of the system, assembly, or product that are similar to those indicated for this Project in material, design, and extent.

F. Testing Agency Qualifications: An NRTL, an NVLAP, or an independent agency with the experience and capability to conduct testing and inspecting indicated, as documented according to ASTM E 329; and with additional qualifications specified in individual Sections; and where required by authorities having jurisdiction, that is acceptable to authorities.

1. NRTL: A nationally recognized testing laboratory according to 29 CFR 1910.7.
2. NVLAP: A testing agency accredited according to NIST's National Voluntary Laboratory Accreditation Program.

G. Manufacturer's Technical Representative Qualifications: An authorized representative of manufacturer who is trained and approved by manufacturer to observe and inspect installation of manufacturer's products that are similar in material, design, and extent to those indicated for this Project.

H. Factory-Authorized Service Representative Qualifications: An authorized representative of manufacturer who is trained and approved by manufacturer to inspect installation of manufacturer's products that are similar in material, design, and extent to those indicated for this Project.

I. Mockups: Before installing portions of the Work requiring mockups, build mockups for each form of construction and finish required to comply with the following requirements, using materials indicated for the completed Work:

1. Build mockups in location and of size indicated or, if not indicated, as directed by Architect.
2. Notify Architect seven days in advance of dates and times when mockups will be constructed.
3. Employ supervisory personnel who will oversee mockup construction. Employ workers that will be employed during the construction at the Project.
4. Demonstrate the proposed range of aesthetic effects and workmanship.
5. Obtain Architect's approval of mockups before starting work, fabrication, or construction.

    a. Allow seven days for initial review and each re-review of each mockup.

6. Maintain mockups during construction in an undisturbed condition as a standard for judging the completed Work.
7. Demolish and remove mockups when directed, unless otherwise indicated.

1.9 QUALITY CONTROL

A. Contractor Responsibilities: Tests and inspections are Contractor's responsibility. Perform additional quality-control activities required to verify that the Work complies with requirements, whether specified or not.

1. Unless otherwise indicated, provide quality-control services specified and those required by authorities having jurisdiction. Perform quality-control services required of Contractor by authorities having jurisdiction, whether specified or not.
2. Where services are indicated as Contractor's responsibility, engage a qualified testing agency to perform these quality-control services.
3. Notify testing agencies at least 24 hours in advance of time when Work that requires testing or inspecting will be performed.
4. Where quality-control services are indicated as Contractor's responsibility, submit a certified written report, in duplicate, of each quality-control service.
5. Testing and inspecting requested by Contractor and not required by the Contract Documents are Contractor's responsibility.
6. Submit additional copies of each written report directly to authorities having jurisdiction, when they so direct.

B. Manufacturer's Field Services: Where indicated, engage a factory-authorized service representative to inspect field-assembled components and equipment installation, including service connections. Report results in writing as specified in Division 01 Section "Submittal Procedures."

C. Manufacturer's Technical Services: Where indicated, engage a manufacturer's technical representative to observe and inspect the Work. Manufacturer's technical representative's services include participation in preinstallation conferences, examination of substrates and conditions, verification of materials, observation of Installer activities, inspection of completed portions of the Work, and submittal of written reports.

D. Retesting/Reinspecting: Regardless of whether original tests or inspections were Contractor's responsibility, provide quality-control services, including retesting and reinspecting, for construction that replaced Work that failed to comply with the Contract Documents.

E. Testing Agency Responsibilities: Cooperate with Architect and Contractor in performance of duties. Provide qualified personnel to perform required tests and inspections.

1. Notify Architect and Contractor promptly of irregularities or deficiencies observed in the Work during performance of its services.
2. Determine the location from which test samples will be taken and in which in-situ tests are conducted.
3. Conduct and interpret tests and inspections and state in each report whether tested and inspected work complies with or deviates from requirements.
4. Submit a certified written report, in duplicate, of each test, inspection, and similar quality-control service through Contractor.
5. Do not release, revoke, alter, or increase the Contract Document requirements or approve or accept any portion of the Work.
6. Do not perform any duties of Contractor.

F. Associated Services: Cooperate with agencies performing required tests, inspections, and similar quality-control services, and provide reasonable auxiliary services as requested. Notify agency sufficiently in advance of operations to permit assignment of personnel. Provide the following:

1. Access to the Work.
2. Incidental labor and facilities necessary to facilitate tests and inspections.
3. Adequate quantities of representative samples of materials that require testing and inspecting. Assist agency in obtaining samples.
4. Facilities for storage and field curing of test samples.
5. Delivery of samples to testing agencies.
6. Preliminary design mix proposed for use for material mixes that require control by testing agency.
7. Security and protection for samples and for testing and inspecting equipment at Project site.

G. Coordination: Coordinate sequence of activities to accommodate required quality-assurance and -control services with a minimum of delay and to avoid necessity of removing and replacing construction to accommodate testing and inspecting.

1. Schedule times for tests, inspections, obtaining samples, and similar activities.

H. Schedule of Tests and Inspections: Prepare a schedule of tests, inspections, and similar quality-control services required by the Contract Documents as a component of the Contractor's quality-control plan. Coordinate and submit concurrently with Contractor's construction schedule. Update as the Work progresses. .

1. Distribution: Distribute schedule to Owner, Architect, testing agencies, and each party involved in performance of portions of the Work where tests and inspections are required.

1.10 SPECIAL TESTS AND INSPECTIONS

A. Special Tests and Inspections: Engage a qualified testing agency to conduct special tests and inspections required by authorities having jurisdiction as follows:

1. Notifying Architect and Contractor promptly of irregularities and deficiencies observed in the Work during performance of its services.
2. Submitting a certified written report of each test, inspection, and similar quality-control service to Architect with copy to Contractor and to authorities having jurisdiction.
3. Submitting a final report of special tests and inspections at Substantial Completion, which includes a list of unresolved deficiencies.
4. Interpreting tests and inspections and stating in each report whether tested and inspected work complies with or deviates from the Contract Documents.
5. Retesting and reinspecting corrected work.

PART 2 - PRODUCTS (Not Used)

PART 3 - EXECUTION

3.1 TEST AND INSPECTION LOG

A. Prepare a record of tests and inspections. Include the following:

1. Date test or inspection was conducted.
2. Description of the Work tested or inspected.
3. Date test or inspection results were transmitted to Architect.
4. Identification of testing agency or special inspector conducting test or inspection.

B. Maintain log at Project site. Post changes and modifications as they occur. Provide access to test and inspection log for Architect's reference during normal working hours.

3.2 REPAIR AND PROTECTION

A. General: On completion of testing, inspecting, sample taking, and similar services, repair damaged construction and restore substrates and finishes.

1. Provide materials and comply with installation requirements specified in other Specification Sections or matching existing substrates and finishes. Restore patched areas and extend restoration into adjoining areas with durable seams that are as invisible as possible. Comply with the Contract Document requirements for cutting and patching in Division 01 Section "Execution."

B. Protect construction exposed by or for quality-control service activities.

C. Repair and protection are Contractor's responsibility, regardless of the assignment of responsibility for quality-control services.

END OF SECTION 01 4000

SECTION 01 4200 - REFERENCES

PART 1 - GENERAL

1.1 RELATED DOCUMENTS

A. Drawings and general provisions of the Contract, including General and Supplementary Conditions and other Division 01 Specification Sections, apply to this Section.

1.2 DEFINITIONS

A. General Explanation: A substantial amount of specification language constitutes definitions for terms found in other contract documents, including the drawings which must be recognized as diagrammatic in nature and not completely descriptive of requirements indicated thereon. Certain terms used in the contract documents are defined generally in this article. Definitions and explanations of this section are not necessarily either complete or exclusive, but are general for the work to extent not stated more explicitly in another provision of the contract documents.

1. These specifications are of an abbreviated form and contain incomplete sentences. Omissions of words or phrases such as "the Contractor shall," "as noted on the Drawings," "according to the Drawings," "a," "an," "the" and "all" are intentional. Omitted words and phrases shall be supplied by inference in the same manner as when a "note" occurs on the Drawings.

B. General Requirements: The provisions or requirements of Division 1 sections. General Requirements apply to entire work of Contract and, where so indicated, to other elements of work which are included in the project.

1. In case of conflict between the General Conditions and the General Requirements, the General Requirements shall govern this Contract.

C. Indicated: The term "indicated" is a cross-reference to details, notes or schedules on the drawings, and to similar means of recording requirements in the contract documents. Where terms such as "shown", "noted", "scheduled", and "specified" are used in lieu of "indicated", it is for purpose of helping reader locate cross-reference, and no limitation of location is intended except as specifically noted.

D. Directed, Requested, etc.: Where not otherwise explained, terms such as "directed", "requested", "authorized", "selected", "approved", "required", "accepted", and "permitted" mean "directed by Architect", "requested by Architect", etc. However, no such implied meaning will be interpreted to extend Architect's responsibility into Contractor's area of construction supervision.

E. Approve: Where used in conjunction with Architect's response to submittals, requests, applications, inquiries, reports and claims by Contractor, the meaning of term "approved" will be held to limitations of Architect's responsibilities and duties as specified in General and Supplementary Conditions. In no case will "approval" by Architect be interpreted as a release of Contractor from responsibilities to fulfill requirements of the contract documents.

F. Furnish: Except as otherwise defined in greater detail, term "furnish" is used to mean supply and deliver to project site, ready for unloading, unpacking, assembly, installation, etc., as applicable in each instance.

G. Install: Except as otherwise defined in greater detail, term "install" is used to describe operations at project site including unloading, unpacking, assembly, erection, placing, connecting, anchoring, applying, working to dimension, finishing, curing, protecting, cleaning and similar operations, as applicable in each instance.

H. Provide: Except as otherwise defined in greater detail, term "provide" means furnish and install, complete and ready for intended use, as applicable in each instance.

I. Installer: The entity (person or firm) engaged by the Contractor or its subcontractor or sub-subcontractor for the performance of a particular unit of work at the project site, including installation, erection, application and similar required operations. It is a general requirement that such entities (Installers) be expert in operations they are engaged to perform.

J. Unless otherwise indicated, a detail indicates the general application of work at all locations where it logically applies.

K. Overlapping and Conflicting Requirements: Where compliance with 2 or more industry standards or sets of requirements is specified, and overlapping of those different standards or requirements establishes different or conflicting minimums or levels of quality, the most stringent requirement is intended. Refer apparently-equal-but-different requirements, and uncertainties as to which level of quality is more stringent, to Architect/Engineer for a decision before proceeding.

L. Minimum Quality/Quantity: In every instance, quality level or quantity shown or specified is intended as minimum for the work to be performed or provided. Except as otherwise specifically indicated, actual work may either comply exactly with that minimum (within specified tolerances), or may exceed that minimum within reasonable limits. In complying with requirements, indicated numeric values are either minimums or maximums as noted or as appropriate for context of requirements. Refer instances of uncertainty to Architect/Engineer for decision before proceeding.

1.3 INDUSTRY STANDARDS

A. General Applicability of Standards: Applicable standards of construction industry have same force and effect (and are made a part of contract documents by reference) as if copied directly into contract documents, or as if published copies were bound herewith.

B. Reference standards (referenced directly in contract documents or by governing regulations) have precedence over non-referenced standards which are recognized in industry for applicability to work.

C. Publication Dates: Except as otherwise indicated, where compliance with an industry standard is required, comply with standard in effect as of date of contract documents.

D. Reference to technical society, organization or body is made in specifications in accordance with abbreviations listed in the Reference Standards Article of the General Conditions of the Contract.

1.4 GOVERNING REGULATIONS

A. Codes, Rules and Regulations: The project has been designed and shall be constructed to comply with applicable sections of the following codes, rules and regulations. Except as otherwise

indicated, comply with editions and supplements in effect as of date of contract documents. Other required compliances are noted elsewhere in the Contract Documents.

1. Building Codes:

   a. International Building Code (ICBO), 2006 ed.
   b. International Building Fire Code (IFC), 2006 ed.
   c. International Mechanical Code (ICBO), 2006 ed.
   d. International Plumbing Code (ICBO), 2006 ed.
   e. International Fuel Gas Code (IFGC), 2006 ed.
   f. International Energy Conservation Code (IECC), 2006 ed.

2. National Fire Prevention Association (NFPA), National Fire Codes and Standards:

   a. NFPA-10, 2007 ed., Portable Fire Extinguishers
   b. NFPA-13, 13D and 13R, 2007 ed., Installation of Sprinkler System
   c. NFPA-14, 2007 ed. Installation of Standpipe and Hose Systems
   d. NFPA-25, 2008 ed., Testing Fire Sprinkler Systems
   e. NFPA-70, 2008 ed., National Electric Code (NEC)
   f. NFPA-72, 2007 ed., National Fire Alarm Code
   g. NFPA-101 Life Safety Code
   h. NFPA-110, 2005 ed., Emergency and Standby Power System

3. Underwriters Laboratories Inc.:

   a. All materials, equipment and component parts of equipment shall bear UL labels whenever such devices are listed by UL.

4. Handicapped Accessibility Standards:

   a. Am2010 ADA Standards for Accessibility Design (2010 ADA Standards)
   b. ANSI 117.1 – Handicapped Accessibility

5. Misc. Codes and Standards
   a. Kansas Fire Prevention Code
   b. Kansas State Boiler Code

B. Storm Water Discharge: Comply with Environmental Protection Agency (EPA) regulations and provisions of the Federal Water Pollution Control Act for control of storm water discharges associated with any construction activity.

C. Submittals: For the Owner's records, submit copies of permits, licenses, certifications, inspection reports, releases, jurisdictional settlements, notices, receipts for fee payments, judgments, and similar documents, correspondence and records established in conjunction with compliance with standards and regulations bearing upon performance of the work.

PART 2 - PRODUCTS (Not Applicable)

PART 3 - EXECUTION (Not Applicable)

END OF SECTION 01 4200

SECTION 01 4529 – STRUCTURAL TESTING LABORATORY SERVICES

PART 1 - GENERAL

1.1 RELATED DOCUMENTS

A. Drawings and general provisions of Contract, including General and Supplementary Conditions and other Division-01 Specification Sections apply to work specified in this Section.

1.2 SCOPE OF WORK

A. Testing Laboratory: An independent testing laboratory will sample and test materials as they are being installed for compliance with acceptance criteria as specified and report and interpret the results. The laboratory shall monitor and report on the installation of constructed work and shall perform tests on the completed construction to indicate Contractor's compliance with the various material specifications governing this work. The Contractor shall be responsible for paying the testing laboratory for these services.

1.3 SPECIAL INSPECTIONS

A. The Testing Laboratory or a separate agency shall serve as a Special Inspector to provide Special Inspection services for the items listed below. The scope of such services for each item shall be as defined in the International Building Code - 2012 or as defined in the local building code of the jurisdiction wherein the project is located. These inspections are mandatory for conformance to the legal requirements of the building code and shall be in addition to the inspections and tests otherwise defined in this specification.

1. Reinforcing Steel Placement
2. Concrete Work
3. Welding of Reinforcing Steel
4. Bolts to be Installed in Concrete and Their Installation to allow for higher allowable tension values
5. Inspection of Structural Steel, Bolting, and Welding Material
6. Welding of Structural Steel
7. High-Strength Bolting
8. Prepared Earth Fill
9. Masonry Work

B. Qualifications of Special Inspector: The special inspector shall be a qualified person who shall demonstrate competence, to the satisfaction of the Authority Having Jurisdiction, for inspection of the particular type of construction or operation being inspected. The Special Inspector shall meet the legal qualifications of the building code having jurisdiction.

C. Duties and Responsibilities of the Special Inspector:

1. The special inspector shall observe the work assigned to ascertain, to the best of his/her knowledge, that it is in conformance with the approved design drawings and specifications.

2. The special inspector shall furnish inspection reports to the Contractor, the Architect/Engineer, and the Owner. All discrepancies shall be brought to the immediate attention of the Architect/Engineer, Contractor, and Owner. A report that the corrected work has been inspected shall be sent to the Contractor , the Architect/Engineer, and the Owner.

3. The special inspector shall submit a final signed report stating whether the work requiring special inspection was, to the best of the inspector's knowledge, in conformance to the approved plans and specifications and the applicable workmanship provisions of the building code.

1.4 QUALIFICATIONS OF TESTING LABORATORY

A. The Testing Laboratory shall meet the basic requirements of ASTM E329 and shall submit to the Owner, Architect, and Engineer evidence of current accreditation from the American Association for Laboratory Accreditation, the AASHTO Accreditation Program or the "NIST" National Voluntary Laboratory Accreditation Program.

B. Tests and inspections shall be conducted in accordance with specified requirements, and if not specified, in accordance with the applicable standards of the American Society for Testing and Materials or other recognized and accepted authorities in the field.

C. Qualifications of Welding Inspectors

1. Inspectors performing visual weld inspection shall meet the requirements of AWS D1.1 Section 6.1.4. Welding inspection shall be supervised and the inspection reports signed by an inspector with current certification as an AWS Certified Welding Inspector (CWI)

2. Inspectors performing nondestructive examinations of welds other than visual inspection (MT, PT, UT, and RT) shall meet the requirements of AWS D1.1, Section 6.14.6.

1.5 AUTHORITIES AND DUTIES OF THE LABORATORY

A. Attending Preconstruction Conferences: The Testing Laboratory shall receive from the Contractor and review the project plans and specifications with the Architect and Engineer as soon as possible prior to the start of construction. The Laboratory shall attend preconstruction conferences with the Architect, Engineer, Project Manager, General Contractor, and Material Suppliers as required to coordinate materials inspection and testing requirements with the planned construction schedule and shall participate in such conferences throughout the course of the project.

B. Cooperation with Design Team: The Laboratory shall cooperate with the Architect, Engineer, and Contractor and provide qualified personnel promptly on notice.

C. The Laboratory shall perform the required inspections, sampling, and testing of materials as specified under each section and observe methods of construction for compliance with the requirements of the Contract Documents and the applicable building code.

D. Inspections Required by Government Agencies: The Testing Laboratory shall perform inspections and submit reports and certifications as required by government agencies having jurisdiction over the aspects of the project covered by this specification.

E. Notification of Deficiencies in the Work: The Laboratory shall notify the Architect, Engineer, and Contractor within 24 hours of discovery by telephone or e-mail, and then in writing of observed

irregularities and deficiencies of the work and other conditions not in compliance with the requirements of the Contract Documents.

F. Reports:

1. Information on Reports: The Laboratory shall submit copies of reports of inspections and tests promptly and directly to the parties named below. The reports shall contain at least the following information:

   a. Project Name
   b. Date report issued
   c. Testing Laboratory name and address
   d. Name and signature of inspector
   e. Date of inspection and sampling
   f. Date of test
   g. Identification of product and Specification section
   h. Location in the project
   i. Identification of inspection or test
   j. Record of weather conditions and temperature (if applicable)
   k. Results of test regarding compliance with Contract Documents

2. Copies: The Laboratory shall send signed copies of test and inspection reports to the following parties:

   a. 2 copies to the Owner or his representative
   b. 2 copies to the General Contractor
   c. 1 copy to the Architect
   d. 1 copy to the Engineer of responsibility

3. Certification: Upon completion of the job, the Laboratory shall furnish to the Owner, Architect, and Engineer of Record, a statement signed by a licensed professional engineer that, to the best of their knowledge, required tests and inspections were made in accordance with the requirements of the Contract Documents.

G. Monitoring Product and Material Certifications: The Testing Laboratory shall be responsible for monitoring the submittals of product and material certifications from manufacturers and suppliers as specified in the Specifications and shall report to the Owner, Architect, and Engineer when those submittals are not made in a timely manner.

H. Limitations of Authority: The Testing Laboratory is not authorized to revoke, alter, relax, enlarge upon, or release any requirements of the Specifications or to approve or accept any portion of the work or to perform any duties of the General Contractor and his Subcontractors.

1.6 CONTRACTOR'S RESPONSIBILITY

A. Cooperation with Design Team: The Contractor shall cooperate with laboratory personnel, provide access to the work, and to manufacturer's operations.

B. Furnishing Samples and Certificates: The Contractor shall provide to the laboratory certificates and representative samples of materials proposed for use in the work in quantities sufficient for accurate testing as specified.

C. Furnishing Casual Labor, Equipment and Facilities: The Contractor shall furnish casual labor, equipment, and facilities as required for sampling and testing by the laboratory and otherwise facilitate the required inspections and tests.

D. Advance Notice: The Contractor shall be responsible for notifying the Testing Laboratory sufficiently in advance of operations to allow for assignment of personnel and scheduling of tests.

E. Payment for Substitution Testing: The Contractor shall arrange for and pay for any additional samples and tests above those required by the Contract Documents as requested by the Contractor for his convenience in performing the work.

F. Payment for Retesting: The Contractor shall be liable for the cost for any additional inspections, sampling, testing, and retesting done by the Testing Laboratory as required when initial tests indicate work does not comply with the requirements of the Contract Documents.

G. Payment by Contractor: The Contractor shall furnish and pay for the following items:

1. Soil survey of the location of borrow soil materials, samples of existing soil materials, and delivery to the Contractor's Testing Laboratory.

2. Samples of concrete aggregates and delivery to the Contractor's Testing Laboratory.

3. Concrete mix designs as prepared by his concrete supplier.

4. Site-situated storage boxes for concrete cylinders

5. Concrete coring, tests of below strength concrete, and load tests, if ordered by the Owner, Architect, or Engineer.

6. Certification of reinforcing steel mill order.

7. Certification of structural steel mill order.

8. Certification of portland cement, lime, fly ash.

9. Certification of welders and preparation of Welding Procedure Specifications.

10. Tests, samples, and mock-ups of substitute material where the substitution is requested by the Contractor and the tests are necessary in the opinion of the Owner, Architect or Engineer to establish equality with specified items.

11. The making and testing of concrete cylinders for the purpose of evaluating strength at time of form stripping or the time spent evaluating the in situ strength of concrete using the Maturity Method.

12. Any other tests when such costs are required by the Contract Documents to be paid by the Contractor.

H. Notification of Source Change: The Contractor shall be responsible for notifying the Owner, Architect, Engineer, and Testing Laboratory when the source of any material is changed after the original tests or inspections have been made.

I. Tests for Suspected Deficient Work: If in the opinion of the Owner, Architect, or Engineer any of the work of the Contractor is not satisfactory, the Contractor shall furnish and pay for all tests that the Owner, Architect, or Engineer deem advisable to determine its proper construction.

1.7 PAYMENT OF TESTING LABORATORY

A. The Contractor will pay for the initial Laboratory services for testing of materials for compliance with the requirements of the Contract Documents. The Contractor will be liable for the cost for testing and retesting of materials that do not comply with the requirements of the Contract Documents and shall furnish and pay for the testing and inspection of other items as specified in these Specifications.

PART 2 - PRODUCTS (Not Used)

PART 3 - EXECUTION

3.1 SCOPE OF WORK

A. The work to be performed by the Testing Laboratory shall be as specified in this Section of the Specification.

3.2 EARTHWORK

A. Compacted Fill Inspection and Testing:

1. Inspection of Subgrade Below Compacted Fill: The Testing Laboratory shall observe and verify that the subgrade below compacted fill has been properly prepared before compact fill construction begins.

2. Verification of Fill Material: Perform classification and testing to verify that the fill material to be used complies with the project specifications.

3. During placement and compaction of fill, determine that the material being used and the maximum lift thickness comply with the specifications.

4. Field Density Testing: Perform field density testing as described below

a. Paved Areas and Building Slab Subgrade:
   1) Make at least one field density test of the natural subgrade for every 2500 square feet of paved area or building slab but in no case less than three tests.
   2) In each compacted fill layer or lift, make one field density test for every 2500 square feet of building slab or paved area but in no case less than three tests.

b. Foundation Wall Backfill: Make at least one field density test for each 200 lineal feet of wall with a minimum of 4 tests for the basement walls around the perimeter of each building and a minimum of one test for every other type of foundation wall on the site. Tests shall be performed in random lifts along each wall.

c. Compacted Fill Beneath Column and Wall Footings and Mat Foundations: Make at least one field density test in each compacted fill layer or lift for each column footing, one for each twenty-five lineal feet of wall and one for each 2500 sq. ft of mat foundation area or fraction thereof.

5. Field Density Tests: Field Density Tests shall be run according to ASTM D2937, or ASTM D2922 as applicable.

6. Acceptance Criteria: The results of field density tests by the Laboratory will be considered satisfactory if the average of any three consecutive tests has a value not less than the required

density with no single test falling more than 2 percent below the required density and the moisture content conforms to the requirements of the specification.

7. Report Copies: Moisture-density curves and results of field density tests shall be submitted to the parties specified earlier in this section.

8. Additional Testing: If reports by the Laboratory indicate field densities lower than specified, additional tests will be run by the Laboratory with at least the frequencies scheduled above on recompacted fill and/or natural subgrade. The Testing Laboratory shall notify the Contractor on a timely basis for any required retesting so as not to delay the work. The costs of such tests shall be paid by the Contractor.

B. Foundation Inspection by the Testing Laboratory:

1. Material Testing: The Testing Laboratory shall provide testing and inspection of materials used in foundation elements as described below.

2. Spread (Excavated) Footings

a. Concrete Cylinders: Make and test concrete cylinders as specified for Poured-in-Place Concrete.
b. Reinforcing Steel: Inspect reinforcing steel size, number of bars, and placement and confirm dowel or anchor bolt placement into footing.

C. Foundation Inspection by the Geotechnical Engineer: The Geotechnical Engineer of Record shall provide inspection service for the following items before and during foundation installation as appropriate for the foundation type. The Geotechnical Engineer shall submit written field inspection reports promptly after inspection to the parties listed above and report his findings after each inspection by telephone or e-mail to the Engineer.

1. Spread (Excavated) Footing:

a. Subgrade: Verify that foundation bearing conditions are consistent with soil report tests and that the footing is being installed in the proper soil strata at the proper elevation. Make recommendations regarding adjustment to subgrade or bearing elevation if subgrade is not adequate to support footing.

3.3 REINFORCING STEEL

A. Reinforcing Steel Field Inspection: The Testing Laboratory or designated Special Inspector shall inspect 100 % of reinforcement before each concrete pour to verify the information noted below. Inspection reports shall be prepared and distributed in accordance with the local building code and as specified in this specification.

1. Primary and secondary, longitudinal reinforcement has correct size and number in proper layers.

2. Longitudinal reinforcement has correct length and lap.

3. Ties and stirrups are of correct size, spacing, and number and have the proper termination-hook geometry.

4. Unscheduled face reinforcement in beams are provided and are of correct size, number and spacing and have the proper end terminations.

5. Proper hooks are provided at bar ends as detailed.

6. Reinforcement is properly supported and braced to formwork to prevent movement during concreting operation.

7. Reinforcement has proper cover.

8. Sufficient spacing between reinforcement for concrete placement.

9. Dowel reinforcement is of proper size, at proper spacing, and has proper lap length and embedment length.

10. Welded wire reinforcement is composed of flat sheets, has proper wire gage and spacing, is properly supported, and is properly lapped with a length of one square plus two inches.

11. Proper Construction/Control/Expansion joint spacing and reinforcement.

12. Reinforcement around embedded items is erected according to details.

13. Welded reinforcement has been done according to AWS requirements. Review the Welding Procedure Specification (WPS) submitted by the contractor for any reinforcing steel other than ASTM A 706 that is proposed to be welded for consistency with acceptable welding practices and the AWS.

B. Welded Reinforcing: Continuous inspection of the welding of reinforcing bars to assure compliance with the requirements of AWS shall be done for the following items:

1. Shear reinforcement

3.4 CONCRETE MATERIALS AND POURED IN PLACE CONCRETE

A. Concrete Mix Designs: The Testing Laboratory shall review the submitted mix designs for conformance to the specifications and for suitability for use in the project. The Testing Laboratory shall attend the Mix Design Conference and the Pre-Concrete Conference as noted in the Cast-in-Place Concrete Specification.

B. Job Site Inspection: The scope of the work to be performed by the inspector on the jobsite shall be as follows:

1. Prior to Concrete Placing

a. Spread Footings
   1) Verify footing dimension.
   2) Verify top of footing elevation.
   3) Verify that forms are plumb and straight, braced against movement, and lubricated for removal.
   4) Inspect reinforcement per REINFORCING STEEL article.

b. Grade Beams
   1) Verify width, depth and elevation of grade beams.
   2) Verify that forms are plumb and straight, braced against movement, and lubricated for removal.
   3) Verify that carton forms below grade beam are dry.
   4) Verify that carton forms are neatly formed around piers.

5) Inspect reinforcement per REINFORCING STEEL article.

c. Slab-on-Grade
   1) Verify that moisture retarder is provided, is lapped properly, and is not torn or punctured.
   2) Verify formwork at turndowns and slab edges is plumb and straight, braced against movement and lubricated for removal.
   3) Inspect reinforcement per REINFORCING STEEL article.
   4) Verify there is no standing water or debris in pour area.

d. Elevated Deck (General)
   1) Verify that formwork conforms to signed and sealed shop drawings.
   2) Verify that shoring layout conforms to signed and sealed shop drawings.
   3) Verify that reshores at all levels conforms to signed and sealed shop drawings.
   4) Verify that forms are plumb and straight, braced against movement, and lubricated for removal.
   5) Verify that the forms used for exposed finish surfaces are of the type specified and provide a joint system as shown on the Architect's drawings.
   6) Verify the proper dimensions of girders, beams and joists.
   7) Verify that the slab thickness and top-of-slab elevation is correct.
   8) Verify that openings and sleeves are correct size and location.
   9) Verify that horizontal and vertical sleeves through girders, beams, or joists have been approved by the Engineer and that approved reinforcement is provided.
   10) Verify the top of columns are 1/2 inch below the deck soffit.
   11) Inspect reinforcement per REINFORCING STEEL article.
   12) Verify that debris is removed.

2. On-Site Concrete Material Testing and Inspection

   a. Verify that the Contractor is following appropriate concreting practices consistent with any extreme environmental conditions at the point of placement in the structure as defined below.
   b. Inspect concrete upon arrival to verify that the proper concrete mix number, type of concrete, concrete strength, and that it is meeting job specifications, is being placed at the proper location. Report concrete not meeting the specified requirements and immediately notify the Contractor, Batch Plant Inspector, Architect, Engineer, and Owner.
   c. Inspect plastic concrete upon arrival at the jobsite to verify proper batching. Observe mix consistency and adding of water as required to achieve target slumps in mix designs. Record the amount of water added and note if it exceeds that allowed in the mix design. The responsibility for adding water to trucks at the job site shall rest only with the Contractor's designated representative. The Contractor is responsible that all concrete placed in the field is in conformance to the Contract Documents.
   d. Obtain concrete test cylinders as specified below.
   e. Perform tests to determine slump, concrete temperature, unit weight, and air entrainment as specified below. The slump tests shall be made on concrete taken from the same location from which the concrete for the test cylinders is obtained.
   f. Record information for concrete test reports as specified below.
   g. Pick up and transport to Laboratory, cylinders cast the previous day.

3. During concrete placing, provide continuous monitoring to:

   a. Verify that the concrete is not over 90 minutes old at the time of placement.
   b. Verify that Hot-Weather or Cold-Weather techniques are being applied as required.
   c. Verify that concrete deposited is uniform and that vertical drop does not exceed six feet and is not permitted to drop freely over reinforcement causing segregation.
   d. Verify that there are no cold joints.
   e. Verify that the concrete is properly vibrated.

f. Verify that the finishing of the concrete surface is done according to specifications.
g. Verify that sawcut control joints on slab-on-grades are cut within 12 hours of placement.
h. Verify that the formwork has remained stable during the concreting operation.
i. Inspect bolts to be installed in concrete for proper grade, size and length and verify they have been properly installed to the specified embedment.

4. In-situ Concrete Strength Verification: The Testing Laboratory shall verify that the concrete has reached the required minimum strength before form removal by evaluating the specified tests.

a. If concrete strength for form stripping is to be determined using field-cured cylinders, one additional cylinder per set will be required for formed slab and pan joist floors for the purpose of evaluating the concrete strength at the time of form stripping. This cylinder shall be stored on the floor where form removal is to occur under the same exposure conditions as the floor concrete. The cylinder shall be cured under field conditions in accordance with ASTM C31. Field cured test cylinders shall be molded at the same time and from the same samples as Laboratory cured test specimens. The cylinder shall be broken at the time of form removal as directed by the Contractor. The Contractor shall reimburse the Owner for the cost of making and testing these cylinders.
b. If concrete strength for form stripping is to be determined using the Maturity Method, the Testing Laboratory shall verify that the requirements of ASTM C 1074 are being followed and that the proper criteria for determining concrete strength by this method has been established and is being followed.

5. After Concrete Floor Placing and Finishing

a. Verify that the curing process is according to specifications and that any curing compound used is applied in accordance with manufacturer's recommendations.

b. Floor Flatness and Levelness Measuring
1) The Testing Service providing Services shall measure the floor for flatness and levelness according to ASTM E 1155.
2) Measurement of the finished concrete surface profile for any test section shall be made when requested by the Representative at his option. Notwithstanding, measurements shall be made within 24 hours after completion of finishing operations. The Contractor shall be notified immediately after the measurements of any section are complete and a written report of the floor measurement results shall be submitted within 72 hours after finishing operations are complete.
3) The concrete surface profile shall be measured using equipment manufactured for the purpose such as a Dipstick Floor Profiler as manufactured by the Edward W. Face Company in Norfolk, Virginia, F-Meters manufactured by Allen Face & Company in Norfolk, Virginia, optical, or laser means or other method specified in ASTM E 1155.
4) Each floor test section and the overall floor area shall conform to the two-tiered measurement standard as specified herein.
a) Minimum Local Value (MLV). The minimum local F_F/F_L values represent the absolute minimum surface profile that will be acceptable in any one floor test section.
b) Specified Overall Value (SOV). The specified overall F_F/F_L values represent the minimum values acceptable for all combined floor test sections representing the overall floor.
5) For purposes of this specification a floor test section is defined as the smaller of the following areas:
a) The area bounded by column and/or wall lines.
b) The area bounded by construction and/or control joint lines.

c) Any combination of column lines and/or control joint lines.
d) Test sample measurement lines within each test section shall be multidirectional along two orthogonal lines as defined by ASTM E 1155.
e) The precise layout of each test section shall be determined by the Testing Laboratory and shall be submitted for Architect/Engineer review and approval.

6) The contractor shall provide test results to the floor polishing contractor for their review and approval. Any concrete not meeting flatness requirements for polishing shall be removed and replaced at contractor's expense.

c. Testing of Concrete Floor Slabs for Acceptability to Receive an Adhesive-Applied, Low-Permeable Floor Covering

1) The following tests shall be performed by the Testing Laboratory as a part of quality assurance testing to insure that the proper moisture condition and alkalinity of the substrate has been achieved prior to installing adhesive-applied, low-permeability floor coverings such as vinyl composition tile (VCT), linoleum, sheet vinyl, vinyl-backed carpet, rubber, athletic flooring, synthetic turf, wood, acrylic terrazzo, thin-set tile, epoxy overlays and adhesives, et.al.

2) Moisture Vapor Emission Rate: Perform testing according to ASTM F 1869 to determine if the moisture emission rate from the floor is below the flooring manufacturer's maximum recommended value but not greater than 5lbs/1000sq.ft./24h.

3) Relative Humidity Determination Test: As an alternate to the Moisture Vapor Emission Rate Test, and if agreed to by the Contractor, Architect and Owner, perform testing according to ASTM F 2170 to determine if the relative humidity of the concrete slab is below the flooring manufacturer's maximum recommended value but not greater than 75%.

4) Alkalinity Testing: Perform testing in accordance with ASTM F 710-03, paragraph 5.3, to determine if the pH level of the concrete slab surface is below the flooring manufacturer's maximum recommended value but not greater than 10. Perform one test per 1000 sq. ft. with a minimum of three tests within the total area being tested.

6. The job site inspector shall report any irregularities that occur in the concrete at the job site or test results to the Contractor, Architect, Owner, and Engineer.

C. Concrete Test Cylinders: The Testing Laboratory shall mold and test concrete test cylinders as described below.

1. Cylinder Molding and Testing: Cylinders for strength tests shall be molded and Laboratory cured in accordance with ASTM C31 and tested in accordance with ASTM C39.

2. Field Samples: Field samples for strength tests shall be taken in accordance with ASTM C172.

3. Frequency of Testing: Each set of test cylinders shall consist of a minimum of four standard test cylinders. A set of test cylinders shall be made according to the following minimum frequency guidelines:

a. One set for each class of concrete taken not less than once a day.
b. Spread Footings: One set for each 50 cubic yards or fraction thereof.
c. Floors: One set for each 150 cubic yards or fraction thereof but not less than one set for each 5000 square foot of floor area.
d. All Other Concrete: A minimum of one set for each 150 cubic yards or fraction thereof.
e. No more than one set of cylinders at a time shall be made from any single truck.
f. If the total volume of concrete is such that the frequency of testing as specified above would provide less than five strength tests for a given class of concrete, tests shall be

made from at least five randomly selected batches or from each batch if fewer than five batches are used.

g. The above frequencies assume that one batch plant will be used for each pour. If more than one batch plant is used, the frequencies cited above shall apply for each plant used.

4. The cylinders shall be numbered, dated, and the point of concrete placement in the building recorded.

5. For concrete specified on the drawings to reach the required strength at 28 days, break one of the four cylinders of the set at seven days, two at 28 days, and one at 56 days.

6. Cylinder Storage Box: The Contractor shall be responsible for providing a protected concrete cylinder wooden storage box at a point on the job site mutually agreeable with the Testing Laboratory for the purpose of storing concrete cylinders until they are transported to the Laboratory. The box shall be constructed and equipped to maintain the environment specified for initial curing in ASTM C31.

7. Transporting Cylinders: The Testing Laboratory shall be responsible for transporting the cylinders to the Laboratory in a protected environment such that no damage or ill effect will occur to the concrete cylinders including loss of moisture, freezing temperatures or jarring.

8. Information on Concrete Test Reports: The Testing Laboratory shall make and distribute concrete test reports after each job cylinder is broken. Such reports shall contain the following information:

   a. Truck number and ticket number
   b. Concrete Batch Plant
   c. Mix design number
   d. Accurate location of pour in the structure
   e. Strength requirement
   f. Date cylinders made and broken
   g. Technician making cylinders
   h. Concrete temperature at placing
   i. Air temperature at point of placement in the structure
   j. Amount of water added to the truck at the batch plant and at the site and whether or not it exceeds the amount allowed by the mix design
   k. Slump
   l. Unit weight
   m. Air content
   n. Cylinder compressive strengths with type of failure if concrete does not meet Specification requirements. Seven day breaks are to be flagged if they are less than 60% of the required 28 day strength. 28 day breaks are to be flagged if either cylinder fails to meet Specification requirements.

9. Standards for Tests of Concrete :

   a. Slump Tests: Slump Tests (ASTM C143) shall be made at the beginning of concrete placement for each batch plant and for each set of test cylinders made. The slump test shall be made from concrete taken from the end of the concrete truck chute. The concrete shall be considered acceptable if the slump is within plus or minus 1 inch of the slump noted on the mix design submittal form for that class of concrete.
   b. Air Entrainment: Air entrainment tests (ASTM C231 or C173, C173 only for lightweight concrete) shall be made at the same time slump tests are made as cited above.
   c. Concrete Temperature: Concrete temperature at placement shall be measured (ASTM C1064) at the same time slump tests are made as cited above.

d. Unit Weight Test: ASTM C138

10. Evaluation and Acceptance of Concrete:

a. Strength Test: A strength test shall be defined as the average strength of two cylinder breaks from each set of cylinders tested at the time indicated above.
b. Quality Control Charts and Logs: The Testing Laboratory shall keep the following quality control logs and charts for each class of concrete containing more than 2,000 cubic yards. The records shall be kept for each batch plant and submitted on a weekly basis with cylinder test reports:
1) Number of strength tests made to date.
2) Strength test results containing the average of all strength tests to date, the high test result, the low test result, the standard deviation, and the coefficient of variation.
3) Number of tests under specified strength.
4) A histogram plotting the number of strength test cylinders versus compressive strength.
5) Quality control chart plotting compressive strength test results for each test.
6) Quality control chart plotting moving average for strength where each point plotted is the average strength of three previous test results.
7) Quality control chart plotting moving average for range where each point plotted is the average of 10 previous ranges.

c. Acceptance Criteria: The strength level of an individual class of concrete shall be considered satisfactory if both of the following requirements are met:
1) The average of all sets of three consecutive strength tests equal or exceed the required f'c.
2) No individual strength test falls below the required f'c by more than the greater of 10% of f'c or 500 PSI.

d. If either of the above requirements is not met, the Testing Laboratory shall immediately notify the Engineer by telephone. Steps shall immediately be taken to increase the average of subsequent strength tests.

D. Investigation of Low Strength Concrete Test Results:

1. Cost of Investigations for Low Strength Concrete shall be the responsibility of the Contractor.

2. Scope of Investigations: See Specification Section 033000, Cast-In-Place Concrete, for the investigations that may be required by the Engineer. The Testing Laboratory will conduct these investigations.

E. Causes for Rejection of Concrete: The Contractor shall reject concrete delivered to the site for any of the following reasons:

1. Wrong class of concrete (incorrect mix design number).

2. Environmental Conditions: Environmental condition limits shall be as follows unless appropriate provisions in concreting practices have been made for cold or hot weather:

a. Cold Weather: Air temperature must be 40°F and rising or the average daily temperature cannot have been lower than 40°F for 3 consecutive days unless the temperature rose above 50°F for at least one-half of any of those 24 hour periods.
b. Hot Weather: Environmental conditions must be such that cause an evaporation rate from the concrete surface of 0.2 lb./sq. ft./hr. or less as determined by Figure 2.1.5 in ACI 305R-91.

Concrete may be placed at other environmental condition ranges only with approval of the job inspector for the Testing Laboratory or other duly appointed representative.

3. Concrete with temperatures exceeding 95°F shall not be placed in the structure.

4. Air contents outside the limits specified in the mix designs.

5. Slumps outside the limits specified.

6. Excessive Age: Concrete shall be discharged within 90 minutes of plant departure or before it begins to set if sooner than 90 minutes unless approved by the Laboratory job inspector or other duly appointed representative.

F. Concrete Batch Trip Tickets: Concrete batch trip tickets shall be collected and retained by the Contractor. Compressive strength, slump, air, and temperature tests shall be identified by reference to a particular trip ticket. Tickets shall contain the information specified in ASTM C94. Each ticket shall also show the amount of water that may be added in the field for the entire batch that will not exceed the specified water cement ratio for the design mix. The Contractor and Testing Laboratory shall immediately notify the Architect/Engineer and each other of tickets not meeting the criteria specified.

3.5 STRUCTURAL STEEL

A. Contract Obligations:

1. Contractor Responsibility: The Contractor shall pay for initial shop and field inspections and tests as required during the fabrication and erection of the structural steel.

2. Testing Laboratory Responsibility: The inspection by the Testing Laboratory of the Fabricator's work shall be in sequence, timely, and performed in such a manner so that corrections can be made without delaying the progress of the work. Inspections shall be performed by qualified technicians with a minimum of two years experience in structural steel testing and inspection. See "Qualifications of Testing Laboratory" section for special requirements for welding inspectors. The Testing Laboratory shall provide test reports of inspections. All test reports shall indicate types and locations of defects found during inspection, the measures required and performed to correct such defects, statements of final approval of welding and bolting of shop and field connections, and other fabrication and erection data pertinent to the safe and proper welding and bolting of shop and field connections. In addition to the parties listed in this Specification the Fabricator and Erector shall receive copies of the test reports.

3. Rejection of Material or Workmanship: The Owner, Architect, Engineer, and Testing Laboratory reserve the right to reject any material or workmanship not in conformance with the Contract Documents at any time during the progress of the work. However, this provision does not allow waiving the obligation for timely, in sequence inspections.

B. Field Inspections: The Testing Laboratory shall provide the following inspections in the field:

1. Obtain the planned erection procedure, and review with the Erectors supervisory personnel.

2. Check the installation of base plates for proper leveling, grout type, and grout application.

3. Check structural steel and cold-formed steel deck as received in the field for possible shipping damage, workmanship, and identification marking to conform to AISC 360 for structural steel and as specified ASTM standards for other steel and steel deck.

4. Verify that surveys are occurring as specified to check plumbness and frame alignment as erection progresses. Review the submitted survey report.

5. Conduct welding inspection and verification testing per detailed requirement of section D-Welding Inspection and Testing below.

6. Conduct high-strength bolting inspection per detailed requirements of Section E – High-Strength Bolting and Testing below.

7. Periodically inspect the steel frame joint details such as bracing and stiffening, member locations, and connection details for compliance with approved construction documents.

8. Inspect 100% of the column compression and base joints for verification that gaps in contact bearing do not exceed 1/16 inch. Gaps greater than 1/16 inch but less than 1/4 inch shall be reported to the Owner and Engineer for assessment. All gaps greater than 1/4 inch shall be shimmed with non-tapered mild steel shims.

9. Endeavor to guard the Owner against the Contractor cutting, grinding, reaming, or making any other field modification to structural steel without the prior approval of the Engineer. Report any noted unauthorized modifications to the Owner and Engineer.

C. Weld Inspection and Testing: The Testing Laboratory shall make the following inspections and tests of the welds and welding processes. Welds performed in the fabricating shop may be inspected in the field unless continuous monitoring of the welding process is herein specified or if access in the field due to other work or shop finishes makes field inspection impractical:

1. Approve Welding Procedure Specifications submitted by the Contractor. Approve any changes submitted by the Contractor to any WPS that has already been approved. Obtain the Welding Procedure Qualification Record (WPQR) for each successful WPS qualification.

2. Verify welder qualifications either by certification and/or by retesting. Obtain welder certificates.

3. Verify welding electrodes to be used and other welding consumables as the job progresses.

4. Periodically observe joint preparation, assembly practice, welding techniques including preheating and sequence, and the performance of welders with sufficient frequency to assure compliance with code and contract document requirements. Check preheating to assure conformance with AWS D1.1, Section 5.6. Verify procedure for control of distortion and shrinkage stresses.

5. Observe joint preparation and fit up, backing strips, and runout plates for welded moment connections and column splices.

6. Periodically provide visual inspection of the root pass of partial and complete joint penetration welds.

7. Visually inspect 100 % of welds for proper size, length, location, and weld quality in accordance with AWS D1.1 requirements. Unless specifically noted otherwise, all welding shall be considered statically loaded nontubular connections

8. Visually inspect 100% of the welding or other attachment method of steel deck to the structure.

9. Visually inspect 100% of completed shear connectors in each beam and perform bend tests as required according to inspection procedures outlined in AWS D1.1. In addition, perform field bend tests on an additional 2% of completed shear connectors in each beam but not less than one connector per beam

10. Visually inspect 100% of the welds of anchors to embedded plates that are to be cast into concrete elements.

11. In addition to the inspections above, perform the following:

    a. Continuously monitor and observe joint preparation, assembly practice, welding techniques including preheating and sequence, and the performance of welders for 100% of complete and partial joint penetration welds, multipass fillet welds, and single-pass fillet welds greater than 5/16 inch. Check preheating to assure conformance with AWS D1.1, Section 5.6. Verify procedure for control of distortion and shrinkage stresses.
    b. Periodically monitor welding of single-pass fillet welds that are less than or equal to 5/16 inch.
    c. Periodically monitor the method of attaching the steel floor and roof decking to the structural frame.
    d. Periodically monitor the welding of headed studs to floor beams.

12. Weld Verification Testing Scope:

    a. Perform nondestructive examination services using a qualified technician with the necessary equipment to perform the following:
        1) Nondestructive examination conducted in accordance with the specific requirements for the item being examined including radiographic (RT), ultrasonic (UT), magnetic particle (MT), or dye-penetrant inspection (PT). Nondestructive inspection procedures shall conform to AWS D1.1.
        2) Interpret, record, and report results of the nondestructive tests.
        3) Mark for repair, any area not meeting Specification requirements. Correction of rejected welds shall be made in accordance with AWS D1.1.
        4) Re-examine repair areas and interpret, record, and report the results of examinations of repair welds.
        5) Verify that quality of welds meet the requirements of AWS D1.1..
    b. Fillet welds. provide the following:
        1) MT test a minimum of 10% of the length of each fillet weld exceeding 5/16".
        2) Periodic MT testing of representative fillet welds 5/16" and less but need not exceed 10% of all such welds, except as provided in (3) below.
        3) Increase MT testing rate for welders having a high rejection rate as required to ensure acceptable welds.
    c. Partial joint penetration welds, including flare-bevel groove welds. provide the following:
        1) MT test a minimum of 25% of the length of each PJP weld exceeding 5/16" effective throat.
        2) Periodic MT testing of representative PJP welds 5/16” and less but need not exceed 10% of all such welds, except as provided in (3) below.
        3) Increase MT testing rate for welders having a high rejection rate as required to ensure acceptable welds.
    d. Complete joint penetration welds. provide the following:
        1) All CJP welds exceeding 5/16" thickness shall be 100% UT tested per AWS D1.1 Chapter 6 Part F. The testing laboratory shall review the CJP joints to determine where geometry or accessibility precludes the use of standard scanning patterns per AWS D1.1 Chapter 6 Part F. At these locations the testing laboratory shall develop

and submit for approval a written testing procedure in accordance with AWS D1.1 Annex K.

2) Periodic MT testing of representative CJP welds 5/16" and less not to exceed 10% of all such welds, except as provided in (3) below.

3) Increase MT testing rate for welders having a high rejection rate as required to ensure acceptable welds.

e. Acceptance Criteria

1) Visual, MT, PT shall be per AWS D1.1 Table 6.1.

2) UT testing shall be per AWS D1.1 6.13.1 and Table 6.2.

f. Welds of Anchors to Embedded Plates:

1) Headed Studs: Perform field bend tests according to AWS D1.1 on 2% of the studs welded to plates, but not less than one stud per plate.

2) Deformed Bar Anchors: Perform MT testing on 10% of deformed bar anchors larger than #5 bar.

g. The costs of repairing defective welds and the costs of retesting by the Testing Laboratory providing services for the Owner shall be borne by the Contractor. If removal of a backing strip is required by the Testing Laboratory to investigate a suspected weld defect, such cost shall be borne by the Contractor.

D. High-Strength Bolting Inspection and Testing: The Testing Laboratory shall perform the following inspections and test for connections joined with high-strength bolting. Bolting performed in the shop may be inspected in the field unless continuous monitoring of the bolting operation is herein specified:

1. Observe preinstallation verification testing of the pretensioning method to be used in accordance with the requirements of the "Specification for Structural Joints Using ASTM A325 and A490 Bolts". Daily check the calibration of impact wrenches used in field bolted connections.

2. Inspect bolt installation for 100% of high strength bolted connections according to inspection procedures outlined in the "Specification for Structural Joints Using ASTM A325 or A490 Bolts".

3. Perform Arbitration Testing and Inspection according to procedures outlined in the "Specification for Structural Joints using ASTM A325 or A490 Bolts" when a disagreement exists between the Testing Laboratory and the Fabricator as to the minimum tension of installed bolts that have been inspected according to paragraph above.

4. Monitoring of Bolting Installation:

a. Continuous Monitoring: The Testing Laboratory shall be continuously present and monitor the bolting installation for compliance with the selected procedure for installation as specified in the "Specification for Structural Joints Using ASTM A325 and A490 Bolts" for joints using high-strength bolts that are designated on the plans as Pretensioned (PT) or Slip-Critical (SC) type joints and that are being installed using the calibrated wrench method or the turn-of-nut without matchmarking method of installation.

b. Periodic Monitoring: All other joint types and bolt installation methods may be monitored on a periodic basis.

3.6 NON-SHRINK GROUT FOR BASE PLATES, BEARING PLATES AND PRECAST WALL PANELS

A. Compressive Strength Tests (by the Testing Laboratory): Compressive strength of grout shall be determined by testing grout cubes according to the requirements of ASTM C109 - Modified. Test one set of three cubes at 1 day, and one set of three cubes at 28 days.

B. Frequency of Testing: One set of cubes (6 cubes) shall be made for every ten base plates and bearing plates or fraction thereof but not less than one set for each day's operation. One set of cubes shall be made for each day's operation of grouting wall panels.

3.7 MASONRY

A. Verification Testing Frequency: Verification of masonry strength (f'_m) will be performed at the beginning of masonry construction and during construction for each 5000 square feet of wall area or portion thereof.

B. Concrete Masonry Unit: For each type of concrete masonry unit indicated, verify compliance with ASTM C90 and the strength required by design. Verification may be by reviewing certification from unit producer showing compliance.

C. Clay Masonry Unit: For each type of clay masonry unit indicated provide compressive strength tests according to ASTM C67 at the frequency specified.

D. Mortar:

1. Throughout construction, verify the proportions of the site-prepared mortar mix comply with the requirements of ASTM C270 for the type specified.

2. Verify the proportions of materials in premixed or preblended mortar comply with the requirements of ASTM C270 for the type specified as delivered to the site.

E. Grout:

1. Prior to grouting, verify the proportions of site-prepared grout mix comply with the requirements of ASTM C476 for each type of grout used.

2. Verify the proportions of materials in premixed or preblended grout comply with the requirements of ASTM C476 as delivered to the site.

3. For each mix design provide one set of compressive strength tests according to ASTM C1019 at the frequency specified.

4. Report test results in writing and in form specified under each test method, to Architect and Contractor, on same day tests are made.

5. Retests: Where tests indicate non-compliance with specified requirements, additional testing shall be performed at the frequency of two additional tests for each unsatisfactory test. The cost of such additional testing shall be the responsibility of the Contractor. Where retesting fails to indicate conformance with specified requirements, any masonry construction represented by unsatisfactory tests shall be removed and replaced with acceptable masonry construction.

F. Mortar Joints: Throughout construction, verify that mortar joints are being prepared in accordance with these specifications and ACI 530.1/ASCE 6/TMS 602.

G. Reinforcement and Connectors: Prior to grouting, verify the size, grade, type and placement of reinforcement and connectors is in compliance with specified requirements.

H. Grouting: Prior to any grouting procedure, the grout space shall be inspected to verify that it is clean and that cleanouts, if required, are in place and conform to requirements. Verify through continuous inspection that the placement of grout is in compliance with the requirements of the contract specifications and ACI 530.1/ASCE 6/TMS 602.

I. Anchors: Continuously inspect the installation of anchors including anchors of masonry to other structural members, frames, or construction verifying their type, size, location, and installation.

J. Welding of Reinforcing Bars: Continuously observe the welding of reinforcing bars.

K. Installed items: Verify that installed flashing, weep holes, construction joints, control joints and wall vents are installed in accordance with specifications.

3.8 OPEN WEB STEEL JOISTS

A. Scope: The Testing Laboratory shall perform inspection of open web steel joists as herein described.

B. Field Inspection: The duties of the Testing Laboratory shall be as follows:

1. Visually inspect a representative sample of joist shop welds not to exceed 10% of such welds, for compliance with SJI specifications. Increase inspection frequency if inspected welds incur a high rejection rate.

2. Visually inspect 100% of welded chord splices for compliance with SJI and project specifications.

3. Inspect joists for damage during shipment.

4. Verify proper bearing of joist supports.

5. Verify camber requirements of joists arriving in the field.

6. Confirm bridging size and location.

7. Review field welder qualifications by certification or verify by retesting. Obtain welder certificates.

8. Visually inspect 100% of field attachment of joists to supports (welding or bolting).

9. Perform Magnetic Particle testing (MT) on representative field welds not to exceed 10% of such welds unless rejection rates become high, in which case, frequency inspection shall be increased to ensure acceptable welding.

10. Confirm bolting of joists to supports at column lines as required by OSHA requirements.

11. Verify that no joists have been damaged during erection.

3.9 STEEL ROOF DECKING

A. Scope: The Testing Laboratory shall perform inspection of open web steel roof decking as herein described.

B. Field Inspection: The duties of the Testing Laboratory shall be as follows

1. Welding or Self-drilling Fasteners

a. Visually inspect 100% of the attachment of the steel deck to the structural frame and at side laps.
b. Periodically monitor the method of attaching the steel deck to the structural frame.

2. Powder-actuated or pneumatically-driven pins

a. Visually inspect 100% of the Powder-Actuated or Compressed-Air fasteners using an inspection gauge supplied by the manufacturer to verify that the stand-off distance from the top of the deck is in accordance with the manufacturer's requirements.

END OF SECTION 01 4529

SECTION 01 5000 – TEMPORARY FACILITIES AND CONTROLS

PART 1 - GENERAL

1.1 RELATED DOCUMENTS

A. Drawings and general provisions of the Contract, including General and Supplementary Conditions and other Division 1 Specification Sections, apply to this Section.

1.2 SUMMARY

A. This Section includes requirements for temporary facilities and controls, including temporary utilities, support facilities, and security and protection facilities.

B. Temporary utilities include, but are not limited to, the following:

1. Sewers and drainage.
2. Water service and distribution.
3. Sanitary facilities, including toilets, wash facilities, and drinking-water facilities.
4. Heating and cooling facilities.
5. Ventilation.
6. Electric power service.
7. Lighting.
8. Telephone service.

C. Support facilities include, but are not limited to, the following:

1. Project identification and temporary signs.
2. Waste disposal facilities.
3. Field offices.
4. Storage and fabrication sheds.
5. Lifts and hoists.
6. Temporary stairs.
7. Construction aids and miscellaneous services and facilities.

D. Security and protection facilities include, but are not limited to, the following:

1. Environmental protection.
2. Stormwater control.
3. Tree and plant protection.
4. Pest control.
5. Site enclosure fence.
6. Security enclosure and lockup.
7. Barricades, warning signs, and lights.
8. Covered walkways.
9. Temporary enclosures.
10. Temporary partitions.
11. Fire protection.

E. Related Sections include the following:

1. Division 1 Section "Execution" for progress cleaning requirements.

2. Division 31 Section "Termite Control" for pest control.
3. Divisions 2 through 34 for temporary heat, ventilation, and humidity requirements for products in those Sections.

1.3 DEFINITIONS

A. Permanent Enclosure: As determined by Architect, permanent or temporary roofing is complete, insulated, and weathertight; exterior walls are insulated and weathertight; and all openings are closed with permanent construction or substantial temporary closures.

1.4 USE CHARGES

A. General: Cost or use charges for temporary facilities are not chargeable to Owner or Architect and shall be included in the Contract Sum. Allow other entities to use temporary services and facilities without cost, including, but not limited to, the following:

1. Owner's construction forces.
2. Occupants of Project.
3. Architect.
4. Testing agencies.
5. Personnel of authorities having jurisdiction.

B. Water Service: Use water from existing City of Wichita water system with metering. Include use charges in the Contract Sum.

C. Electric Power Service: Use electric power from available utility source with metering. Include use charges in the Contract Sum.

D. Should permanent systems not be available it is Contractor’s responsibility to provide water and power.

1.5 QUALITY ASSURANCE

A. Standards: Comply with ANSI A10.6, NECA's "Temporary Electrical Facilities," and NFPA 241.

1. Trade Jurisdictions: Assigned responsibilities for installation and operation of temporary utilities are not intended to interfere with trade regulations and union jurisdictions.
2. Electric Service: Comply with NECA, NEMA, and UL standards and regulations for temporary electric service. Install service to comply with NFPA 70.

B. Tests and Inspections: Arrange for authorities having jurisdiction to test and inspect each temporary utility before use. Obtain required certifications and permits.

1.6 PROJECT CONDITIONS

A. Temporary Utilities: At earliest feasible time, change over from use of temporary service to use of permanent service.

1. Temporary Use of Permanent Facilities: Installer of each permanent service shall assume responsibility for operation, maintenance, and protection of each permanent service during its use as a construction facility before Owner's acceptance, regardless of previously assigned responsibilities.

B. Conditions of Use: The following conditions apply to use of temporary services and facilities by all parties engaged in the Work:

1. Keep temporary services and facilities clean and neat.
2. Relocate temporary services and facilities as required by progress of the Work.

PART 2 - PRODUCTS

2.1 MATERIALS

A. General: Provide new materials. Undamaged, previously used materials in serviceable condition may be used if approved by Architect. Provide materials suitable for use intended.

B. Portable Chain-Link Fencing: Minimum 2-inch 9-gage, galvanized steel, chain-link fabric fencing; minimum 6 feet high with galvanized steel pipe posts; minimum 2-3/8-inch OD line posts and 2-7/8-inch OD corner and pull posts, with 1-5/8-inch OD top and bottom rails. Provide concrete or steel bases for supporting posts.

C. Lumber and Plywood: Comply with requirements in Division 6 Section "Rough Carpentry."

D. Gypsum Board: Minimum 1/2 inch thick by 48 inches wide by maximum available lengths; regular-type panels with tapered edges. Comply with ASTM C 36.

E. Insulation: Unfaced mineral-fiber blanket, manufactured from glass, slag wool, or rock wool; with maximum flame-spread and smoke-developed indices of 25 and 50, respectively.

F. Paint: Comply with requirements in Division 9 Section "Painting."

G. Tarpaulins: Fire-resistive labeled with flame-spread rating of 15 or less.

H. Water: Potable.

2.2 EQUIPMENT

A. General: Provide equipment suitable for use intended.

B. Field Offices: Mobile units with lockable entrances, operable windows, and serviceable finishes; heated and air conditioned; on foundations adequate for normal loading.

C. Fire Extinguishers: Hand carried, portable, UL rated. Provide class and extinguishing agent as indicated or a combination of extinguishers of NFPA-recommended classes for exposures.

1. Comply with NFPA 10 and NFPA 241 for classification, extinguishing agent, and size required by location and class of fire exposure.

D. Self-Contained Toilet Units: Single-occupant units of chemical, aerated recirculation, or combustion type; vented; fully enclosed with a glass-fiber-reinforced polyester shell or similar nonabsorbent material.

E. Drinking-Water Fixtures: Containerized, tap-dispenser, bottled-water drinking-water units, including paper cup supply.

F. Heating Equipment: Unless Owner authorizes use of permanent heating system, provide vented, self-contained, liquid-propane-gas or fuel-oil heaters with individual space thermostatic control.

1. Use of gasoline-burning space heaters, open-flame heaters, or salamander-type heating units is prohibited.
2. Heating Units: Listed and labeled, by a testing agency acceptable to authorities having jurisdiction, and marked for intended use for type of fuel being consumed.
3. Verify temporary heating equipment fumes will not impair quality of finish installation. Damaged finishes due to heating fumes shall be removed and replaced at Contractors expense.

G. Electrical Outlets: Properly configured, NEMA-polarized outlets to prevent insertion of 110- to 120-V plugs into higher-voltage outlets; equipped with ground-fault circuit interrupters, reset button, and pilot light.

H. Power Distribution System Circuits: Where permitted and overhead and exposed for surveillance, wiring circuits, not exceeding 125-V ac, 20-A rating, and lighting circuits may be nonmetallic sheathed cable.

PART 3 - EXECUTION

3.1 INSTALLATION, GENERAL

A. Locate facilities where they will serve Project adequately and result in minimum interference with performance of the Work. Relocate and modify facilities as required.

B. Provide each facility ready for use when needed to avoid delay. Maintain and modify as required. Do not remove until facilities are no longer needed or are replaced by authorized use of completed permanent facilities.

3.2 TEMPORARY UTILITY INSTALLATION

A. General: Engage appropriate local utility company to install temporary service or connect to existing service. Where utility company provides only part of the service, provide the remainder with matching, compatible materials and equipment. Comply with utility company recommendations.

1. Arrange with utility company to make connections for temporary services.
2. Provide adequate capacity at each stage of construction. Before temporary utility is available, provide trucked-in services.
3. Obtain easements to bring temporary utilities to Project site where Owner's easements cannot be used for that purpose.

B. Sewers and Drainage: If sewers are available, provide temporary connections to remove effluent that can be discharged lawfully. If sewers cannot be lawfully used for discharge of effluent, provide containers to remove and dispose of effluent off-site in a lawful manner.

1. Filter out excessive soil, construction debris, chemicals, oils, and similar contaminants that might clog sewers or pollute waterways before discharge.
2. Connect temporary sewers to municipal system or private system as directed by sewer department officials.

3. Maintain temporary sewers and drainage facilities in a clean, sanitary condition. After heavy use, restore normal conditions promptly.
4. Provide temporary filter beds, settlement tanks, separators, and similar devices to purify effluent to levels acceptable to authorities having jurisdiction.

C. Water Service: Contractor will be responsible for all costs associated with connections to existing service. At project completion, restore these facilities to condition existing before initial use.

1. Provide rubber hoses as necessary to serve Project site.
2. As soon as water is required, extend service to form a temporary water distribution system. Provide yard hydrant and hose bib connections so that all areas of new construction can be reached with a 100-foot hose.
3. Where installations below an outlet might be damaged by spillage or leakage, provide a drip pan of suitable size to minimize water damage. Drain accumulated water promptly from pans.

D. Sanitary Facilities: Provide temporary toilets, wash facilities, and drinking-water fixtures. Comply with regulations and health codes for type, number, location, operation, and maintenance of fixtures and facilities.

1. Disposable Supplies: Provide toilet tissue, paper towels, paper cups, and similar disposable materials for each facility. Maintain adequate supply. Provide covered waste containers for disposal of used material.
2. Toilets: Use of new construction toilet facilities will not be permissible. Install self-contained toilet units. Shield toilets to ensure privacy. Provide separate facilities for male and female personnel.
3. Wash Facilities: Install wash facilities supplied with potable water at convenient locations for personnel who handle materials that require wash up. Dispose of drainage properly. Supply cleaning compounds appropriate for each type of material handled.

    a. Provide safety showers, eyewash fountains, and similar facilities for convenience, safety, and sanitation of personnel.

4. Drinking-Water Facilities: Provide bottled-water, drinking-water units.

E. Heating and Cooling: Provide temporary heating and cooling required by construction activities for curing or drying of completed installations or for protecting installed construction from adverse effects of low temperatures or high humidity. Select equipment from that specified that will not have a harmful effect on completed installations or elements being installed.

1. Maintain a minimum temperature of 45 deg F in permanently enclosed portions of building for normal construction activities, and 55 deg F for finishing activities and areas where finished Work has been installed.

F. Ventilation and Humidity Control: Provide temporary ventilation required by construction activities for curing or drying of completed installations or for protecting installed construction from adverse effects of high humidity. Select equipment from that specified that will not have a harmful effect on completed installations or elements being installed. Coordinate ventilation requirements to produce ambient condition required and minimize energy consumption.

G. Electric Distribution: Provide receptacle outlets adequate for connection of power tools and equipment.

1. Provide waterproof connectors to connect separate lengths of electrical power cords if single lengths will not reach areas where construction activities are in progress. Do not exceed safe length-voltage ratio.
2. Provide warning signs at power outlets other than 110 to 120 V.
3. Provide metal conduit, tubing, or metallic cable for wiring exposed to possible damage. Provide rigid steel conduits for wiring exposed on grades, floors, decks, or other traffic areas.
4. Provide metal conduit enclosures or boxes for wiring devices.
5. Provide 4-gang outlets, spaced so 100-foot extension cord can reach each area for power hand tools and task lighting. Provide a separate 125-V ac, 20-A circuit for each outlet.

H. Lighting: Provide temporary lighting with local switching that provides adequate illumination for construction operations and traffic conditions.

1. Install and operate temporary lighting that fulfills security and protection requirements without operating entire system.
2. Install exterior-yard site lighting that will provide adequate illumination for construction operations, traffic conditions, and signage visibility when the Work is being performed.

I. Telephone Service: Provide temporary telephone service throughout construction period for common-use facilities used by all personnel engaged in construction activities. Install separate telephone line for each field office and first-aid station. All telephone service will be at Contractor’s expense.

1. Provide additional telephone lines for the following:

   a. Provide a dedicated telephone line for each facsimile machine and computer with modem in each field office.

2. At each telephone, post a list of important telephone numbers.

   a. Police and fire departments.
   b. Ambulance service.

3. Provide an answering machine or voice-mail service on superintendent's telephone.

4. Provide e-mail service for project superintendent.

3.3 SUPPORT FACILITIES INSTALLATION

A. General: Comply with the following:

1. Locate field offices, storage sheds, sanitary facilities, and other temporary construction and support facilities for easy access.
2. Provide incombustible construction for offices, shops, and sheds located within construction area or within 30 feet of building lines. Comply with NFPA 241.
3. Maintain support facilities until near Substantial Completion. Remove at Substantial Completion. Personnel remaining after Substantial Completion will not be permitted to use permanent facilities, unless arraignments are made with the Owner's Representative.

B. Project Identification and Temporary Signs: Prepare Project identification and other signs in sizes approved by the Owner. Install project identification sign as shown on the drawings at the New York Street entrance to the site where directed by the Architect to inform public and

persons seeking entrance to Project. Provide directional signs at locations required to effectively direct traffic to or around construction site. Provide directional signs of similar construction and graphics to project sign or of standard painted metal and metal stakes. Signs shall be approximately 4 S.F. each. Do not permit installation of unauthorized signs.

C. Waste Disposal Facilities: Provide waste-collection containers in sizes adequate to handle waste from construction operations. Containerize and clearly label hazardous, dangerous, or unsanitary waste materials separately from other waste. Comply with Division 1 Section "Execution" for progress cleaning requirements.

1. If required by authorities having jurisdiction, provide separate containers, clearly labeled, for each type of waste material to be deposited.
2. Develop a waste management plan for Work performed on Project. Indicate types of waste materials Project will produce and estimate quantities of each type. Provide detailed information for on-site waste storage and separation of recyclable materials. Provide information on destination of each type of waste material and means to be used to dispose of all waste materials.
3. Coordinate ALL waste disposal with LEED requirements.

D. Common-Use Field Offices: In addition to those field offices required for use by the Contractors, provide a separate, insulated, weathertight, air-conditioned field office for use by the Owner's Representative and Architect; of sufficient size to accommodate required office personnel and meetings of 20 persons at Project site. Keep office clean and orderly.

1. Furnish and equip offices as follows:

a. Provide a room of not less than 300 sq. sq. ft. for Project meetings.
b. Contractor provided items:

1) Job Trailer, Electrical Power, AC/Heat, Telephone Line, High Speed Internet Line, Answering Machine, Conference Table, 20 Chairs, Desk, File Cabinets, Fax, Trash Service, Restroom Service, Copier/ Scanner, Markerboard & Tackboard.

2. Provide an electric heater with thermostat capable of maintaining a uniform indoor temperature of 68 deg F. Provide an air-conditioning unit capable of maintaining an indoor temperature of 72 deg F.
3. Provide fluorescent light fixtures capable of maintaining average illumination of 20 fc at desk height. Provide 110- to 120-V duplex outlets spaced at not more than 12-foot intervals, 1 per wall in each room.
4. Locate Field Offices on the project site within boundaries of construction limits or as directed by Owner.

E. Storage and Fabrication Sheds: Provide sheds sized, furnished, and equipped to accommodate materials and equipment involved, including temporary utility services. Sheds may be open shelters or fully enclosed spaces within building or elsewhere on-site.

1. All storage and fabrication structures must be pre approved by the Owner and Architect.

F. Lifts and Hoists: Provide facilities for hoisting materials and personnel. Truck cranes and similar devices used for hoisting materials are considered "tools and equipment" and not temporary facilities.

G. Temporary Stairs: Until permanent stairs are available, provide temporary stairs where ladders are not adequate. Cover finished, permanent stairs with protective covering of plywood or similar material so finishes will be undamaged at time of acceptance.

3.4 SECURITY AND PROTECTION FACILITIES INSTALLATION

A. Environmental Protection: Provide protection, operate temporary facilities, and conduct construction in ways and by methods that comply with environmental regulations and that minimize possible air, waterway, and subsoil contamination or pollution or other undesirable effects. Avoid using tools and equipment that produce harmful noise. Restrict use of noisemaking tools and equipment to hours that will minimize complaints from persons or firms near Project site.

B. Stormwater Control: Provide earthen embankments and similar barriers in and around excavations and subgrade construction, sufficient to prevent flooding by runoff of stormwater from heavy rains.

C. Tree and Plant Protection: Comply with requirements in Division 31 Section "Tree Protection."

D. Pest Control: Before deep foundation work has been completed, retain a local exterminator or pest-control company to recommend practices to minimize attraction and harboring of rodents, roaches, and other pests. Engage this pest-control service to perform extermination and control procedures at regular intervals so Project will be free of pests and their residues at Substantial Completion. Obtain extended warranty for Owner. Perform control operations lawfully, using environmentally safe materials.

E. Site Enclosure Fencing: Before construction operations begin, install portable chain-link enclosure fencing with lockable entrance gates. Locate to accommodate construction operations. Install in a manner that will prevent people, dogs, and other animals from easily entering site except by entrance gates.

1. Set fence posts in concrete or steel bases.
2. Provide gates in sizes and at locations necessary to accommodate delivery vehicles and other construction operations.
3. Maintain security by limiting number of keys and restricting distribution to authorized personnel. Provide Owner with one set of keys.

F. Security Enclosure and Lockup: Install substantial temporary enclosure around partially completed areas of construction. Provide lockable entrances to prevent unauthorized entrance, vandalism, theft, and similar violations of security.

G. Barricades, Warning Signs, and Lights: Comply with standards and code requirements for erecting structurally adequate barricades. Paint with appropriate colors, graphics, and warning signs to inform personnel and public of possible hazard. Where appropriate and needed, provide lighting, including flashing red or amber lights.

1. For safety barriers, sidewalk bridges, and similar uses, provide minimum 5/8-inch thick exterior plywood.

H. Temporary Enclosures: Provide temporary enclosures for protection of construction, in progress and completed, from exposure, foul weather, other construction operations, and similar activities. Provide temporary weathertight enclosure for building exterior.

1. Where heating or cooling is needed and permanent enclosure is not complete, provide insulated temporary enclosures. Coordinate enclosure with ventilating and material drying or curing requirements to avoid dangerous conditions and effects.
2. Vertical Openings: Close openings of 25 sq. ft. or less with plywood or similar materials.
3. Horizontal Openings: Close openings in floor or roof decks and horizontal surfaces with load-bearing, wood-framed construction.
4. Install tarpaulins securely using fire-retardant-treated wood framing and other materials.
5. Where temporary wood or plywood enclosure exceeds 100 sq. ft. in area, use fire-retardant-treated material for framing and main sheathing.

I. Temporary Fire Protection: Until fire-protection needs are supplied by permanent facilities, install and maintain temporary fire-protection facilities of types needed to protect against reasonably predictable and controllable fire losses. Comply with NFPA 241.

1. Provide fire extinguishers, installed on walls on mounting brackets, visible and accessible from space being served, with sign mounted above.

    a. Field Offices: Class A stored-pressure water-type extinguishers.
    b. Other Locations: Class ABC dry-chemical extinguishers or a combination of extinguishers of NFPA-recommended classes for exposures.
    c. Locate fire extinguishers where convenient and effective for their intended purpose; provide not less than one extinguisher on each floor at or near each usable stairwell.

2. Store combustible materials in containers in fire-safe locations.
3. Maintain unobstructed access to fire extinguishers, fire hydrants, temporary fire-protection facilities, stairways, and other access routes for firefighting. Prohibit smoking in hazardous fire-exposure areas.
4. Supervise welding operations, combustion-type temporary heating units, and similar sources of fire ignition.
5. Permanent Fire Protection: At earliest feasible date in each area of Project, complete installation of permanent fire-protection facility, including connected services, and place into operation and use. Instruct key personnel on use of facilities.
6. Develop and supervise an overall fire-prevention and first-aid fire-protection program for personnel at Project site. Review needs with local fire department and establish procedures to be followed. Instruct personnel in methods and procedures. Post warnings and information.

3.5 OPERATION, TERMINATION, AND REMOVAL

A. Supervision: Enforce strict discipline in use of temporary facilities. To minimize waste and abuse, limit availability of temporary facilities to essential and intended uses.

B. Maintenance: Maintain facilities in good operating condition until removal. Protect from damage caused by freezing temperatures and similar elements.

1. Maintain operation of temporary enclosures, heating, cooling, humidity control, ventilation, and similar facilities on a 24-hour basis where required to achieve indicated results and to avoid possibility of damage.
2. Prevent water-filled piping from freezing. Maintain markers for underground lines. Protect from damage during excavation operations.

C. Temporary Facility Changeover: Except for using permanent fire protection, as soon as available, do not change over from using temporary security and protection facilities to permanent facilities until Substantial Completion.

D. Termination and Removal: Remove each temporary facility when need for its service has ended, when it has been replaced by authorized use of a permanent facility, or no later than Substantial Completion. Complete or, if necessary, restore permanent construction that may have been delayed because of interference with temporary facility. Repair damaged Work, clean exposed surfaces, and replace construction that cannot be satisfactorily repaired.

1. Materials and facilities that constitute temporary facilities are the property of Contractor.
2. At Final Completion, clean and renovate permanent facilities used during construction period. Comply with final cleaning requirements in Division 1 Section "Closeout Procedures."

END OF SECTION 01 5000

SECTION 01 6000 - PRODUCT REQUIREMENTS

PART 1 - GENERAL

1.1 RELATED DOCUMENTS

A. Drawings and general provisions of the Contract, including General and Supplementary Conditions and other Division 01 Specification Sections, apply to this Section.

1.2 SUMMARY

A. Section includes administrative and procedural requirements for selection of products for use in Project; product delivery, storage, and handling; manufacturers' standard warranties on products; special warranties; and comparable products.

1.3 DEFINITIONS

A. Products: Items obtained for incorporating into the Work, whether purchased for Project or taken from previously purchased stock. The term "product" includes the terms "material," "equipment," "system," and terms of similar intent.

1. Named Products: Items identified by manufacturer's product name, including make or model number or other designation shown or listed in manufacturer's published product literature, that is current as of date of the Contract Documents.
2. New Products: Items that have not previously been incorporated into another project or facility. Products salvaged or recycled intact from other projects are not considered new products. New products can contain recycled raw materials.
3. Comparable Product: Product that is demonstrated and approved through submittal process to have the indicated qualities related to type, function, dimension, in-service performance, physical properties, appearance, and other characteristics that equal or exceed those of specified product.

B. Basis-of-Design Product Specification: A specification in which a specific manufacturer's product is named and accompanied by the words "basis-of-design product," including make or model number or other designation, to establish the significant qualities related to type, function, dimension, in-service performance, physical properties, appearance, and other characteristics for purposes of evaluating comparable products of additional manufacturers named in the specification.

1.4 ACTION SUBMITTALS

A. Comparable Product Requests: Submit request for consideration of each comparable product. Identify product or fabrication or installation method to be replaced. Include Specification Section number and title and Drawing numbers and titles.

1. Include data to indicate compliance with the requirements specified in "Comparable Products" Article.
2. Architect's Action: If necessary, Architect will request additional information or documentation for evaluation within one week of receipt of a comparable product request. Architect will notify Contractor of approval or rejection of proposed comparable product request within 15 days of receipt of request, or seven days of receipt of additional information or documentation, whichever is later.

a. Form of Approval: As specified in Division 01 Section "Submittal Procedures."

b. Use product specified if Architect does not issue a decision on use of a comparable product request within time allocated.

B. Basis-of-Design Product Specification Submittal: Comply with requirements in Division 01 Section "Submittal Procedures." Show compliance with requirements.

1.5 QUALITY ASSURANCE

A. Compatibility of Options: If Contractor is given option of selecting between two or more products for use on Project, select product compatible with products previously selected, even if previously selected products were also options.

1.6 PRODUCT DELIVERY, STORAGE, AND HANDLING

A. Deliver, store, and handle products using means and methods that will prevent damage, deterioration, and loss, including theft and vandalism. Comply with manufacturer's written instructions.

B. Delivery and Handling:
1. Schedule delivery to minimize long-term storage at Project site and to prevent overcrowding of construction spaces.
2. Coordinate delivery with installation time to ensure minimum holding time for items that are flammable, hazardous, easily damaged, or sensitive to deterioration, theft, and other losses.
3. Deliver products to Project site in an undamaged condition in manufacturer's original sealed container or other packaging system, complete with labels and instructions for handling, storing, unpacking, protecting, and installing.
4. Inspect products on delivery to determine compliance with the Contract Documents and to determine that products are undamaged and properly protected.

C. Storage:

1. Store products to allow for inspection and measurement of quantity or counting of units.
2. Store products that are subject to damage by the elements, under cover in a weathertight enclosure above ground, with ventilation adequate to prevent condensation.
3. Store foam plastic from exposure to sunlight, except to extent necessary for period of installation and concealment.
4. Comply with product manufacturer's written instructions for temperature, humidity, ventilation, and weather-protection requirements for storage.
5. Protect stored products from damage and liquids from freezing.

1.7 PRODUCT WARRANTIES

A. Warranties specified in other Sections shall be in addition to, and run concurrent with, other warranties required by the Contract Documents. Manufacturer's disclaimers and limitations on product warranties do not relieve Contractor of obligations under requirements of the Contract Documents.

1. Manufacturer's Warranty: Written warranty furnished by individual manufacturer for a particular product and specifically endorsed by manufacturer to Owner.
2. Special Warranty: Written warranty required by the Contract Documents to provide specific rights for Owner.

B. Special Warranties: Prepare a written document that contains appropriate terms and identification, ready for execution.

1. Manufacturer's Standard Form: Modified to include Project-specific information and properly executed.
2. Refer to Divisions 02 through 49. Sections for specific content requirements and particular requirements for submitting special warranties.

C. Submittal Time: Comply with requirements in Division 01 Section "Closeout Procedures."

PART 2 - PRODUCTS

2.1 PRODUCT SELECTION PROCEDURES

A. General Product Requirements: Provide products that comply with the Contract Documents, are undamaged and, unless otherwise indicated, are new at time of installation.

1. Provide products complete with accessories, trim, finish, fasteners, and other items needed for a complete installation and indicated use and effect.
2. Standard Products: If available, and unless custom products or nonstandard options are specified, provide standard products of types that have been produced and used successfully in similar situations on other projects.
3. Owner reserves the right to limit selection to products with warranties not in conflict with requirements of the Contract Documents.
4. Where products are accompanied by the term "as selected," Architect will make selection.
5. Descriptive, performance, and reference standard requirements in the Specifications establish salient characteristics of products.

B. Product Selection Procedures:
1. Manufacturer/Source: Where Specifications name a single manufacturer or source, provide a product by the named manufacturer or source that complies with requirements. Comparable products or substitutions for Contractor's convenience will not be considered.
2. Basis-of-Design Product: Where Specifications name a product, or refer to a product indicated on Drawings, and include a list of manufacturers, provide the specified or indicated product or a comparable product by one of the other named manufacturers. Drawings and Specifications indicate sizes, profiles, dimensions, and other characteristics that are based on the product named. Comply with requirements in "Comparable Products" Article for consideration of an unnamed product by one of the other named manufacturers.

2.2 COMPARABLE PRODUCTS

A. Conditions for Consideration: Architect will consider Contractor's request for comparable product , refer to Section 012500 Substitution Procedures.

PART 3 - EXECUTION (Not Used)

END OF SECTION 01 6000

SECTION 01 7300 - EXECUTION

PART 1 - GENERAL

1.1 RELATED DOCUMENTS

A. Drawings and general provisions of the Contract, including General and Supplementary Conditions and other Division 01 Specification Sections, apply to this Section.

1.2 SUMMARY

A. Section includes general administrative and procedural requirements governing execution of the Work including, but not limited to, the following:

1. Construction layout.
2. Field engineering and surveying.
3. Installation of the Work.
4. Coordination of Owner-installed products.
5. Progress cleaning.
6. Starting and adjusting.
7. Protection of installed construction.

1.3 DEFINITIONS

A. Cutting: Removal of in-place construction necessary to permit installation or performance of other work.

B. Patching: Fitting and repair work required to restore construction to original conditions after installation of other work.

1.4 INFORMATIONAL SUBMITTALS

A. Qualification Data: For land surveyor.

B. Certificates: Submit certificate signed by land surveyor certifying that location and elevation of improvements comply with requirements.

1.5 QUALITY ASSURANCE

A. Land Surveyor Qualifications: A professional land surveyor who is legally qualified to practice in jurisdiction where Project is located and who is experienced in providing land-surveying services of the kind indicated.

B. Manufacturer's Installation Instructions: Obtain and maintain on-site manufacturer's written recommendations and instructions for installation of products and equipment.

PART 2 - PRODUCTS

2.1 MATERIALS

A. General: Comply with requirements specified in other Sections.

1. For projects requiring compliance with sustainable design and construction practices and procedures, utilize products for patching that comply with requirements of Division 01 Section “Sustainable Design Requirements.”

B. In-Place Materials: Use materials for patching identical to in-place materials. For exposed surfaces, use materials that visually match in-place adjacent surfaces to the fullest extent possible.

1. If identical materials are unavailable or cannot be used, use materials that, when installed, will provide a match acceptable to the Architect for visual and functional performance of in-place materials.

PART 3 - EXECUTION

3.1 EXAMINATION

A. Examination and Acceptance of Conditions: Before proceeding with each component of the Work, examine substrates, areas, and conditions, with Installer or Applicator present where indicated, for compliance with requirements for installation tolerances and other conditions affecting performance. Record observations.

B. Existing Conditions: The existence and location of underground and other utilities and construction indicated as existing are not guaranteed. Before beginning sitework, investigate and verify the existence and location of underground utilities, mechanical and electrical systems, and other construction affecting the Work.

1. Before construction, verify the location and invert elevation at points of connection of sanitary sewer, storm sewer, and water-service piping; underground electrical services, and other utilities.

2. Furnish location data for work related to Project that must be performed by public utilities serving Project site.

3.2 PREPARATION

A. Existing Utility Information: Furnish information to local utility that is necessary to adjust, move, or relocate existing utility structures, utility poles, lines, services, or other utility appurtenances located in or affected by construction. Coordinate with authorities having jurisdiction.

B. Field Measurements: Take field measurements as required to fit the Work properly. Recheck measurements before installing each product. Where portions of the Work are indicated to fit to other construction, verify dimensions of other construction by field measurements before fabrication. Coordinate fabrication schedule with construction progress to avoid delaying the Work.

C. Space Requirements: Verify space requirements and dimensions of items shown diagrammatically on Drawings.

D. Review of Contract Documents and Field Conditions: Immediately on discovery of the need for clarification of the Contract Documents caused by differing field conditions outside the control of the Contractor, submit a request for information to Architect according to requirements in Division 01 Section "Project Management and Coordination."

E. Surface and Substrate Preparation: Comply with manufacturer's recommendations for preparation of substrates to receive subsequent work.

3.3 CONSTRUCTION LAYOUT

A. Verification: Before proceeding to lay out the Work, verify layout information shown on Drawings, in relation to the property survey and existing benchmarks. If discrepancies are discovered, notify Architect promptly.

B. General: Engage a land surveyor to lay out the Work using accepted surveying practices.

1. Establish benchmarks and control points to set lines and levels of construction and elsewhere as needed to locate each element of Project.
2. Establish dimensions within tolerances indicated. Do not scale Drawings to obtain required dimensions.
3. Inform installers of lines and levels to which they must comply.
4. Check the location, level and plumb, of every major element as the Work progresses.
5. Notify Architect when deviations from required lines and levels exceed allowable tolerances.
6. Close site surveys with an error of closure equal to or less than the standard established by authorities having jurisdiction.

C. Site Improvements: Locate and lay out site improvements, including pavements, grading, fill and topsoil placement, utility slopes, and rim and invert elevations.

D. Building Lines and Levels: Locate and lay out control lines and levels for structures, building foundations, column grids, and floor levels, including those required for mechanical and electrical work. Transfer survey markings and elevations for use with control lines and levels. Level foundations and piers from two or more locations.

E. Record Log: Maintain a log of layout control work. Record deviations from required lines and levels. Include beginning and ending dates and times of surveys, weather conditions, name and duty of each survey party member, and types of instruments and tapes used. Make the log available for reference by Architect.

3.4 FIELD ENGINEERING

A. Reference Points: Locate existing permanent benchmarks, control points, and similar reference points before beginning the Work. Preserve and protect permanent benchmarks and control points during construction operations.

1. Do not change or relocate existing benchmarks or control points without prior written approval of Architect. Report lost or destroyed permanent benchmarks or control points promptly. Report the need to relocate permanent benchmarks or control points to Architect before proceeding.
2. Replace lost or destroyed permanent benchmarks and control points promptly. Base replacements on the original survey control points.

B. Benchmarks: Establish and maintain a minimum of two permanent benchmarks on Project site, referenced to data established by survey control points. Comply with authorities having jurisdiction for type and size of benchmark.

1. Record benchmark locations, with horizontal and vertical data, on Project Record Documents.

2. Where the actual location or elevation of layout points cannot be marked, provide temporary reference points sufficient to locate the Work.
3. Remove temporary reference points when no longer needed. Restore marked construction to its original condition.

3.5 INSTALLATION

A. General: Locate the Work and components of the Work accurately, in correct alignment and elevation, as indicated.

1. Make vertical work plumb and make horizontal work level.
2. Where space is limited, install components to maximize space available for maintenance and ease of removal for replacement.
3. Conceal pipes, ducts, and wiring in finished areas, unless otherwise indicated.
4. Maintain minimum headroom clearance of 96 inches (2440 mm) in occupied spaces and 90 inches (2300 mm) in unoccupied spaces.

B. Comply with manufacturer's written instructions and recommendations for installing products in applications indicated.

C. Install products at the time and under conditions that will ensure the best possible results. Maintain conditions required for product performance until Final Completion.

D. Conduct construction operations so no part of the Work is subjected to damaging operations or loading in excess of that expected during normal conditions of occupancy.

E. Tools and Equipment: Do not use tools or equipment that produce harmful noise levels.

F. Templates: Obtain and distribute to the parties involved templates for work specified to be factory prepared and field installed. Check Shop Drawings of other work to confirm that adequate provisions are made for locating and installing products to comply with indicated requirements.

G. Attachment: Provide blocking and attachment plates and anchors and fasteners of adequate size and number to securely anchor each component in place, accurately located and aligned with other portions of the Work. Where size and type of attachments are not indicated, verify size and type required for load conditions.

1. Mounting Heights: Where mounting heights are not indicated, mount components at heights directed by Architect.
2. Allow for building movement, including thermal expansion and contraction.
3. Coordinate installation of anchorages. Furnish setting drawings, templates, and directions for installing anchorages, including sleeves, concrete inserts, anchor bolts, and items with integral anchors, that are to be embedded in concrete or masonry. Deliver such items to Project site in time for installation.

H. Joints: Make joints of uniform width. Where joint locations in exposed work are not indicated, arrange joints for the best visual effect. Fit exposed connections together to form hairline joints.

I. Hazardous Materials: Use products, cleaners, and installation materials that are not considered hazardous.

3.6 OWNER-INSTALLED PRODUCTS

A. Site Access: Provide access to Project site for Owner's construction personnel.

B. Coordination: Coordinate construction and operations of the Work with work performed by Owner's construction personnel.

1. Construction Schedule: Inform Owner of Contractor's preferred construction schedule for Owner's portion of the Work. Adjust construction schedule based on a mutually agreeable timetable. Notify Owner if changes to schedule are required due to differences in actual construction progress.

3.7 PROGRESS CLEANING

A. General: Clean Project site and work areas daily, including common areas. Enforce requirements strictly. Dispose of materials lawfully.

1. Comply with requirements in NFPA 241 for removal of combustible waste materials and debris.
2. Do not hold waste materials more than seven days during normal weather or three days if the temperature is expected to rise above 80 deg F (27 deg C).
3. Containerize hazardous and unsanitary waste materials separately from other waste. Mark containers appropriately and dispose of legally, according to regulations.

a. Utilize containers intended for holding waste materials of type to be stored.

4. Coordinate progress cleaning for joint-use areas where more than one installer has worked.

B. Site: Maintain Project site free of waste materials and debris at all times. Keep site mowed to a maximum height of 6” at all times.

C. Work Areas: Clean areas where work is in progress to the level of cleanliness necessary for proper execution of the Work.

1. Remove liquid spills promptly.
2. Where dust would impair proper execution of the Work, broom-clean or vacuum the entire work area, as appropriate.

D. Installed Work: Keep installed work clean. Clean installed surfaces according to written instructions of manufacturer or fabricator of product installed, using only cleaning materials specifically recommended. If specific cleaning materials are not recommended, use cleaning materials that are not hazardous to health or property and that will not damage exposed surfaces.

E. Concealed Spaces: Remove debris from concealed spaces before enclosing the space.

F. Exposed Surfaces in Finished Areas: Clean exposed surfaces and protect as necessary to ensure freedom from damage and deterioration at time of Substantial Completion.

G. Waste Disposal: Do not bury or burn waste materials on-site. Do not wash waste materials down sewers or into waterways.

H. During handling and installation, clean and protect construction in progress and adjoining materials already in place. Apply protective covering where required to ensure protection from damage or deterioration at Final Completion.

I. Clean and provide maintenance on completed construction as frequently as necessary through the remainder of the construction period. Adjust and lubricate operable components to ensure operability without damaging effects.

J. Limiting Exposures: Supervise construction operations to assure that no part of the construction, completed or in progress, is subject to harmful, dangerous, damaging, or otherwise deleterious exposure during the construction period.

3.8 STARTING AND ADJUSTING

A. Start equipment and operating components to confirm proper operation. Remove malfunctioning units, replace with new units, and retest.

B. Adjust equipment for proper operation. Adjust operating components for proper operation without binding.

C. Test each piece of equipment to verify proper operation. Test and adjust controls and safeties. Replace damaged and malfunctioning controls and equipment.

D. Manufacturer's Field Service: Comply with qualification requirements in Division 01 Section "Quality Requirements."

3.9 PROTECTION OF INSTALLED CONSTRUCTION

A. Provide final protection and maintain conditions that ensure installed Work is without damage or deterioration at time of Final Completion.

B. Comply with manufacturer's written instructions for temperature and relative humidity.

END OF SECTION 01 7300

Section 017419 Att A

CONTRACTOR'S CONSTRUCTION WASTE AND RECYCLING PLAN

(Submit After Award of Contract and Prior to Start of Work)

Project Title:		
Contract or Work Order No.:		
Contractor's Name:		
Street Address:		
City:	State:	Zip:
Phone: ( )	Fax: ( )	
E-Mail Address:		
Prepared by: (Print Name)		

Date Submitted:		
Project Period:	From:	TO:

Reuse, Recycling or Disposal Processes To Be Used

Describe the types of recycling processes or disposal activities that will be used for material generated in the project. Indicate the type of process or activity by number, types of materials, and estimated quantities that will be recycled or disposed in the sections below:

01 - Reuse of building materials or salvage items on site (i.e. crushed base or red clay brick)
02 - Salvaging building materials or salvage items at an off site salvage or re-use center (i.e. lighting, fixtures)
03 - Recycling source separated materials on site (i.e. crushing asphalt/concrete for reuse or grinding for mulch)
04 - Recycling source separated materials at an off site recycling center (i.e. scrap metal or green matls)
05 - Recycling commingled loads of C&D matls at an off site mixed debris recycling center or transfer station
06 - Recycling material as Alternative Daily Cover at landfills
07 - Delivery of soils or mixed inerts to an inert landfill for disposal (inert fill).
08 - Disposal at a landfill or transfer station.
09 - Other (please describe) _____

Types of Material To Be Generated

Use these codes to indicate the types of material that will be generated on the project

A = Asphalt	C = Concrete	M = Metals	I = Mixed Inert	G = Green Matls
D = Drywall	P/C=Paper/Cardboard	W/C = Wire/Cable	S= Soils (Non Hazardous)	
M/C = Miscellaneous Construction Debris		R = Reuse/Salvage	W = Wood	O = Other (describe)

Facilities Used: Provide Name of Facility and Location (City)

Total Truck Loads: Provide Number of Trucks Hauled from Site During Reporting Period

Total Quantities: If scales are available at sites, report in tons. If not, quantify by cubic yards. For salvage/reuse items, quantify by estimated weight (or units).

SECTION I - RE-USED/RECYCLED MATERIALS

Include all recycling activities for source separated or mixed material recycling centers where recycling will occur.

Type of Material	Type of Activity	Facility to be Used/Location	Total Truck Loads	Total Quantities Tons	Cubic YD	Other Wt.
(ex.) M	04	ABC Metals, Los Angeles	24	355		
a. Total Diversion			0	0	0	0

SECTION 017419 Att A

CONTRACTOR'S CONSTRUCTION WASTE AND RECYCLING PLAN

Continued

SECTION II - DISPOSED MATERIALS								
Include all disposal activities for landfills, transfer stations, or inert landfills where no recycling will occur.								
Type of Material	Type of Activity	Facility to be Used/Location			Total Truck Loads	Total Quantities		
						Tons	Cubic YD	Other Wt.
(ex.) D	08	DEF Landfill, Los Angeles			2	35		
b. Total Disposal						0	0	0

SECTION III - TOTAL MATERIALS GENERATED						
This section calculates the total materials to be generated during the project period (Reuse/Recycle + Disposal = Generation						
				Tons	Cubic YD	Other Wt.
a. Total Reused/Recycled				0	0	0
b. Total Disposed				0	0	0
c. Total Generated				0	0	0

SECTION IV - CONTRACTOR'S LANDFILL DIVERSION RATE CALCULATION					
Add totals from Section I + Section II					
	Tons	Cubic Yards	Other Wt.		
a. Materials Re-Used and Recycled	0				
b. Materials Disposed	0				
c. Total Materials Generated (a. + b. = c.)	0	0	0		
d. Landfill Diversion Rate (Tons Only)*	#DIV/0!				

** Use tons only to calculate recycling percentages: Tons Reused/Recycled/Tons Generated = % Recycled*

Contractor's Comments (Provide any additional information pertinent to planned reuse, recycling, or disposal activities):

Notes:

1. Section 01151A is a Division 01 General Requirement under CSI MasterFormat 1998 Edition.
   For CSI MasterFormat 2004 Edition, this Section may be renumbered as follows:
   Under Division 00, Procurement and Contracting Requirements, Project Forms 00 60 00
   Use: Section 00 62 22 Construction Waste Diversion Plan

2. Suggested Conversion Factors: From Cubic Yards to Tons (Use when scales are not available)
   Asphalt: .61 (ex. 1000 CY Asphalt = 610 tons. Applies to broken chunks of asphalt)
   Concrete: .93 (ex. 1000 CY Concrete = 930 tons. Applies to broken chunks of concrete)
   Ferrous Metals: .22 (ex. 1000 CY Ferrous Metal = 220 tons)
   Non-Ferrous Metals: .10 (ex. 1000 CY Non-Ferrous Metals = 100 tons)
   Drywall Scrap: .20
   Wood Scrap: .16

Section 017419 Att B

CONTRACTOR'S REUSE, RECYCLING, AND DISPOSAL REPORT

(Submit With Each Progress Payment)

Project Title:		
Contract or Work Order No.:		
Contractor's Name:		
Street Address:		
City:	State:	Zip:
Phone: ( )	Fax: ( )	
E-Mail Address:		
Prepared by: (Print Name)		

Date Submitted:		
Period Covered:	From:	To:

Reuse, Recycling or Disposal Processes Used

Describe the types of recycling processes or disposal activities used for material generated in the project. Indicate the type of process or activity by number, types of materials, and quantities that were recycled or disposed in the sections below:

01 - Reuse of building materials or salvage items on site (i.e. crushed base or red clay brick)
02 - Salvaging building materials or salvage items at an off site salvage or re-use center (i.e. lighting, fixtures)
03 - Recycling source separated materials on site (i.e. crushing asphalt/concrete for reuse or grinding for mulch)
04 - Recycling source separated materials at an off site recycling center (i.e. scrap metal or green matls)
05 - Recycling commingled loads of C&D matls at an off site mixed debris recycling center or transfer station
06 - Recycling material as Alternative Daily Cover at landfills
07 - Delivery of soils or mixed inerts to an inert landfill for disposal (inert fill).
08 - Disposal at a landfill or transfer station.
09 - Other (please describe) _____

Types of Material Generated

Use these codes to indicate the types of material that were generated on the project

A = Asphalt	C = Concrete	M = Metals	I = Mixed Inert	G = Green Matls
D = Drywall	P/C=Paper/Cardboard	W/C = Wire/Cable	S= Soils (Non Hazardous)	
M/C = Miscellaneous Construction Debris		R = Reuse/Salvage	W = Wood	O = Other (describe)

Facilities Used: Provide Name of Facility and Location (City)

Total Truck Loads: Provide Number of Trucks Hauled from Site During Reporting Period

Total Quantities: If scales are available at sites, report in tons. If not, quantify by cubic yards. For salvage/reuse items, quantify by estimated weight (or units).

SECTION I - RE-USED/RECYCLED MATERIALS

Include all recycling activities for source separated or mixed material recycling centers where recycling occurred.

Type of Material	Type of Activity	Facilities Used/Location	Total Truck Loads	Total Quantities Tons	Cubic YD	Other Wt.
(ex.) M	04	ABC Metals, Los Angeles	24	355		
a. Total Diversion			0	0	0	0

CONTRACTOR'S REUSE, RECYCLING, AND DISPOSAL REPORT

Continued

SECTION II - DISPOSED MATERIALS								
Include all disposal activities for landfills, transfer stations, or inert landfills where no recycling occurred.								
Type of Material	Type of Activity	Facilities Used/Location			Total Truck Loads	Total Quantities Tons	Cubic YD	Other Wt.
(ex.) D	08	DEF Landfill, Los Angeles			2	35		
b. Total Disposal						0	0	0

SECTION III - TOTAL MATERIALS GENERATED						
This section calculates the total materials generated during the project period (Reuse/Recycle + Disposal = Generation						
				Tons	Cubic YD	Other Wt.
a. Total Reused/Recycled				0	0	0
b. Total Disposed				0	0	0
c. Total Generated				0	0	0

SECTION IV - CONTRACTOR'S LANDFILL DIVERSION RATE CALCULATION					
Add totals from Section I + Section II					
	Tons	Cubic Yards	Other Wt.		
a. Materials Re-Used and Recycled	0				
b. Materials Disposed	0				
c. Total Materials Generated (a. + b. = c.)	0	0	0		
d. Landfill Diversion Rate (Tons Only)*	#DIV/0!				

** Use tons only to calculate recycling percentages: Tons Reused/Recycled/Tons Generated = % Recycled*

Contractor's Comments (*Provide any additional information pertinent to planned reuse, recycling, or disposal activities*):

Notes:

1. Section 01151A is a Division 01 General Requirement under CSI MasterFormat 1998 Edition.
   For CSI MasterFormat 2004 Edition, this Section may be renumbered as follows:
   Under Division 00, Procurement and Contracting Requirements, Project Forms 00 60 00
   Use: Section 00 62 22 Construction Waste Diversion Plan

2. Suggested Conversion Factors: From Cubic Yards to Tons (Use when scales are not available)
   Asphalt: .61 (ex. 1000 CY Asphalt = 610 tons. Applies to broken chunks of asphalt)
   Concrete: .93 (ex. 1000 CY Concrete = 930 tons. Applies to broken chunks of concrete)
   Ferrous Metals: .22 (ex. 1000 CY Ferrous Metal = 220 tons) Drywall Scrap: .20
   Non-Ferrous Metals: .10 (ex. 1000 CY Non-Ferrous Metals = 100 tons) Wood Scrap: .16

SECTION 01 7419 - CONSTRUCTION WASTE MANAGEMENT AND DISPOSAL

PART 1 - GENERAL

1.1 RELATED DOCUMENTS

A. Drawings and general provisions of the Contract, including General and Supplementary Conditions and other Division 01 Specification Sections, apply to this Section.

1.2 SUMMARY

A. Section includes administrative and procedural requirements for the following:

1. Salvaging nonhazardous demolition and construction waste.
2. Recycling nonhazardous demolition and construction waste.
3. Disposing of nonhazardous demolition and construction waste.

1.3 DEFINITIONS

A. Construction Waste: Building and site improvement materials and other solid waste resulting from construction, remodeling, renovation, or repair operations. Construction waste includes packaging.

B. Demolition Waste: Building and site improvement materials resulting from demolition or selective demolition operations.

C. Disposal: Removal off-site of demolition and construction waste and subsequent sale, recycling, reuse, or deposit in landfill or incinerator acceptable to authorities having jurisdiction.

D. Recycle: Recovery of demolition or construction waste for subsequent processing in preparation for reuse.

E. Salvage: Recovery of demolition or construction waste and subsequent sale or reuse in another facility.

F. Salvage and Reuse: Recovery of demolition or construction waste and subsequent incorporation into the Work.

1.4 PERFORMANCE REQUIREMENTS

A. General: Achieve end-of-Project rates for salvage/recycling of 75 percent by weight of total non-hazardous solid waste generated by the Work. Practice efficient waste management in the use of materials in the course of the Work. Use all reasonable means to divert construction and demolition waste from landfills and incinerators. Facilitate recycling and salvage of materials, including but not limited to the following:

1. Demolition Waste:

a. Concrete.
b. Concrete reinforcing steel.

c. Brick.
d. Concrete masonry units.
e. Wood studs.
f. Wood joists.
g. Plywood and oriented strand board.
h. Wood paneling.
i. Wood trim.
j. Structural and miscellaneous steel.
k. Rough hardware.
l. Roofing.
m. Insulation.
n. Doors and frames.
o. Door hardware.
p. Windows.
q. Glazing.
r. Metal studs.
s. Gypsum board.
t. Acoustical tile and panels.
u. Equipment.
v. Cabinets.
w. Plumbing fixtures.
x. Piping.
y. Supports and hangers.
z. Valves.
aa. Mechanical equipment.
bb. Refrigerants.
cc. Electrical conduit.
dd. Copper wiring.
ee. Lighting fixtures.
ff. Lamps.
gg. Ballasts.
hh. Electrical devices.
ii. Switchgear and panelboards.
jj. Transformers.

2. Construction Waste:

a. Masonry and CMU.
b. Lumber.
c. Wood sheet materials.
d. Wood trim.
e. Metals.
f. Roofing.
g. Insulation.
h. Gypsum board.
i. Piping.
j. Electrical conduit.
k. Packaging: Regardless of salvage/recycle goal indicated in "General" Paragraph above, salvage or recycle 100 percent of the following uncontaminated packaging materials:

1) Paper.
2) Cardboard.
3) Boxes.
4) Plastic sheet and film.
5) Polystyrene packaging.

6) Wood crates.
7) Plastic pails.

1.5 ACTION SUBMITTALS

A. Waste Management Plan: Submit Contractor's Construction Waste and Recycling Plan (Att. A) within 7 days of date established for commencement of the Work. Waste Management Plan to follow all applicable requirements for LEED.

1.6 INFORMATIONAL SUBMITTALS

A. Waste Reduction Progress Reports: Concurrent with each Application for Payment, submit report. Use Contractor's Reuse, Recycling, and Disposal Report (Att. B). The Plan must include, but is not limited to the following information:

1. Contractor's name and project identification information.
2. Generation point of waste.
3. Procedures to be used.
4. Names and locations of re-use and recycling facilities/sites.
5. Total quantity of waste in tons.
6. Quantity of waste salvaged, both estimated and actual in tons.
7. Quantity of waste recycled, both estimated and actual in tons.
8. Total quantity of waste recovered (salvaged plus recycled) in tons.
9. Total quantity of waste recovered (salvaged plus recycled) as a percentage of total waste.

B. Waste Reduction Calculations: Before request for Final Completion, submit calculated end-of-Project rates for salvage, recycling, and disposal as a percentage of total waste generated by the Work.

C. Records of Sales: Indicate receipt and acceptance of salvageable waste sold to individuals and organizations. Indicate whether organization is tax exempt.

D. Recycling and Processing Facility Records: Indicate receipt and acceptance of recyclable waste by recycling and processing facilities licensed to accept them. Include manifests, weight tickets, receipts, and invoices.

E. Landfill and Incinerator Disposal Records: Indicate receipt and acceptance of waste by landfills and incinerator facilities licensed to accept them. Include manifests, weight tickets, receipts, and invoices.

F. Qualification Data: For refrigerant recovery technician.

G. Statement of Refrigerant Recovery: Signed by refrigerant recovery technician responsible for recovering refrigerant, stating that all refrigerant that was present was recovered and that recovery was performed according to EPA regulations. Include name and address of technician and date refrigerant was recovered.

1.7 QUALITY ASSURANCE

A. Waste Management Coordinator Qualifications: Experienced firm, with a record of successful waste management coordination of projects with similar requirements, that employs a LEED-Accredited Professional, certified by the USGBC, as waste management coordinator.

B. Refrigerant Recovery Technician Qualifications: Certified by EPA-approved certification program.

C. Regulatory Requirements: Comply with hauling and disposal regulations of authorities having jurisdiction.

D. Waste Management Conference: Conduct conference at Project site to comply with requirements in Division 01 Section "Project Management and Coordination." Review methods and procedures related to waste management including, but not limited to, the following:

1. Review and discuss waste management plan including responsibilities of waste management coordinator.
2. Review requirements for documenting quantities of each type of waste and its disposition.
3. Review and finalize procedures for materials separation and verify availability of containers and bins needed to avoid delays.
4. Review procedures for periodic waste collection and transportation to recycling and disposal facilities.
5. Review waste management requirements for each trade.

1.8 WASTE MANAGEMENT PLAN

A. General: Develop a waste management plan according to ASTM E 1609 and requirements in this Section. Plan shall consist of waste identification, waste reduction work plan, and cost/revenue analysis. Indicate quantities by weight or volume, but use same units of measure throughout waste management plan.

B. Waste Identification: Indicate anticipated types and quantities of demolition and construction waste generated by the Work. Use Contractor’s Reuse, Recycling, and Disposal Report (Att. B). Include estimated quantities and assumptions for estimates.

C. Waste Reduction Work Plan: List each type of waste and whether it will be salvaged, recycled, or disposed of in landfill or incinerator. Use Contractor’s Construction waste and Recycling Plan. Include points of waste generation, total quantity of each type of waste, quantity for each means of recovery, and handling and transportation procedures.

1. Salvaged Materials for Reuse: For materials that will be salvaged and reused in this Project, describe methods for preparing salvaged materials before incorporation into the Work.
2. Salvaged Materials for Sale: For materials that will be sold to individuals and organizations, include list of their names, addresses, and telephone numbers.
3. Salvaged Materials for Donation: For materials that will be donated to individuals and organizations, include list of their names, addresses, and telephone numbers.
4. Recycled Materials: Include list of local receivers and processors and type of recycled materials each will accept. Include names, addresses, and telephone numbers.
5. Disposed Materials: Indicate how and where materials will be disposed of. Include name, address, and telephone number of each landfill and incinerator facility.
6. Handling and Transportation Procedures: Include method that will be used for separating recyclable waste including sizes of containers, container labeling, and designated location where materials separation will be performed.

D. Cost/Revenue Analysis: Indicate total cost of waste disposal as if there was no waste management plan and net additional cost or net savings resulting from implementing waste management plan. Include the following:

1. Total quantity of waste.
2. Estimated cost of disposal (cost per unit). Include hauling and tipping fees and cost of collection containers for each type of waste.
3. Total cost of disposal (with no waste management).
4. Revenue from salvaged materials.
5. Revenue from recycled materials.
6. Savings in hauling and tipping fees by donating materials.
7. Savings in hauling and tipping fees that are avoided.
8. Handling and transportation costs. Include cost of collection containers for each type of waste.
9. Net additional cost or net savings from waste management plan.

PART 2 - PRODUCTS (Not Used)

PART 3 - EXECUTION

3.1 PLAN IMPLEMENTATION

A. General: Implement approved waste management plan. Provide handling, containers, storage, signage, transportation, and other items as required to implement waste management plan during the entire duration of the Contract.

1. Comply with operation, termination, and removal requirements in Division 01 Section "Temporary Facilities and Controls."

B. Waste Management Coordinator: Engage a waste management coordinator to be responsible for implementing, monitoring, and reporting status of waste management work plan.

C. Training: Train workers, subcontractors, and suppliers on proper waste management procedures, as appropriate for the Work.

1. Distribute waste management plan to everyone concerned within three days of submittal return.
2. Distribute waste management plan to entities when they first begin work on-site. Review plan procedures and locations established for salvage, recycling, and disposal.

D. Site Access and Temporary Controls: Conduct waste management operations to ensure minimum interference with roads, streets, walks, walkways, and other adjacent occupied and used facilities.

1. Designate and label specific areas on Project site necessary for separating materials that are to be salvaged, recycled, reused, donated, and sold.
2. Comply with Division 01 Section "Temporary Facilities and Controls" for controlling dust and dirt, environmental protection, and noise control.

3.2 SALVAGING DEMOLITION WASTE

A. Salvaged Items for Reuse in the Work: Salvage items for reuse and handle as follows:

1. Clean salvaged items.
2. Pack or crate items after cleaning. Identify contents of containers with label indicating elements, date of removal, quantity, and location where removed.
3. Store items in a secure area until installation.
4. Protect items from damage during transport and storage.
5. Install salvaged items to comply with installation requirements for new materials and equipment. Provide connections, supports, and miscellaneous materials necessary to make items functional for use indicated.

B. Salvaged Items for Sale and Donation: Not permitted on Project site.

C. Salvaged Items for Owner's Use: Salvage items for Owner's use and handle as follows:

1. Clean salvaged items.
2. Pack or crate items after cleaning. Identify contents of containers with label indicating elements, date of removal, quantity, and location where removed.
3. Store items in a secure area until delivery to Owner.
4. Transport items to Owner's storage area designated by Owner.
5. Protect items from damage during transport and storage.

D. Doors and Hardware: Brace open end of door frames. Except for removing door closers, leave door hardware attached to doors.

E. Equipment: Drain tanks, piping, and fixtures. Seal openings with caps or plugs. Protect equipment from exposure to weather.

F. Plumbing Fixtures: Separate by type and size.

G. Lighting Fixtures: Separate lamps by type and protect from breakage.

H. Electrical Devices: Separate switches, receptacles, switchgear, transformers, meters, panelboards, circuit breakers, and other devices by type.

3.3 RECYCLING DEMOLITION AND CONSTRUCTION WASTE, GENERAL

A. General: Recycle paper and beverage containers used by on-site workers.

B. Recycling Incentives: Revenues, savings, rebates, tax credits, and other incentives received for recycling waste materials shall be represented in bid documents.

C. Preparation of Waste: Prepare and maintain recyclable waste materials according to recycling or reuse facility requirements. Maintain materials free of dirt, adhesives, solvents, petroleum contamination, and other substances deleterious to the recycling process.

D. Procedures: Separate recyclable waste from other waste materials, trash, and debris. Separate recyclable waste by type at Project site to the maximum extent practical according to approved construction waste management plan.

1. Provide appropriately marked containers or bins for controlling recyclable waste until removed from Project site. Include list of acceptable and unacceptable materials at each container and bin.

a. Inspect containers and bins for contamination and remove contaminated materials if found.

2. Stockpile processed materials on-site without intermixing with other materials. Place, grade, and shape stockpiles to drain surface water. Cover to prevent windblown dust.
3. Stockpile materials away from construction area. Do not store within drip line of remaining trees.
4. Store components off the ground and protect from the weather.
5. Remove recyclable waste from Owner's property and transport to recycling receiver or processor.

3.4 RECYCLING DEMOLITION WASTE

A. Asphalt Paving: Grind asphalt to maximum 4-inch (100-mm) size.

1. Crush asphaltic concrete paving and screen to comply with requirements in Division 31 Section "Earth Moving" for use as general fill.

B. Asphalt Paving: Break up and transport paving to asphalt-recycling facility.

C. Concrete: Remove reinforcement and other metals from concrete and sort with other metals.

1. Pulverize concrete to maximum 4-inch (100-mm) size.
2. Crush concrete and screen to comply with requirements in Division 31 Section "Earth Moving" for use as satisfactory soil for fill or subbase.

D. Masonry: Remove metal reinforcement, anchors, and ties from masonry and sort with other metals.

1. Pulverize masonry to maximum 4-inch (100-mm) size.

a. Crush masonry and screen to comply with requirements in Division 31 Section "Earth Moving" for use as general fill.
b. Crush masonry and screen to comply with requirements in Division 32 Section "Plants" for use as mineral mulch.

2. Clean and stack undamaged, whole masonry units on wood pallets.

E. Wood Materials: Sort and stack members according to size, type, and length. Separate lumber, engineered wood products, panel products, and treated wood materials.

F. Metals: Separate metals by type.

1. Structural Steel: Stack members according to size, type of member, and length.
2. Remove and dispose of bolts, nuts, washers, and other rough hardware.

G. Asphalt Shingle Roofing: Separate organic and glass-fiber asphalt shingles and felts. Remove and dispose of nails, staples, and accessories.

H. Gypsum Board: Stack large clean pieces on wood pallets or in container and store in a dry location. Remove edge trim and sort with other metals. Remove and dispose of fasteners.

I. Acoustical Ceiling Panels and Tile: Stack large clean pieces on wood pallets and store in a dry location.

J. Metal Suspension System: Separate metal members including trim, and other metals from acoustical panels and tile and sort with other metals.

K. Piping: Reduce piping to straight lengths and store by type and size. Separate supports, hangers, valves, sprinklers, and other components by type and size.

L. Conduit: Reduce conduit to straight lengths and store by type and size.

3.5 RECYCLING CONSTRUCTION WASTE

A. Packaging:

1. Cardboard and Boxes: Break down packaging into flat sheets. Bundle and store in a dry location.
2. Polystyrene Packaging: Separate and bag materials.
3. Pallets: As much as possible, require deliveries using pallets to remove pallets from Project site. For pallets that remain on-site, break down pallets into component wood pieces and comply with requirements for recycling wood.
4. Crates: Break down crates into component wood pieces and comply with requirements for recycling wood.

B. Wood Materials:

1. Clean Cut-Offs of Lumber: Grind or chip into small pieces.
2. Clean Sawdust: Bag sawdust that does not contain painted or treated wood.

C. Gypsum Board: Stack large clean pieces on wood pallets or in container and store in a dry location.

1. Clean Gypsum Board: Grind scraps of clean gypsum board using small mobile chipper or hammer mill. Screen out paper after grinding.

3.6 DISPOSAL OF WASTE

A. General: Except for items or materials to be salvaged, recycled, or otherwise reused, remove waste materials from Project site and legally dispose of them in a landfill or incinerator acceptable to authorities having jurisdiction.

1. Except as otherwise specified, do not allow waste materials that are to be disposed of accumulate on-site.
2. Remove and transport debris in a manner that will prevent spillage on adjacent surfaces and areas.

B. Burning: Do not burn waste materials.

C. Disposal: Remove waste materials and dispose of at designated spoil areas on Owner's property.

D. Disposal: Remove waste materials from Owner's property and legally dispose of them.

3.7 ATTACHMENTS

A. Form Section 017419 Att. A – Contractor's Construction Waste and Recycling Plan.

B. Form Section 017419 Att. B – Contractor's Reuse, Recycling, and Disposal Report.

END OF SECTION 01 7419

SECTION 01 7700 - CLOSEOUT PROCEDURES

PART 1 - GENERAL

1.1 RELATED DOCUMENTS

A. Drawings and general provisions of the Contract, including General and Supplementary Conditions and other Division 01 Specification Sections, apply to this Section.

1.2 SUMMARY

A. Section includes administrative and procedural requirements for contract closeout, including, but not limited to, the following:

1. Final completion procedures.
2. Warranties.
3. Final cleaning.

1.3 FINAL COMPLETION

A. Final Procedures: Before requesting inspection for determining date of Final Completion, complete the following. List items below that are incomplete with request.

1. Prepare a list of items to be completed and corrected (punch list), the value of items on the list, and reasons why the Work is not complete.
2. Submit specific warranties, workmanship bonds, maintenance service agreements, final certifications, and similar documents.
3. Obtain and submit releases permitting Owner unrestricted use of the Work and access to services and utilities. Include occupancy permits, operating certificates, and similar releases.
4. Prepare and submit Project Record Documents, operation and maintenance manuals, final completion construction photographic documentation, damage or settlement surveys, property surveys, and similar final record information.
5. Deliver tools, spare parts, extra materials, and similar items to location designated by Owner. Label with manufacturer's name and model number where applicable.
6. Complete startup testing of systems.
7. Submit test/adjust/balance records.
8. Terminate and remove temporary facilities from Project site, along with mockups, construction tools, and similar elements.
9. Advise Owner of changeover in heat and other utilities.
10. Submit changeover information related to Owner's occupancy, use, operation, and maintenance.
11. Complete final cleaning requirements, including touchup painting.
12. Touch up and otherwise repair and restore marred exposed finishes to eliminate visual defects.
13. Submit a final Application for Payment according to the General Conditions of the Contract.
14. Submit certified copy of Architect's Final Completion inspection list of items to be completed or corrected (punch list), endorsed and dated by Architect. The certified copy of the list shall state that each item has been completed or otherwise resolved for acceptance.
15. Instruct Owner's personnel in operation, adjustment, and maintenance of products, equipment, and systems.

16. Submit completed Final Commissioning Report.

1.4 LIST OF INCOMPLETE ITEMS (PUNCH LIST) BY CONTRACTOR

A. Organization of List: Include name and identification of each space and area affected by construction operations for incomplete items and items needing correction including, if necessary, areas disturbed by Contractor that are outside the limits of construction. Use CSI Form 14.1A.

1. Organize list of spaces in sequential order, starting with exterior areas first.
2. Organize items applying to each space by major element, including categories for ceiling, individual walls, floors, equipment, and building systems.
3. Include the following information at the top of each page:

a. Project name.
b. Date.
c. Name of Contractor.
d. Page number.

4. Submit list of incomplete items in the following format:

a. PDF electronic file.

1.5 WARRANTIES

A. Submittal Time: Submit written warranties on request of Architect for designated portions of the Work where commencement of warranties other than date of Final Completion is indicated.

B. Partial Occupancy: Submit properly executed warranties within 15 days of completion of designated portions of the Work that are completed and occupied or used by Owner during construction period by separate agreement with Contractor.

C. Organize warranty documents into an orderly sequence based on the table of contents of the Project Manual.

1. Bind warranties and bonds in heavy-duty, three-ring, vinyl-covered, loose-leaf binders, thickness as necessary to accommodate contents, and sized to receive 8-1/2-by-11-inch (215-by-280-mm) paper.
2. Provide heavy paper dividers with plastic-covered tabs for each separate warranty. Mark tab to identify the product or installation. Provide a typed description of the product or installation, including the name of the product and the name, address, and telephone number of Installer.
3. Identify each binder on the front and spine with the typed or printed title "WARRANTIES," Project name, and name of Contractor.
4. Scan warranties and bonds and assemble complete warranty and bond submittal package into a single indexed electronic PDF file with links enabling navigation to each item. Provide table of contents at beginning of document.

D. Provide additional copies of each warranty to include in operation and maintenance manuals.

PART 2 - PRODUCTS

2.1 MATERIALS

A. Cleaning Agents: Use cleaning materials and agents recommended by manufacturer or fabricator of the surface to be cleaned. Do not use cleaning agents that are potentially hazardous to health or property or that might damage finished surfaces.

1. Use cleaning products that meet Green Seal GS-37, or if GS-37 is not applicable, use products that comply with the California Code of Regulations maximum allowable VOC levels.

PART 3 - EXECUTION

3.1 FINAL CLEANING

A. General: Perform final cleaning. Conduct cleaning and waste-removal operations to comply with local laws and ordinances and Federal and local environmental and antipollution regulations.

B. Cleaning: Employ experienced workers or professional cleaners for final cleaning. Clean each surface or unit to condition expected in an average commercial building cleaning and maintenance program. Comply with manufacturer's written instructions.

1. Complete the following cleaning operations before requesting inspection for certification of Final Completion for entire Project or for a portion of Project:

a. Clean Project site, yard, and grounds, in areas disturbed by construction activities, including landscape development areas, of rubbish, waste material, litter, and other foreign substances.
b. Sweep paved areas broom clean. Remove petrochemical spills, stains, and other foreign deposits.
c. Rake grounds that are neither planted nor paved to a smooth, even-textured surface.
d. Remove tools, construction equipment, machinery, and surplus material from Project site.
e. Remove snow and ice to provide safe access to building.
f. Clean exposed exterior and interior hard-surfaced finishes to a dirt-free condition, free of stains, films, and similar foreign substances. Avoid disturbing natural weathering of exterior surfaces. Restore reflective surfaces to their original condition.
g. Remove debris and surface dust from limited access spaces, including roofs, plenums, shafts, trenches, equipment vaults, manholes, attics, and similar spaces.
h. Sweep concrete floors broom clean in unoccupied spaces.
i. Vacuum carpet and similar soft surfaces, removing debris and excess nap; shampoo if visible soil or stains remain.
j. Clean transparent materials, including mirrors and glass in doors and windows. Remove glazing compounds and other noticeable, vision-obscuring materials. Replace chipped or broken glass and other damaged transparent materials. Polish mirrors and glass, taking care not to scratch surfaces.
k. Remove labels that are not permanent.
l. Touch up and otherwise repair and restore marred, exposed finishes and surfaces. Replace finishes and surfaces that cannot be satisfactorily repaired or restored or that already show evidence of repair or restoration.

1) Do not paint over "UL" and other required labels and identification, including mechanical and electrical nameplates.

m. Wipe surfaces of mechanical and electrical equipment and similar equipment. Remove excess lubrication, paint and mortar droppings, and other foreign substances.
n. Replace parts subject to operating conditions during construction that may impede operation or reduce longevity.
o. Clean plumbing fixtures to a sanitary condition, free of stains, including stains resulting from water exposure.
p. Replace disposable air filters and clean permanent air filters. Clean exposed surfaces of diffusers, registers, and grills.
q. Clean ducts, blowers, and coils if units were operated without filters during construction or that display contamination with particulate matter upon inspection.

1) Clean HVAC system in compliance with NADCA Standard 2005 edition. Provide written report upon completion of cleaning.

r. Clean light fixtures, lamps, globes, and reflectors to function with full efficiency. Replace burned-out bulbs, and those noticeably dimmed by hours of use, and defective and noisy starters in fluorescent and mercury vapor fixtures to comply with requirements for new fixtures.
s. Leave Project clean and ready for occupancy.

END OF SECTION 01 7700

SECTION 01 7823 - OPERATION AND MAINTENANCE DATA

PART 1 - GENERAL

1.1 RELATED DOCUMENTS

A. Drawings and general provisions of the Contract, including General and Supplementary Conditions and other Division 01 Specification Sections, apply to this Section.

1.2 SUMMARY

A. Section includes administrative and procedural requirements for preparing operation and maintenance manuals, including the following:

1. Operation and maintenance documentation directory.
2. Emergency manuals.
3. Operation manuals for systems, subsystems, and equipment.
4. Product maintenance manuals.
5. Systems and equipment maintenance manuals.

B. Related Requirements:

1. Section 013300 "Submittal Procedures" for submitting copies of submittals for operation and maintenance manuals.
2. Section 019113 "General Commissioning Requirements" for verification and compilation of data into operation and maintenance manuals.

1.3 DEFINITIONS

A. System: An organized collection of parts, equipment, or subsystems united by regular interaction.

B. Subsystem: A portion of a system with characteristics similar to a system.

1.4 CLOSEOUT SUBMITTALS

A. Manual Content: Operations and maintenance manual content is specified in individual Specification Sections to be reviewed at the time of Section submittals. Submit reviewed manual content formatted and organized as required by this Section.

1. Architect and Commissioning Authority will comment on whether content of operations and maintenance submittals are acceptable.
2. Where applicable, clarify and update reviewed manual content to correspond to revisions and field conditions.

B. Format: Submit operations and maintenance manuals in the following format:

1. PDF electronic file. Assemble each manual into a composite electronically indexed file. Submit on digital media acceptable to Architect.

    a. Name each indexed document file in composite electronic index with applicable item name. Include a complete electronically linked operation and maintenance directory.
    b. Enable inserted reviewer comments on draft submittals.

2. Three paper copies. Include a complete operation and maintenance directory. Enclose title pages and directories in clear plastic sleeves. Architect will return two copies.

C. Initial Manual Submittal: Submit draft copy of each manual at least 30 days before commencing demonstration and training. Architect and Commissioning Authority will comment on whether general scope and content of manual are acceptable.

D. Final Manual Submittal: Submit each manual in final form prior to requesting inspection for Substantial Completion and at least 15 days before commencing demonstration and training. Architect and Commissioning Authority will return copy with comments.

1. Correct or revise each manual to comply with Architect's and Commissioning Authority's comments. Submit copies of each corrected manual within 15 days of receipt of Architect's and Commissioning Authority's comments and prior to commencing demonstration and training.

PART 2 - PRODUCTS

2.1 OPERATION AND MAINTENANCE DOCUMENTATION DIRECTORY

A. Directory: Prepare a single, comprehensive directory of emergency, operation, and maintenance data and materials, listing items and their location to facilitate ready access to desired information. Include a section in the directory for each of the following:

1. List of documents.
2. List of systems.
3. List of equipment.
4. Table of contents.

B. List of Systems and Subsystems: List systems alphabetically. Include references to operation and maintenance manuals that contain information about each system.

C. List of Equipment: List equipment for each system, organized alphabetically by system. For pieces of equipment not part of system, list alphabetically in separate list.

D. Tables of Contents: Include a table of contents for each emergency, operation, and maintenance manual.

E. Identification: In the documentation directory and in each operation and maintenance manual, identify each system, subsystem, and piece of equipment with same designation used in the Contract Documents. If no designation exists, assign a designation according to ASHRAE Guideline 4, "Preparation of Operating and Maintenance Documentation for Building Systems."

2.2 REQUIREMENTS FOR EMERGENCY, OPERATION, AND MAINTENANCE MANUALS

A. Organization: Unless otherwise indicated, organize each manual into a separate section for each system and subsystem, and a separate section for each piece of equipment not part of a system. Each manual shall contain the following materials, in the order listed:

1. Title page.
2. Table of contents.
3. Manual contents.

B. Title Page: Include the following information:

1. Subject matter included in manual.
2. Name and address of Project.
3. Name and address of Owner.
4. Date of submittal.
5. Name and contact information for Contractor.
6. Name and contact information for Construction Manager.
7. Name and contact information for Architect.
8. Name and contact information for Commissioning Authority.
9. Names and contact information for major consultants to the Architect that designed the systems contained in the manuals.
10. Cross-reference to related systems in other operation and maintenance manuals.

C. Table of Contents: List each product included in manual, identified by product name, indexed to the content of the volume, and cross-referenced to Specification Section number in Project Manual.

1. If operation or maintenance documentation requires more than one volume to accommodate data, include comprehensive table of contents for all volumes in each volume of the set.

D. Manual Contents: Organize into sets of manageable size. Arrange contents alphabetically by system, subsystem, and equipment. If possible, assemble instructions for subsystems, equipment, and components of one system into a single binder.

E. Manuals, Electronic Files: Submit manuals in the form of a multiple file composite electronic PDF file for each manual type required.

1. Electronic Files: Use electronic files prepared by manufacturer where available. Where scanning of paper documents is required, configure scanned file for minimum readable file size.
2. File Names and Bookmarks: Enable bookmarking of individual documents based on file names. Name document files to correspond to system, subsystem, and equipment names used in manual directory and table of contents. Group documents for each system and subsystem into individual composite bookmarked files, then create composite manual, so that resulting bookmarks reflect the system, subsystem, and equipment names in a readily navigated file tree. Configure electronic manual to display bookmark panel on opening file.

F. Manuals, Paper Copy: Submit manuals in the form of hard copy, bound and labeled volumes.

1. Binders: Heavy-duty, three-ring, vinyl-covered, loose-leaf binders, in thickness necessary to accommodate contents, sized to hold 8-1/2-by-11-inch (215-by-280-mm)

paper; with clear plastic sleeve on spine to hold label describing contents and with pockets inside covers to hold folded oversize sheets.

a. If two or more binders are necessary to accommodate data of a system, organize data in each binder into groupings by subsystem and related components. Cross-reference other binders if necessary to provide essential information for proper operation or maintenance of equipment or system.
b. Identify each binder on front and spine, with printed title "OPERATION AND MAINTENANCE MANUAL," Project title or name, and subject matter of contents, and indicate Specification Section number on bottom of spine. Indicate volume number for multiple-volume sets.

2. Dividers: Heavy-paper dividers with plastic-covered tabs for each section of the manual. Mark each tab to indicate contents. Include typed list of products and major components of equipment included in the section on each divider, cross-referenced to Specification Section number and title of Project Manual.
3. Protective Plastic Sleeves: Transparent plastic sleeves designed to enclose diagnostic software storage media for computerized electronic equipment.
4. Supplementary Text: Prepared on 8-1/2-by-11-inch (215-by-280-mm) white bond paper.
5. Drawings: Attach reinforced, punched binder tabs on drawings and bind with text.

a. If oversize drawings are necessary, fold drawings to same size as text pages and use as foldouts.
b. If drawings are too large to be used as foldouts, fold and place drawings in labeled envelopes and bind envelopes in rear of manual. At appropriate locations in manual, insert typewritten pages indicating drawing titles, descriptions of contents, and drawing locations.

2.3 EMERGENCY MANUALS

A. Content: Organize manual into a separate section for each of the following:

1. Type of emergency.
2. Emergency instructions.
3. Emergency procedures.

B. Type of Emergency: Where applicable for each type of emergency indicated below, include instructions and procedures for each system, subsystem, piece of equipment, and component:

1. Fire.
2. Flood.
3. Gas leak.
4. Water leak.
5. Power failure.
6. Water outage.
7. System, subsystem, or equipment failure.
8. Chemical release or spill.

C. Emergency Instructions: Describe and explain warnings, trouble indications, error messages, and similar codes and signals. Include responsibilities of Owner's operating personnel for notification of Installer, supplier, and manufacturer to maintain warranties.

D. Emergency Procedures: Include the following, as applicable:

1. Instructions on stopping.
2. Shutdown instructions for each type of emergency.
3. Operating instructions for conditions outside normal operating limits.
4. Required sequences for electric or electronic systems.
5. Special operating instructions and procedures.

2.4 OPERATION MANUALS

A. Content: In addition to requirements in this Section, include operation data required in individual Specification Sections and the following information:

1. System, subsystem, and equipment descriptions. Use designations for systems and equipment indicated on Contract Documents.
2. Performance and design criteria if Contractor has delegated design responsibility.
3. Operating standards.
4. Operating procedures.
5. Operating logs.
6. Wiring diagrams.
7. Control diagrams.
8. Piped system diagrams.
9. Precautions against improper use.
10. License requirements including inspection and renewal dates.

B. Descriptions: Include the following:

1. Product name and model number. Use designations for products indicated on Contract Documents.
2. Manufacturer's name.
3. Equipment identification with serial number of each component.
4. Equipment function.
5. Operating characteristics.
6. Limiting conditions.
7. Performance curves.
8. Engineering data and tests.
9. Complete nomenclature and number of replacement parts.

C. Operating Procedures: Include the following, as applicable:

1. Startup procedures.
2. Equipment or system break-in procedures.
3. Routine and normal operating instructions.
4. Regulation and control procedures.
5. Instructions on stopping.
6. Normal shutdown instructions.
7. Seasonal and weekend operating instructions.
8. Required sequences for electric or electronic systems.
9. Special operating instructions and procedures.

D. Systems and Equipment Controls: Describe the sequence of operation, and diagram controls as installed.

E. Piped Systems: Diagram piping as installed, and identify color-coding where required for identification.

2.5 PRODUCT MAINTENANCE MANUALS

A. Content: Organize manual into a separate section for each product, material, and finish. Include source information, product information, maintenance procedures, repair materials and sources, and warranties and bonds, as described below.

B. Source Information: List each product included in manual, identified by product name and arranged to match manual's table of contents. For each product, list name, address, and telephone number of Installer or supplier and maintenance service agent, and cross-reference Specification Section number and title in Project Manual and drawing or schedule designation or identifier where applicable.

C. Product Information: Include the following, as applicable:

1. Product name and model number.
2. Manufacturer's name.
3. Color, pattern, and texture.
4. Material and chemical composition.
5. Reordering information for specially manufactured products.

D. Maintenance Procedures: Include manufacturer's written recommendations and the following:

1. Inspection procedures.
2. Types of cleaning agents to be used and methods of cleaning.
3. List of cleaning agents and methods of cleaning detrimental to product.
4. Schedule for routine cleaning and maintenance.
5. Repair instructions.

E. Repair Materials and Sources: Include lists of materials and local sources of materials and related services.

F. Warranties and Bonds: Include copies of warranties and bonds and lists of circumstances and conditions that would affect validity of warranties or bonds.

1. Include procedures to follow and required notifications for warranty claims.

2.6 SYSTEMS AND EQUIPMENT MAINTENANCE MANUALS

A. Content: For each system, subsystem, and piece of equipment not part of a system, include source information, manufacturers' maintenance documentation, maintenance procedures, maintenance and service schedules, spare parts list and source information, maintenance service contracts, and warranty and bond information, as described below.

B. Source Information: List each system, subsystem, and piece of equipment included in manual, identified by product name and arranged to match manual's table of contents. For each product, list name, address, and telephone number of Installer or supplier and maintenance service agent, and cross-reference Specification Section number and title in Project Manual and drawing or schedule designation or identifier where applicable.

C. Manufacturers' Maintenance Documentation: Manufacturers' maintenance documentation including the following information for each component part or piece of equipment:

1. Standard maintenance instructions and bulletins.

2. Drawings, diagrams, and instructions required for maintenance, including disassembly and component removal, replacement, and assembly.
3. Identification and nomenclature of parts and components.
4. List of items recommended to be stocked as spare parts.

D. Maintenance Procedures: Include the following information and items that detail essential maintenance procedures:

1. Test and inspection instructions.
2. Troubleshooting guide.
3. Precautions against improper maintenance.
4. Disassembly; component removal, repair, and replacement; and reassembly instructions.
5. Aligning, adjusting, and checking instructions.
6. Demonstration and training video recording, if available.

E. Maintenance and Service Schedules: Include service and lubrication requirements, list of required lubricants for equipment, and separate schedules for preventive and routine maintenance and service with standard time allotment.

1. Scheduled Maintenance and Service: Tabulate actions for daily, weekly, monthly, quarterly, semiannual, and annual frequencies.
2. Maintenance and Service Record: Include manufacturers' forms for recording maintenance.

F. Spare Parts List and Source Information: Include lists of replacement and repair parts, with parts identified and cross-referenced to manufacturers' maintenance documentation and local sources of maintenance materials and related services.

G. Maintenance Service Contracts: Include copies of maintenance agreements with name and telephone number of service agent.

H. Warranties and Bonds: Include copies of warranties and bonds and lists of circumstances and conditions that would affect validity of warranties or bonds.

1. Include procedures to follow and required notifications for warranty claims.

PART 3 - EXECUTION

3.1 MANUAL PREPARATION

A. Operation and Maintenance Documentation Directory: Prepare a separate manual that provides an organized reference to emergency, operation, and maintenance manuals.

B. Emergency Manual: Assemble a complete set of emergency information indicating procedures for use by emergency personnel and by Owner's operating personnel for types of emergencies indicated.

C. Product Maintenance Manual: Assemble a complete set of maintenance data indicating care and maintenance of each product, material, and finish incorporated into the Work.

D. Operation and Maintenance Manuals: Assemble a complete set of operation and maintenance data indicating operation and maintenance of each system, subsystem, and piece of equipment not part of a system.

1. Engage a factory-authorized service representative to assemble and prepare information for each system, subsystem, and piece of equipment not part of a system.
2. Prepare a separate manual for each system and subsystem, in the form of an instructional manual for use by Owner's operating personnel.

E. Manufacturers' Data: Where manuals contain manufacturers' standard printed data, include only sheets pertinent to product or component installed. Mark each sheet to identify each product or component incorporated into the Work. If data include more than one item in a tabular format, identify each item using appropriate references from the Contract Documents. Identify data applicable to the Work and delete references to information not applicable.

1. Prepare supplementary text if manufacturers' standard printed data are not available and where the information is necessary for proper operation and maintenance of equipment or systems.

F. Drawings: Prepare drawings supplementing manufacturers' printed data to illustrate the relationship of component parts of equipment and systems and to illustrate control sequence and flow diagrams. Coordinate these drawings with information contained in record Drawings to ensure correct illustration of completed installation.

1. Do not use original project record documents as part of operation and maintenance manuals.
2. Comply with requirements of newly prepared record Drawings in Section 017839 "Project Record Documents."

G. Comply with Section 017700 "Closeout Procedures" for schedule for submitting operation and maintenance documentation.

END OF SECTION 01 7823

SECTION 01 7839 - PROJECT RECORD DOCUMENTS

PART 1 - GENERAL

1.1 RELATED DOCUMENTS

A. Drawings and general provisions of the Contract, including General and Supplementary Conditions and other Division 01 Specification Sections, apply to this Section.

1.2 SUMMARY

A. Section includes administrative and procedural requirements for project record documents, including the following:

1. Record Drawings.
2. Record Specifications.
3. Record Product Data.

1.3 CLOSEOUT SUBMITTALS

A. Record Drawings: Comply with the following:

1. Number of Copies: Submit one set(s) of marked-up record prints.

B. Record Specifications: Submit one paper copy of Project's Specifications, including addenda and contract modifications.

C. Record Product Data: Submit one paper copy of each submittal.

1. Where record Product Data are required as part of operation and maintenance manuals, submit duplicate marked-up Product Data as a component of manual.

PART 2 - PRODUCTS

2.1 RECORD DRAWINGS

A. Record Prints: Maintain one set of marked-up paper copies of the Contract Drawings and Shop Drawings.

1. Preparation: Mark record prints to show the actual installation where installation varies from that shown originally. Require individual or entity who obtained record data, whether individual or entity is Installer, subcontractor, or similar entity, to provide information for preparation of corresponding marked-up record prints.

a. Give particular attention to information on concealed elements that would be difficult to identify or measure and record later.
b. Accurately record information in an acceptable drawing technique.
c. Record data as soon as possible after obtaining it.
d. Record and check the markup before enclosing concealed installations.
e. Cross-reference record prints to corresponding archive photographic documentation.

2. Content: Types of items requiring marking include, but are not limited to, the following:

    a. Dimensional changes to Drawings.
    b. Revisions to details shown on Drawings.
    c. Depths of foundations below first floor.
    d. Locations and depths of underground utilities.
    e. Revisions to routing of piping and conduits.
    f. Revisions to electrical circuitry.
    g. Actual equipment locations.
    h. Duct size and routing.
    i. Locations of concealed internal utilities.
    j. Changes made following Architect's written orders.
    k. Details not on the original Contract Drawings.
    l. Field records for variable and concealed conditions.
    m. Record information on the Work that is shown only schematically.

3. Mark the Contract Drawings and Shop Drawings completely and accurately. Utilize personnel proficient at recording graphic information in production of marked-up record prints.
4. Mark record sets with erasable, red-colored pencil. Use other colors to distinguish between changes for different categories of the Work at same location.
5. Mark important additional information that was either shown schematically or omitted from original Drawings.
6. Note Construction Change Directive numbers, alternate numbers, Change Order numbers, and similar identification, where applicable.

B. Format: Identify and date each record Drawing; include the designation "PROJECT RECORD DRAWING" in a prominent location.

1. Record Prints: Organize record prints and newly prepared record Drawings into manageable sets. Bind each set with durable paper cover sheets. Include identification on cover sheets.
2. Identification: As follows:

    a. Project name.
    b. Date.
    c. Designation "PROJECT RECORD DRAWINGS."
    d. Name of Architect.
    e. Name of Contractor.

2.2 RECORD SPECIFICATIONS

A. Preparation: Mark Specifications to indicate the actual product installation where installation varies from that indicated in Specifications, addenda, and contract modifications.

1. Give particular attention to information on concealed products and installations that cannot be readily identified and recorded later.
2. Mark copy with the proprietary name and model number of products, materials, and equipment furnished, including substitutions and product options selected.
3. Record the name of manufacturer, supplier, Installer, and other information necessary to provide a record of selections made.
4. For each principal product, indicate whether record Product Data has been submitted in operation and maintenance manuals instead of submitted as record Product Data.
5. Note related Change Orders, record Product Data, and record Drawings where applicable.

B. Format: Submit record Specifications as paper copy.

2.3 RECORD PRODUCT DATA

A. Preparation: Mark Product Data to indicate the actual product installation where installation varies substantially from that indicated in Product Data submittal.

1. Give particular attention to information on concealed products and installations that cannot be readily identified and recorded later.
2. Include significant changes in the product delivered to Project site and changes in manufacturer's written instructions for installation.
3. Note related Change Orders, record Specifications, and record Drawings where applicable.

B. Format: Submit record Product Data as paper copy.

1. Include record Product Data directory organized by specification section number and title, electronically linked to each item of record Product Data.

PART 3 - EXECUTION

3.1 RECORDING AND MAINTENANCE

A. Recording: Maintain one copy of each submittal during the construction period for project record document purposes. Post changes and modifications to project record documents as they occur; do not wait until the end of Project.

B. Maintenance of Record Documents and Samples: Store record documents and Samples in the field office apart from the Contract Documents used for construction. Do not use project record documents for construction purposes. Maintain record documents in good order and in a clean, dry, legible condition, protected from deterioration and loss. Provide access to project record documents for Architect's reference during normal working hours.

END OF SECTION 01 7839

SECTION 01 7900 - DEMONSTRATION AND TRAINING

PART 1 - GENERAL

1.1 RELATED DOCUMENTS

A. Drawings and general provisions of the Contract, including General and Supplementary Conditions and other Division 01 Specification Sections, apply to this Section.

1.2 SUMMARY

A. Section includes administrative and procedural requirements for instructing Owner's personnel, including the following:

1. Demonstration of operation of systems, subsystems, and equipment.
2. Training in operation and maintenance of systems, subsystems, and equipment.

1.3 INFORMATIONAL SUBMITTALS

A. Instruction Program: Submit outline of instructional program for demonstration and training, including a list of training modules and a schedule of proposed dates, times, length of instruction time, and instructors' names for each training module. Include learning objective and outline for each training module.

1. Indicate proposed training modules utilizing manufacturer-produced demonstration and training video recordings for systems, equipment, and products in lieu of video recording of live instructional module.

2. Attendance Record: For each training module, submit list of participants and length of instruction time.

1.4 QUALITY ASSURANCE

A. Facilitator Qualifications: A firm or individual experienced in training or educating maintenance personnel in a training program similar in content and extent to that indicated for this Project, and whose work has resulted in training or education with a record of successful learning performance.

B. Instructor Qualifications: A factory-authorized service representative, complying with requirements in Division 01 Section "Quality Requirements," experienced in operation and maintenance procedures and training.

1.5 COORDINATION

A. Coordinate instruction schedule with Owner's operations. Adjust schedule as required to minimize disrupting Owner's operations.

B. Coordinate instructors, including providing notification of dates, times, length of instruction time, and course content.

C. Coordinate content of training modules with content of approved emergency, operation, and maintenance manuals. Do not submit instruction program until operation and maintenance data has been reviewed and approved by Architect.

PART 2 - PRODUCTS

2.1 INSTRUCTION PROGRAM

A. Program Structure: Develop an instruction program that includes individual training modules for each system and for equipment not part of a system, as required by individual Specification Sections.

B. Training Modules: Develop a learning objective and teaching outline for each module. Include a description of specific skills and knowledge that participant is expected to master. For each module, include instruction for the following as applicable to the system, equipment, or component:

1. Basis of System Design, Operational Requirements, and Criteria: Include the following:

a. System, subsystem, and equipment descriptions.
b. Performance and design criteria if Contractor is delegated design responsibility.
c. Operating standards.
d. Regulatory requirements.
e. Equipment function.
f. Operating characteristics.
g. Limiting conditions.
h. Performance curves.

2. Documentation: Review the following items in detail:

a. Emergency manuals.
b. Operations manuals.
c. Maintenance manuals.
d. Project record documents.
e. Identification systems.
f. Warranties and bonds.
g. Maintenance service agreements and similar continuing commitments.

3. Emergencies: Include the following, as applicable:

a. Instructions on meaning of warnings, trouble indications, and error messages.
b. Instructions on stopping.
c. Shutdown instructions for each type of emergency.
d. Operating instructions for conditions outside of normal operating limits.
e. Sequences for electric or electronic systems.
f. Special operating instructions and procedures.

4. Operations: Include the following, as applicable:

a. Startup procedures.
b. Equipment or system break-in procedures.
c. Routine and normal operating instructions.
d. Regulation and control procedures.
e. Control sequences.
f. Safety procedures.
g. Instructions on stopping.

h. Normal shutdown instructions.
i. Operating procedures for emergencies.
j. Operating procedures for system, subsystem, or equipment failure.
k. Seasonal and weekend operating instructions.
l. Required sequences for electric or electronic systems.
m. Special operating instructions and procedures.

5. Adjustments: Include the following:

a. Alignments.
b. Checking adjustments.
c. Noise and vibration adjustments.
d. Economy and efficiency adjustments.

6. Troubleshooting: Include the following:

a. Diagnostic instructions.
b. Test and inspection procedures.

7. Maintenance: Include the following:

a. Inspection procedures.
b. Types of cleaning agents to be used and methods of cleaning.
c. List of cleaning agents and methods of cleaning detrimental to product.
d. Procedures for routine cleaning
e. Procedures for preventive maintenance.
f. Procedures for routine maintenance.
g. Instruction on use of special tools.

8. Repairs: Include the following:

a. Diagnosis instructions.
b. Repair instructions.
c. Disassembly; component removal, repair, and replacement; and reassembly instructions.
d. Instructions for identifying parts and components.
e. Review of spare parts needed for operation and maintenance.

PART 3 - EXECUTION

3.1 PREPARATION

A. Assemble educational materials necessary for instruction, including documentation and training module. Assemble training modules into a training manual organized in coordination with requirements in Division 01 Section "Operations and Maintenance Data."

B. Set up instructional equipment at instruction location.

3.2 INSTRUCTION

A. Facilitator: Engage a qualified facilitator to prepare instruction program and training modules, to coordinate instructors, and to coordinate between Contractor and Owner for number of participants, instruction times, and location.

B. Engage qualified instructors to instruct Owner's personnel to adjust, operate, and maintain systems, subsystems, and equipment not part of a system.

1. Architect will furnish an instructor to describe basis of system design, operational requirements, criteria, and regulatory requirements.
2. Owner will furnish Contractor with names and positions of participants.

C. Scheduling: Provide instruction at mutually agreed on times. For equipment that requires seasonal operation, provide similar instruction at start of each season.

1. Schedule training with Owner with at least seven days' advance notice.

D. Demonstration and Training Video: Contractor shall record each on-site training session separately. Include classroom instructions and demonstrations, board diagrams, and other visual aids, but not student practice.

1. Record using digital video recording device(s).
2. At the beginning of each training module, record each chart containing learning objective and lesson outline.
3. Conduct training using final operation and maintenance data submittals.

E. Materials: Provide all handouts, books, visual aids and other informational documentation to the Owner in PDF format.

F. Cleanup: Collect used and leftover educational materials and remove from Project site give to Owner. Remove instructional equipment. Restore systems and equipment to condition existing before initial training use.

END OF SECTION 01 7900

SECTION 024119 - SELECTIVE DEMOLITION

PART 1 - GENERAL

1.1 RELATED DOCUMENTS

A. Drawings and general provisions of the Contract, including General and Supplementary Conditions and Division 01 Specification Sections, apply to this Section.

1.2 SUMMARY

A. Related Requirements:

1. Section 011000 "Summary" for restrictions on the use of the premises, Owner-occupancy requirements, and phasing requirements.
2. Section 017300 "Execution" for cutting and patching procedures.
3. Section 311000 "Site Clearing" for site clearing and removal of above- and below-grade improvements.

1.3 MATERIALS OWNERSHIP

A. Unless otherwise indicated, demolition waste becomes property of Contractor.

B. Historic items, relics, antiques, and similar objects including, but not limited to, cornerstones and their contents, commemorative plaques and tablets, and other items of interest or value to Owner that may be uncovered during demolition remain the property of Owner.

1. Carefully salvage in a manner to prevent damage and promptly return to Owner.

1.4 PREINSTALLATION MEETINGS

A. Pre-demolition Conference: Conduct conference at **Project site**

1. Inspect and discuss condition of construction to be selectively demolished.
2. Review structural load limitations of existing structure.
3. Review and finalize selective demolition schedule and verify availability of materials, demolition personnel, equipment, and facilities needed to make progress and avoid delays.
4. Review requirements of work performed by other trades that rely on substrates exposed by selective demolition operations.
5. Review areas where existing construction is to remain and requires protection.

1.5 INFORMATIONAL SUBMITTALS

A. Proposed Protection Measures: Submit report, including drawings, that indicates the measures proposed for protecting individuals and property**, for dust control and, for noise control**. Indicate proposed locations and construction of barriers.

B. Schedule of Selective Demolition Activities: Indicate the following:

1. Interruption of utility services. Indicate how long utility services will be interrupted.
2. Coordination for shutoff, capping, and continuation of utility services.
3. Use of elevator and stairs.
4. Coordination of Owner's continuing occupancy of portions of existing building and of Owner's partial occupancy of completed Work.

C. Inventory: Submit a list of items to be removed and salvaged and deliver to Owner prior to start of demolition.

D. Pre-demolition Photographs or Video: Submit before Work begins.

1.6 FIELD CONDITIONS

A. Owner will occupy portions of the State House building immediately adjacent to selective demolition area. Conduct selective demolition so Owner's operation will not be disrupted.

B. Conditions existing at time of inspection for bidding purpose will be maintained by Owner as far as practical.

1. Before selective demolition, Owner will remove the following items:

a. State House Office S100 Furnishings & Equipment.

C. Notify Architect of discrepancies between existing conditions and Drawings before proceeding with selective demolition.

D. Storage or sale of removed items or materials on-site is not permitted.

E. Utility Service: Maintain existing utilities indicated to remain in service and protect them against damage during selective demolition operations.

1. Maintain fire-protection facilities in service during selective demolition operations.

1.7 WARRANTY

A. Existing Warranties: Remove, replace, patch, and repair materials and surfaces cut or damaged during selective demolition, by methods and with materials so as not to void existing warranties. Notify warrantor before proceeding.

B. Notify warrantor on completion of selective demolition, and obtain documentation verifying that existing system has been inspected and warranty remains in effect. Submit documentation at Project closeout.

PART 2 - PRODUCTS

2.1 PEFORMANCE REQUIREMENTS

A. Regulatory Requirements: Comply with governing EPA notification regulations before beginning selective demolition. Comply with hauling and disposal regulations of authorities having jurisdiction.

B. Standards: Comply with ANSI/ASSE A10.6 and NFPA 241.

PART 3 - EXECUTION

3.1 EXAMINATION

A. Verify that utilities have been disconnected and capped before starting selective demolition operations.

B. Review record documents of existing construction provided by Owner. Owner does not guarantee that existing conditions are same as those indicated in record documents.

C. Survey existing conditions and correlate with requirements indicated to determine extent of selective demolition required.

D. When unanticipated mechanical, electrical, or structural elements that conflict with intended function or design are encountered, investigate and measure the nature and extent of conflict. Promptly submit a written report to Architect.

E. Survey of Existing Conditions: Record Existing conditions by use of preconstruction photographs and preconstruction videotapes.

F. Inventory and record the condition of items to be removed and salvaged. Provide photographs or video of conditions that might be misconstrued as damage caused by salvage operations.

3.2 UTILITY SERVICES AND MECHANICAL/ELECTRICAL SYSTEMS

A. Existing Services/Systems to Remain: Maintain services/systems indicated to remain and protect them against damage.

B. Existing Services/Systems to Be Removed, Relocated, or Abandoned: Locate, identify, disconnect, and seal or cap off indicated utility services and mechanical/electrical systems serving areas to be selectively demolished.

1. Owner will arrange to shut off indicated services/systems when requested by Contractor.
2. Arrange to shut off indicated utilities with utility companies.
3. If services/systems are required to be removed, relocated, or abandoned, provide temporary services/systems that bypass area of selective demolition and that maintain continuity of services/systems to other parts of building.
4. Disconnect, demolish, and remove fire-suppression systems, plumbing, and HVAC systems, equipment, and components indicated to be removed.

a. Piping to Be Removed: Remove portion of piping indicated to be removed and cap or plug remaining piping with same or compatible piping material.
b. Piping to Be Abandoned in Place: Drain piping and cap or plug piping with same or compatible piping material.
c. Equipment to Be Removed: Disconnect and cap services and remove equipment.
d. Equipment to Be Removed and Reinstalled: Disconnect and cap services and remove, clean, and store equipment; when appropriate, reinstall, reconnect, and make equipment operational.
e. Equipment to Be Removed and Salvaged: Disconnect and cap services and remove equipment and deliver to Owner.
f. Ducts to Be Removed: Remove portion of ducts indicated to be removed and plug remaining ducts with same or compatible ductwork material.
g. Ducts to Be Abandoned in Place: Cap or plug ducts with same or compatible ductwork material.

C. Refrigerant: Remove refrigerant from mechanical equipment to be selectively demolished according to 40 CFR 82 and regulations of authorities having jurisdiction.

3.3 PREPARATION

A. Site Access and Temporary Controls: Conduct selective demolition and debris-removal operations to ensure minimum interference with roads, streets, walks, walkways, and other adjacent occupied and used facilities.

1. Comply with requirements for access and protection specified in Section 015000 "Temporary Facilities and Controls."

B. Temporary Facilities: Provide temporary barricades and other protection required to prevent injury to people and damage to adjacent buildings and facilities to remain.

1. Provide protection to ensure safe passage of people around selective demolition area and to and from occupied portions of building.
2. Provide temporary weather protection, during interval between selective demolition of existing construction on exterior surfaces and new construction, to prevent water leakage and damage to structure and interior areas.
3. Protect walls, ceilings, floors, and other existing finish work that are to remain or that are exposed during selective demolition operations.

4. Cover and protect furniture, furnishings, and equipment that have not been removed.
5. Comply with requirements for temporary enclosures, dust control, heating, and cooling specified in Section 015000 "Temporary Facilities and Controls."

C. Temporary Shoring: Provide and maintain shoring, bracing, and structural supports as required to preserve stability and prevent movement, settlement, or collapse of construction and finishes to remain, and to prevent unexpected or uncontrolled movement or collapse of construction being demolished.

1. Strengthen or add new supports when required during progress of selective demolition.

3.4 SELECTIVE DEMOLITION, GENERAL

A. General: Demolish and remove existing construction only to the extent required by new construction and as indicated. Use methods required to complete the Work within limitations of governing regulations and as follows:

1. Proceed with selective demolition systematically, from higher to lower level. Complete selective demolition operations above each floor or tier before disturbing supporting members on the next lower level.
2. Neatly cut openings and holes plumb, square, and true to dimensions required. Use cutting methods least likely to damage construction to remain or adjoining construction. Use hand tools or small power tools designed for sawing or grinding, not hammering and chopping, to minimize disturbance of adjacent surfaces. Temporarily cover openings to remain.
3. Cut or drill from the exposed or finished side into concealed surfaces to avoid marring existing finished surfaces.
4. Do not use cutting torches until work area is cleared of flammable materials. At concealed spaces, such as duct and pipe interiors, verify condition and contents of hidden space before starting flame-cutting operations. Maintain **fire watch and** portable fire-suppression devices during flame-cutting operations.
5. Maintain adequate ventilation when using cutting torches.
6. Remove decayed, vermin-infested, or otherwise dangerous or unsuitable materials and promptly dispose of off-site.
7. Remove structural framing members and lower to ground by method suitable to avoid free fall and to prevent ground impact or dust generation.
8. Locate selective demolition equipment and remove debris and materials so as not to impose excessive loads on supporting walls, floors, or framing.
9. Dispose of demolished items and materials promptly. **Comply with requirements in Section 017419 "Construction Waste Management and Disposal."**

B. Removed and Reinstalled Items:

1. Clean and repair items to functional condition adequate for intended reuse.
2. Pack or crate items after cleaning and repairing. Identify contents of containers.
3. Protect items from damage during transport and storage.
4. Reinstall items in locations indicated. Comply with installation requirements for new materials and equipment. Provide connections, supports, and miscellaneous materials necessary to make item functional for use indicated.

C. Existing Items to Remain: Protect construction indicated to remain against damage and soiling during selective demolition. When permitted by Architect, items may be removed to a suitable, protected storage location during selective demolition and reinstalled in their original locations after selective demolition operations are complete.

3.5 SELECTIVE DEMOLITION PROCEDURES FOR SPECIFIC MATERIALS

A. Concrete: Demolish in sections. Cut concrete full depth at junctures with construction to remain and at regular intervals using power-driven saw, then remove concrete between saw cuts.

B. Concrete Slabs-on-Grade: Saw-cut perimeter of area to be demolished, then break up and remove.

C. Roofing: Remove no more existing roofing than what can be covered in one day by new roofing and so that building interior remains watertight and weathertight. See Section <Insert Section number> "<Insert Section title>" for new roofing requirements.

D. Remove existing roofing system down to substrate.

3.6 DISPOSAL OF DEMOLISHED MATERIALS

A. General: Except for items or materials indicated to be[recycled,] reused, salvaged, reinstalled, or otherwise indicated to remain Owner's property, remove demolished materials from Project site[and legally dispose of them in an EPA-approved landfill].

1. Do not allow demolished materials to accumulate on-site.
2. Remove and transport debris in a manner that will prevent spillage on adjacent surfaces and areas.
3. Comply with requirements specified in Section 017419 "Construction Waste Management and Disposal."

B. Burning: Do not burn demolished materials.

C. Disposal: Transport demolished materials off Owner's property and legally dispose of them.

3.7 CLEANING

A. Clean adjacent structures and improvements of dust, dirt, and debris caused by selective demolition operations. Return adjacent areas to condition existing before selective demolition operations began.

END OF SECTION 024119

SECTION 033000 - CAST-IN-PLACE CONCRETE

PART 1 - GENERAL

1.1 RELATED DOCUMENTS

A. Drawings and general provisions of the Contract, including General and Supplementary Conditions and Division 01 Specification Sections, apply to this Section.

1.2 SUMMARY

A. Section includes cast-in-place concrete, including formwork, reinforcement, concrete materials, mixture design, placement procedures, and finishes, for the following:

1. Footings.
2. Slabs-on-grade.
3. Suspended slabs.

B. Related Sections:
1. Division 31 Section "Earth Moving" for drainage fill under slabs-on-grade.
2. Division 32 Section "Concrete Paving" for concrete pavement and walks.

1.3 DEFINITIONS

A. Cementitious Materials: Portland cement alone or in combination with one or more of the following: blended hydraulic cement, fly ash and other pozzolans, ground granulated blast-furnace slag, and silica fume; subject to compliance with requirements.

1.4 SUBMITTALS

A. Product Data: For each type of product indicated.

B. Design Mixtures: For each concrete mixture. Submit alternate design mixtures when characteristics of materials, Project conditions, weather, test results, or other circumstances warrant adjustments.

1. Indicate amounts of mixing water to be withheld for later addition at Project site.

C. Steel Reinforcement Shop Drawings: Placing drawings that detail fabrication, bending, and placement. Include bar sizes, lengths, material, grade, bar schedules, stirrup spacing, bent bar diagrams, bar arrangement, splices and laps, mechanical connections, tie spacing, hoop spacing, and supports for concrete reinforcement.

D. Formwork Shop Drawings: Prepared by or under the supervision of a qualified professional engineer detailing fabrication, assembly, and support of formwork.

1. Shoring and Reshoring: Indicate proposed schedule and sequence of stripping formwork, shoring removal, and reshoring installation and removal.

E. Construction Joint Layout: Indicate proposed construction joints required to construct the structure.

1. Location of construction joints is subject to approval of the Architect.

F. Samples: For waterstops and vapor retarder.

G. Qualification Data: For Installer, manufacturer and testing agency.

H. Welding certificates.

I. Material Certificates: For each of the following, signed by manufacturers:

1. Cementitious materials.
2. Admixtures.
3. Form materials and form-release agents.
4. Steel reinforcement and accessories.
5. Waterstops.
6. Curing compounds.
7. Floor and slab treatments.
8. Bonding agents.
9. Adhesives.
10. Vapor retarders.
11. Semirigid joint filler.
12. Joint-filler strips.
13. Repair materials.

J. Material Test Reports: For the following, from a qualified testing agency, indicating compliance with requirements:

1. Aggregates. Include service record data indicating absence of deleterious expansion of concrete due to alkali aggregate reactivity.

K. Floor surface flatness and levelness measurements indicating compliance with specified tolerances.

L. Field quality-control reports.

M. Minutes of preinstallation conference.

1.5 QUALITY ASSURANCE

A. Installer Qualifications: A qualified installer who employs on Project personnel qualified as ACI-certified Flatwork Technician and Finisher and a supervisor who is an ACI-certified Concrete Flatwork Technician.

B. Manufacturer Qualifications: A firm experienced in manufacturing ready-mixed concrete products and that complies with ASTM C 94/C 94M requirements for production facilities and equipment.

1. Manufacturer certified according to NRMCA's "Certification of Ready Mixed Concrete Production Facilities."

C. Testing Agency Qualifications: An independent agency, acceptable to authorities having jurisdiction, qualified according to ASTM C 1077 and ASTM E 329 for testing indicated.

1. Personnel conducting field tests shall be qualified as ACI Concrete Field Testing Technician, Grade 1, according to ACI CP-1 or an equivalent certification program.
2. Personnel performing laboratory tests shall be ACI-certified Concrete Strength Testing Technician and Concrete Laboratory Testing Technician - Grade I. Testing Agency laboratory supervisor shall be an ACI-certified Concrete Laboratory Testing Technician - Grade II.

D. Source Limitations: Obtain each type or class of cementitious material of the same brand from the same manufacturer's plant, obtain aggregate from single source, and obtain admixtures from single source from single manufacturer.

E. Welding Qualifications: Qualify procedures and personnel according to AWS D1.4/D 1.4M, "Structural Welding Code - Reinforcing Steel."

F. ACI Publications: Comply with the following unless modified by requirements in the Contract Documents:

1. ACI 301, "Specifications for Structural Concrete," Sections 1 through 5.
2. ACI 117, "Specifications for Tolerances for Concrete Construction and Materials."

G. Concrete Testing Service: Engage a qualified independent testing agency to perform material evaluation tests and to design concrete mixtures.

H. Preinstallation Conference: Conduct conference at Project site.

1. Before submitting design mixtures, review concrete design mixture and examine procedures for ensuring quality of concrete materials. Require representatives of each entity directly concerned with cast-in-place concrete to attend, including the following:

a. Contractor's superintendent.
b. Independent testing agency responsible for concrete design mixtures.
c. Ready-mix concrete manufacturer.
d. Concrete subcontractor.
e. Special concrete finish subcontractor.

2. Review special inspection and testing and inspecting agency procedures for field quality control, concrete finishes and finishing, cold- and hot-weather concreting procedures, curing procedures, construction contraction and isolation joints, and joint-filler strips, semirigid joint fillers, vapor-retarder installation, anchor rod and anchorage device installation tolerances, steel reinforcement installation, floor and slab flatness and levelness measurement, concrete repair procedures, and concrete protection.

1.6 DELIVERY, STORAGE, AND HANDLING

A. Steel Reinforcement: Deliver, store, and handle steel reinforcement to prevent bending and damage.

B. Waterstops: Store waterstops under cover to protect from moisture, sunlight, dirt, oil, and other contaminants.

PART 2 - PRODUCTS

2.1 FORMWORK MATERIALS

A. Rough-formed finished concrete: Unless otherwise specified, the default finish for formed surfaces shall be rough-form finish constructed with plywood, lumber, metal or other acceptable material. Lumber shall be dressed on at least two edges and one side for tight fit. The minimum grade shall be B-C, exterior grade.

B. Nails and Fasteners: Use only galvanized nails and fasteners for securing formwork in structures exposed to weather or unconditioned spaces such as garages, canopies and porte-cocheres.

C. Form Ties: Factory-fabricated, removable or snap-off metal or glass-fiber-reinforced plastic form ties designed to resist lateral pressure of fresh concrete on forms and to minimize spalling of concrete on removal.

D. Chamfer Strips: Provide wood, metal, PVC, or rubber strips, ¾ by ¾ inch, minimum.

E. Formwork Coatings: Formwork coatings shall be not a commercial formulation that will not bond with, stain, nor adversely affect concrete surfaces or impair subsequent treatment of concrete surfaces requiring bond or adhesion, nor impede curing with water or curing compounds. Provide a product that has a maximum VOC (Volatile Organic Compounds) of 450 g/l but not greater than that permitted by the local government agency having jurisdiction in the area where the project is located.
1. Products: Subject to compliance with requirements, provide one of the following:
   a. "Enviroform", Conspec Marketing and Manufacturing Co., Inc.
   b. "Cast-Off WB", Sonneborn Building Products
   c. “Farm Fresh”, Unitex
   d. "Formshield WB"; Tamms Industries
   e. “Form-Eze Natural”, The Euclid Chemical Company, Inc.
   f. “Bio-Form”, Universal Form Clamp
   g. “Aqua Blue”, US Spec

2.2 REINFORCEMENT ACCESSORIES

A. Joint Dowel Bars: ASTM A 615/A 615M, Grade 60 (Grade 420), plain-steel bars, cut true to length with ends square and free of burrs.

B. Bar Supports: Bolsters, chairs, spacers, and other devices for spacing, supporting, and fastening reinforcing bars and welded wire reinforcement in place. Manufacture bar supports from steel wire, plastic, or precast concrete according to CRSI's "Manual of Standard Practice," of greater compressive strength than concrete and as follows:

1. For concrete surfaces exposed to view where legs of wire bar supports contact forms, use CRSI Class 1 plastic-protected steel wire or CRSI Class 2 stainless-steel bar supports.
2. For epoxy-coated reinforcement, use epoxy-coated or other dielectric-polymer-coated wire bar supports.
3. For zinc-coated reinforcement, use galvanized wire or dielectric-polymer-coated wire bar supports.

2.3 CONCRETE MATERIALS

A. Cementitious Material: Use the following cementitious materials, of the same type, brand, and source, throughout Project:

1. Portland Cement: ASTM C 150, Type I/II

B. Normal-Weight Aggregates: ASTM C 33, Class 3S coarse aggregate or better, graded. Provide aggregates from a single source with documented service record data of at least 10 years' satisfactory service in similar applications and service conditions using similar aggregates and cementitious materials.

1. Maximum Coarse-Aggregate Size: 3/4 inch (19 mm) nominal except at slabs on grade provide 1" (25 mm) nominal.
2. Fine Aggregate: Free of materials with deleterious reactivity to alkali in cement.

C. Water: ASTM C 94/C 94M and potable.

2.4 ADMIXTURES

A. Air-Entraining Admixture: ASTM C 260.

B. Chemical Admixtures: Provide admixtures certified by manufacturer to be compatible with other admixtures and that will not contribute water-soluble chloride ions exceeding those permitted in hardened concrete. Do not use calcium chloride or admixtures containing calcium chloride.

1. Water-Reducing Admixture: ASTM C 494/C 494M, Type A.
2. Retarding Admixture: ASTM C 494/C 494M, Type B.
3. Water-Reducing and Retarding Admixture: ASTM C 494/C 494M, Type D.
4. High-Range, Water-Reducing Admixture: ASTM C 494/C 494M, Type F.
5. High-Range, Water-Reducing and Retarding Admixture: ASTM C 494/C 494M, Type G.
6. Plasticizing and Retarding Admixture: ASTM C 1017/C 1017M, Type II.

2.5 WATERSTOPS

A. Flexible Rubber Waterstops: CE CRD-C 513, for embedding in concrete to prevent passage of fluids through joints. Factory fabricate corners, intersections, and directional changes.

1. Manufacturers: Subject to compliance with requirements, provide products by one of the following:

a. Greenstreak.
b. Williams Products, Inc.

2. Profile: Ribbed with center bulb .
3. Dimensions: 4 inches by 3/16 inch thick (100 mm by 4.75 mm thick); nontapered.

B. Self-Expanding Butyl Strip Waterstops: Manufactured rectangular or trapezoidal strip, butyl rubber with sodium bentonite or other hydrophilic polymers, for adhesive bonding to concrete, 3/4 by 1 inch (19 by 25 mm).

1. Products: Subject to compliance with requirements, provide one of the following:

a. Carlisle Coatings & Waterproofing, Inc.; MiraSTOP.
b. CETCO; Volclay Waterstop-RX.
c. Concrete Sealants Inc.; Conseal CS-231.
d. Greenstreak; Swellstop.
e. Henry Company, Sealants Division; Hydro-Flex.
f. JP Specialties, Inc.; Earth Shield Type 20.

2.6 VAPOR RETARDERS

A. Plastic Vapor Retarder: ASTM E 1745, Class A, with minimum permeance of 0.02 perms. Include manufacturer's recommended adhesive or pressure-sensitive tape.

1. Available Products:

a. Stego Industries, LLC; Stego Wrap 15 mil
b. W.R. Meadows; W.R. Meadows Perminator 15 mil
c. Reef Industries, Inc.; Griffolyn 15 mil.

B. Granular Fill: Clean mixture of crushed stone or crushed or uncrushed gravel; ASTM D 448, Size 57, with 100 percent passing a 1-1/2-inch (37.5-mm) sieve and 0 to 5 percent passing a No. 8 (2.36-mm) sieve.

C. Fine-Graded Granular Material: Clean mixture of crushed stone, crushed gravel, and manufactured or natural sand; ASTM D 448, Size 10, with 100 percent passing a 3/8-inch (9.5-mm) sieve, 10 to 30 percent passing a No. 100 (0.15-mm) sieve, and at least 5 percent passing No. 200 (0.075-mm) sieve; complying with deleterious substance limits of ASTM C 33 for fine aggregates.

2.7 LIQUID MEMBRANE – FORMING, CURING & CURING AND SEALING COMPOUNDS

A. Water-Based Dissipating Resin Type Curing Compound: Curing Compound shall be a dissipating resin type, which chemically breaks down after approximately 4 weeks. Membrane forming compound shall meet ASTM C 309, Types 1 and 1D Class B with a VOC content less than 350 g/L.

1. Products: Subject to compliance with requirements, provide one of the following:
   a. "Kurez DR Vox" or “Kurez W Vox”, Euclid Chemical Company
   b. "L&M Cure R", L&M Construction Chemicals
   c. “Horncure WB 30”, Tamms Industries
   d. “Hydro Cure 309”, Unitex
   e. “Sealtight 1100-Clear”, W. R. Meadows
   f. “US Spec Maxcure Resin Clear”, US Mix Co.
2. Submit manufacturer's certification that product conforms to the requirements specified and is compatible with any covering or surface treatments to be applied. Submit any instructions that must be followed prior to any subsequent surface treatments and floor coverings.

2.8 CURING MATERIALS

A. Absorptive Cover: AASHTO M 182, Class 2, burlap cloth made from jute or kenaf, weighing approximately 9 oz./sq. yd. (305 g/sq. m) when dry.

B. Moisture-Retaining Cover: ASTM C 171, polyethylene film or white burlap-polyethylene sheet.

C. Water: Potable.

2.9 RELATED MATERIALS

A. Expansion- and Isolation-Joint-Filler Strips: ASTM D 1751, asphalt-saturated cellulosic fiber or ASTM D 1752, cork or self-expanding cork.

B. Semirigid Joint Filler: Two-component, semirigid, 100 percent solids, epoxy resin with a Type A shore durometer hardness of 80 per ASTM D 2240.

C. Bonding Agent: ASTM C 1059/C 1059M, Type II, non-redispersible, acrylic emulsion or styrene butadiene.

D. Reglets: Fabricate reglets of not less than 0.022-inch- (0.55-mm-) thick, galvanized-steel sheet. Temporarily fill or cover face opening of reglet to prevent intrusion of concrete or debris.

E. Dovetail Anchor Slots: Hot-dip galvanized-steel sheet, not less than 0.034 inch (0.85 mm) thick, with bent tab anchors. Temporarily fill or cover face opening of slots to prevent intrusion of concrete or debris.

F. Expansion Anchors in Concrete:
1. ICC Approval: Only anchors evaluated by the ICC Evaluation Service, Inc. (ICC-ES) with a published Evaluation Report showing having passed Acceptance Criteria 193 and approval for use in cracked concrete and resisting wind and seismic loads shall be approved for use.
2. Type: All expansion anchors in concrete shall be only wedge type expansion, sleeve type expansion or undercut type bolts.
3. Interior Use: All expansion anchors, nuts and washers for use in interior conditioned environments free of potential moisture shall be manufactured from carbon steel zinc plated in accordance with Federal Specification QQ-Z-325C, Type II, Class 3.
4. Exterior or Exposed Use: All expansion anchors, nuts and washers for use in exposed or potentially wet environments, or for attachment of exterior cladding materials shall be galvanized or stainless steel. Galvanized bolts, nuts and washers shall conform to ASTM A 153. Stainless steel bolts shall be manufactured from 300 series stainless steel and nuts and washers from 300 series or Type 18-8 stainless steel.
5. Nuts and Washers: Nuts and washers shall be furnished from the manufacturer and used with the bolts.
6. Acceptable Products and Manufacturers – Normal and Lightweight Concrete:
   a. “Kwik Bolt TZ”, “HDA Undercut Anchor” and “HSL-3 Heavy Duty Sleeve Anchor”, Hilti Fastening Systems
   b. “Strong-Bolt Wedge Anchor”, Simpson Strong-Tie, Co, Inc.
   c. “Red Head Trubolt + Wedge Anchor”, ITW Red Head
   d. “DUC Undercut Anchor”, USP Structural Connectors“Power Stud + SD2”, Powers Fasteners, Inc
   e. “SRS TZ Carbon Steel Anchor”, MKT Metall-Kunststoff-Technik
   f. “Torq-Cut Self Undercutting Anchor”, Simpson Strong-Tie, Co. Inc. (ESR Pending)

7. Acceptable Products and Manufacturers – Normal and Light Weight Concrete on Corrugated Deck:
   a. "Kwik Bolt TZ", Hilti Fastening System
   b. Strong-Bolt Wedge-Anchor", Simpson Strong-Tie, Co, Inc.
   c. Power Stud + SD2", Powers Fasteners, Inc.
8. Substitutions for products noted in the drawings may be considered provided complete technical information and job references are furnished to the Engineer for approval prior to commencement of work. Failure to obtain approval for anchor substitutions will render the contractor liable for the design and performance of the anchor

G. Screw Anchors in Concrete
1. Approvals: Only anchors evaluated by the ICC Evaluation Service, Inc. (ICC-ES) with a published Evaluation Report showing having passed Acceptance Criteria 193 and approved for use in cracked concrete and resisting wind and seismic loads shall be approved for use.
2. Interior Use: All screw anchors for use in interior conditioned environments free of potential moisture shall be manufactured from carbon steel zinc plated in accordance with Federal Specification QQ-Z-325C, Type II, Class 3.
3. Exterior or Exposed Use: All screw anchors for use in exposed or potentially wet environments, or for attachment of exterior cladding materials shall be galvanized or stainless steel. Galvanized anchors shall conform to ASTM A 153. Stainless steel anchors shall be manufactured from 300 series stainless steel.
4. Acceptable Products and Manufacturers – All Conditions:
   a. "Titen HD", Simpson Strong-Tie Co., Inc.
   b. "Snake+Anchor" Powers Fasteners, Inc.
   c. "Wedge-Bolt+", Powers Fasteners, Inc. (greater than ¼ in. diameter)
5. Substitutions for products noted in the drawings may be considered provided complete technical information and job references are furnished to the Engineer for approval prior to commencement of work. Failure to obtain approval for anchor substitutions will render the contractor liable for the design and performance of the anchor.

2.10 REPAIR MATERIALS

A. Repair Underlayment: Cement-based, polymer-modified, self-leveling product that can be applied in thicknesses from 1/8 inch (3.2 mm) and that can be feathered at edges to match adjacent floor elevations.

1. Cement Binder: ASTM C 150, portland cement or hydraulic or blended hydraulic cement as defined in ASTM C 219.
2. Primer: Product of underlayment manufacturer recommended for substrate, conditions, and application.
3. Aggregate: Well-graded, washed gravel, 1/8 to 1/4 inch (3.2 to 6 mm) or coarse sand as recommended by underlayment manufacturer.
4. Compressive Strength: Not less than 4100 psi (29 MPa) at 28 days when tested according to ASTM C 109/C 109M.

B. Repair Overlayment: Cement-based, polymer-modified, self-leveling product that can be applied in thicknesses from 1/4 inch (6.4 mm) and that can be filled in over a scarified surface to match adjacent floor elevations.

1. Cement Binder: ASTM C 150, portland cement or hydraulic or blended hydraulic cement as defined in ASTM C 219.

2. Primer: Product of topping manufacturer recommended for substrate, conditions, and application.
3. Aggregate: Well-graded, washed gravel, 1/8 to 1/4 inch (3.2 to 6 mm) or coarse sand as recommended by topping manufacturer.
4. Compressive Strength: Not less than 5000 psi (34.5 MPa) at 28 days when tested according to ASTM C 109/C 109M.

2.11 CONCRETE MIXTURES, GENERAL

A. Prepare design mixtures for each type and strength of concrete, proportioned on the basis of laboratory trial mixture or field test data, or both, according to ACI 301.

1. Use a qualified independent testing agency for preparing and reporting proposed mixture designs based on laboratory trial mixtures.

B. Limit water-soluble, chloride-ion content in hardened concrete to 0.06 percent by weight of cement.

C. Admixtures: Use admixtures according to manufacturer's written instructions.

1. Use water-reducing, high-range water-reducing or plasticizing admixture in concrete, as required, for placement and workability.
2. Use water-reducing and retarding admixture when required by high temperatures, low humidity, or other adverse placement conditions.
3. Use water-reducing admixture in pumped concrete, concrete for heavy-use industrial slabs and parking structure slabs, concrete required to be watertight, and concrete with a water-cementitious materials ratio below 0.50.
4. Use corrosion-inhibiting admixture in concrete mixtures where indicated.

2.12 CONCRETE MIXTURES FOR BUILDING ELEMENTS

A. Proportion normal-weight concrete mixture as indicated on the structural drawings.

2.13 FABRICATING REINFORCEMENT

A. Fabricate steel reinforcement according to CRSI's "Manual of Standard Practice."

2.14 CONCRETE MIXING

A. Ready-Mixed Concrete: Measure, batch, mix, and deliver concrete according to ASTM C 94/C 94M and ASTM C 1116/C 1116M, and furnish batch ticket information.

1. When air temperature is between 85 and 90 deg F (30 and 32 deg C), reduce mixing and delivery time from 1-1/2 hours to 75 minutes; when air temperature is above 90 deg F (32 deg C), reduce mixing and delivery time to 60 minutes.

B. Project-Site Mixing: Measure, batch, and mix concrete materials and concrete according to ASTM C 94/C 94M. Mix concrete materials in appropriate drum-type batch machine mixer.

1. For mixer capacity of 1 cu. yd. (0.76 cu. m) or smaller, continue mixing at least 1-1/2 minutes, but not more than 5 minutes after ingredients are in mixer, before any part of batch is released.
2. For mixer capacity larger than 1 cu. yd. (0.76 cu. m), increase mixing time by 15 seconds for each additional 1 cu. yd. (0.76 cu. m).
3. Provide batch ticket for each batch discharged and used in the Work, indicating Project identification name and number, date, mixture type, mixture time, quantity, and amount of water added. Record approximate location of final deposit in structure.

PART 3 - EXECUTION

3.1 FORMWORK

A. Design, erect, shore, brace, and maintain formwork, according to ACI 301, to support vertical, lateral, static, and dynamic loads, and construction loads that might be applied, until structure can support such loads.

B. Construct formwork so concrete members and structures are of size, shape, alignment, elevation, and position indicated, within tolerance limits of ACI 117.

C. Limit concrete surface irregularities, designated by ACI 347 as abrupt or gradual, as follows:

1. Class A, 1/8 inch (3.2 mm) for smooth-formed finished surfaces.
2. Class B, 1/4 inch (6 mm) for rough-formed finished surfaces.

D. Construct forms tight enough to prevent loss of concrete mortar.

E. Fabricate forms for easy removal without hammering or prying against concrete surfaces. Provide crush or wrecking plates where stripping may damage cast concrete surfaces. Provide top forms for inclined surfaces steeper than 1.5 horizontal to 1 vertical.

1. Install keyways, reglets, recesses, and the like, for easy removal.
2. Do not use rust-stained steel form-facing material.

F. Set edge forms, bulkheads, and intermediate screed strips for slabs to achieve required elevations and slopes in finished concrete surfaces. Provide and secure units to support screed strips; use strike-off templates or compacting-type screeds.

G. Provide temporary openings for cleanouts and inspection ports where interior area of formwork is inaccessible. Close openings with panels tightly fitted to forms and securely braced to prevent loss of concrete mortar. Locate temporary openings in forms at inconspicuous locations.

H. Chamfer exterior corners and edges of permanently exposed concrete.

I. Form openings, chases, offsets, sinkages, keyways, reglets, blocking, screeds, and bulkheads required in the Work. Determine sizes and locations from trades providing such items.

J. Clean forms and adjacent surfaces to receive concrete. Remove chips, wood, sawdust, dirt, and other debris just before placing concrete.

K. Retighten forms and bracing before placing concrete, as required, to prevent mortar leaks and maintain proper alignment.

L. Coat contact surfaces of forms with form-release agent, according to manufacturer's written instructions, before placing reinforcement.

3.2 EMBEDDED ITEMS

A. Place and secure anchorage devices and other embedded items required for adjoining work that is attached to or supported by cast-in-place concrete. Use setting drawings, templates, diagrams, instructions, and directions furnished with items to be embedded.

1. Install anchor rods, accurately located, to elevations required and complying with tolerances in Section 7.5 of AISC's "Code of Standard Practice for Steel Buildings and Bridges."
2. Install reglets to receive waterproofing and to receive through-wall flashings in outer face of concrete frame at exterior walls, where flashing is shown at lintels, shelf angles, and other conditions.
3. Install dovetail anchor slots in concrete structures as indicated.

3.3 REMOVING AND REUSING FORMS

A. General: Formwork for sides of beams, walls, columns, and similar parts of the Work that does not support weight of concrete may be removed after cumulatively curing at not less than 50 deg F (10 deg C) for 24 hours after placing concrete. Concrete has to be hard enough to not be damaged by form-removal operations and curing and protection operations need to be maintained.

1. Leave formwork for beam soffits, joists, slabs, and other structural elements that supports weight of concrete in place until concrete has achieved at least 70 percent of its 28-day design compressive strength.
2. Remove forms only if shores have been arranged to permit removal of forms without loosening or disturbing shores.

B. Clean and repair surfaces of forms to be reused in the Work. Split, frayed, delaminated, or otherwise damaged form-facing material will not be acceptable for exposed surfaces. Apply new form-release agent.

C. When forms are reused, clean surfaces, remove fins and laitance, and tighten to close joints. Align and secure joints to avoid offsets. Do not use patched forms for exposed concrete surfaces unless approved by Architect.

3.4 STEEL REINFORCEMENT

A. General: Comply with CRSI's "Manual of Standard Practice" for placing reinforcement.

1. Do not cut or puncture vapor retarder. Repair damage and reseal vapor retarder before placing concrete.

B. Clean reinforcement of loose rust and mill scale, earth, ice, and other foreign materials that would reduce bond to concrete.

C. Accurately position, support, and secure reinforcement against displacement. Locate and support reinforcement with bar supports to maintain minimum concrete cover. Do not tack weld crossing reinforcing bars.

1. Weld reinforcing bars according to AWS D1.4/D 1.4M, where indicated.

D. Set wire ties with ends directed into concrete, not toward exposed concrete surfaces.

E. Install welded wire reinforcement in longest practicable lengths on bar supports spaced to minimize sagging. Lap edges and ends of adjoining sheets at least one mesh spacing. Offset laps of adjoining sheet widths to prevent continuous laps in either direction. Lace overlaps with wire.

3.5 JOINTS

A. General: Construct joints true to line with faces perpendicular to surface plane of concrete.

B. Construction Joints: Install so strength and appearance of concrete are not impaired, at locations indicated or as approved by Architect.

1. Place joints perpendicular to main reinforcement. Continue reinforcement across construction joints unless otherwise indicated. Do not continue reinforcement through sides of strip placements of floors and slabs.
2. Form keyed joints as indicated. Embed keys at least 1-1/2 inches (38 mm) into concrete.
3. Locate joints for beams, slabs, joists, and girders in the middle third of spans. Offset joints in girders a minimum distance of twice the beam width from a beam-girder intersection.
4. Locate horizontal joints in walls and columns at underside of floors, slabs, beams, and girders and at the top of footings or floor slabs.
5. Space vertical joints in walls as indicated. Locate joints beside piers integral with walls, near corners, and in concealed locations where possible.
6. Use a bonding agent at locations where fresh concrete is placed against hardened or partially hardened concrete surfaces.
7. Use epoxy-bonding adhesive at locations where fresh concrete is placed against hardened or partially hardened concrete surfaces.

C. Contraction Joints in Slabs-on-Grade: Form weakened-plane contraction joints, sectioning concrete into areas as indicated. Construct contraction joints for a depth equal to at least one-fourth of concrete thickness as follows:

1. Grooved Joints: Form contraction joints after initial floating by grooving and finishing each edge of joint to a radius of 1/8 inch (3.2 mm). Repeat grooving of contraction joints after applying surface finishes. Eliminate groover tool marks on concrete surfaces.
2. Sawed Joints: Form contraction joints with power saws equipped with shatterproof abrasive or diamond-rimmed blades. Cut 1/8-inch- (3.2-mm-) wide joints into concrete when cutting action will not tear, abrade, or otherwise damage surface and before concrete develops random contraction cracks.

D. Isolation Joints in Slabs-on-Grade: After removing formwork, install joint-filler strips at slab junctions with vertical surfaces, such as column pedestals, foundation walls, grade beams, and other locations, as indicated.

1. Extend joint-filler strips full width and depth of joint, terminating flush with finished concrete surface unless otherwise indicated.
2. Terminate full-width joint-filler strips not less than 1/2 inch (13 mm) or more than 1 inch (25 mm) below finished concrete surface where joint sealants, specified in Division 07 Section "Joint Sealants," are indicated.

3. Install joint-filler strips in lengths as long as practicable. Where more than one length is required, lace or clip sections together.

E. Doweled Joints: Install dowel bars and support assemblies at joints where indicated. Lubricate or asphalt coat one-half of dowel length to prevent concrete bonding to one side of joint.

3.6 WATERSTOPS

A. Flexible Waterstops: Install in construction joints and at other joints indicated to form a continuous diaphragm. Install in longest lengths practicable. Support and protect exposed waterstops during progress of the Work. Field fabricate joints in waterstops according to manufacturer's written instructions.

B. Self-Expanding Strip Waterstops: Install in construction joints and at other locations indicated, according to manufacturer's written instructions, adhesive bonding, mechanically fastening, and firmly pressing into place. Install in longest lengths practicable.

3.7 CONCRETE PLACEMENT

A. Before placing concrete, verify that installation of formwork, reinforcement, and embedded items is complete and that required inspections have been performed.

B. Do not add water to concrete during delivery, at Project site, or during placement unless approved by Architect.

C. Before test sampling and placing concrete, water may be added at Project site, subject to limitations of ACI 301.

1. Do not add water to concrete after adding high-range water-reducing admixtures to mixture.

D. Deposit concrete continuously in one layer or in horizontal layers of such thickness that no new concrete will be placed on concrete that has hardened enough to cause seams or planes of weakness. If a section cannot be placed continuously, provide construction joints as indicated. Deposit concrete to avoid segregation.

1. Deposit concrete in horizontal layers of depth to not exceed formwork design pressures and in a manner to avoid inclined construction joints.
2. Consolidate placed concrete with mechanical vibrating equipment according to ACI 301.
3. Do not use vibrators to transport concrete inside forms. Insert and withdraw vibrators vertically at uniformly spaced locations to rapidly penetrate placed layer and at least 6 inches (150 mm) into preceding layer. Do not insert vibrators into lower layers of concrete that have begun to lose plasticity. At each insertion, limit duration of vibration to time necessary to consolidate concrete and complete embedment of reinforcement and other embedded items without causing mixture constituents to segregate.

E. Deposit and consolidate concrete for floors and slabs in a continuous operation, within limits of construction joints, until placement of a panel or section is complete.

1. Consolidate concrete during placement operations so concrete is thoroughly worked around reinforcement and other embedded items and into corners.
2. Maintain reinforcement in position on chairs during concrete placement.
3. Screed slab surfaces with a straightedge and strike off to correct elevations.

4. Slope surfaces uniformly to drains where required.
5. Begin initial floating using bull floats or darbies to form a uniform and open-textured surface plane, before excess bleedwater appears on the surface. Do not further disturb slab surfaces before starting finishing operations.

F. Cold-Weather Placement: Comply with ACI 306.1 and as follows. Protect concrete work from physical damage or reduced strength that could be caused by frost, freezing actions, or low temperatures.

1. When average high and low temperature is expected to fall below 40 deg F (4.4 deg C) for three successive days, maintain delivered concrete mixture temperature within the temperature range required by ACI 301.
2. Do not use frozen materials or materials containing ice or snow. Do not place concrete on frozen subgrade or on subgrade containing frozen materials.
3. Do not use calcium chloride, salt, or other materials containing antifreeze agents or chemical accelerators unless otherwise specified and approved in mixture designs.

G. Hot-Weather Placement: Comply with ACI 301 and as follows:

1. Maintain concrete temperature below 90 deg F (32 deg C) at time of placement. Chilled mixing water or chopped ice may be used to control temperature, provided water equivalent of ice is calculated to total amount of mixing water. Using liquid nitrogen to cool concrete is Contractor's option.
2. Fog-spray forms, steel reinforcement, and subgrade just before placing concrete. Keep subgrade uniformly moist without standing water, soft spots, or dry areas.

3.8 FINISHING FORMED SURFACES

A. Rough-Formed Finish: As-cast concrete texture imparted by form-facing material with tie holes and defects repaired and patched. Remove fins and other projections that exceed specified limits on formed-surface irregularities.

1. Apply to concrete surfaces not exposed to public view .

B. Smooth-Formed Finish: As-cast concrete texture imparted by form-facing material, arranged in an orderly and symmetrical manner with a minimum of seams. Repair and patch tie holes and defects. Remove fins and other projections that exceed specified limits on formed-surface irregularities.

1. Apply to concrete surfaces to be covered with a coating or covering material applied directly to concrete.

C. Rubbed Finish: Apply the following to smooth-formed finished as-cast concrete where indicated:

1. Smooth-Rubbed Finish: Not later than one day after form removal, moisten concrete surfaces and rub with carborundum brick or another abrasive until producing a uniform color and texture. Do not apply cement grout other than that created by the rubbing process.

D. Related Unformed Surfaces: At tops of walls, horizontal offsets, and similar unformed surfaces adjacent to formed surfaces, strike off smooth and finish with a texture matching adjacent formed surfaces. Continue final surface treatment of formed surfaces uniformly across adjacent unformed surfaces unless otherwise indicated.

3.9 FINISHING FLOORS AND SLABS

A. General: Comply with ACI 302.1R recommendations for screeding, restraightening, and finishing operations for concrete surfaces. Do not wet concrete surfaces.

B. Scratch Finish: While still plastic, texture concrete surface that has been screeded and bull-floated or darbied. Use stiff brushes, brooms, or rakes to produce a profile amplitude of 1/4 inch (6 mm) in one direction.

1. Apply scratch finish to surfaces to receive concrete floor toppings.

C. Float Finish: Consolidate surface with power-driven floats or by hand floating if area is small or inaccessible to power driven floats. Restraighten, cut down high spots, and fill low spots. Repeat float passes and restraightening until surface is left with a uniform, smooth, granular texture.

1. Apply float finish to surfaces to receive trowel finish and to be covered with fluid-applied or sheet waterproofing, built-up or membrane roofing, or sand-bed terrazzo.

D. Trowel Finish: After applying float finish, apply first troweling and consolidate concrete by hand or power-driven trowel. Continue troweling passes and restraighten until surface is free of trowel marks and uniform in texture and appearance. Grind smooth any surface defects that would telegraph through applied coatings or floor coverings.

1. Apply a trowel finish to surfaces exposed to view or to be covered with resilient flooring, carpet, ceramic or quarry tile set over a cleavage membrane, paint, or another thin-film-finish coating system.
2. Finish surfaces to the following tolerances, according to ASTM E 1155 (ASTM E 1155M), for a randomly trafficked floor surface:

a. Specified overall values of flatness, F(F) 25; and of levelness, F(L) 20; with minimum local values of flatness, F(F) 17; and of levelness, F(L) 15.

3. Finish and measure surface so gap at any point between concrete surface and an unleveled, freestanding, 10-ft.- (3.05-m-) long straightedge resting on two high spots and placed anywhere on the surface does not exceed 1/8 inch (3.2 mm).

E. Broom Finish: Apply a broom finish to exterior concrete platforms, steps, ramps, and elsewhere as indicated.

1. Immediately after float finishing, slightly roughen trafficked surface by brooming with fiber-bristle broom perpendicular to main traffic route. Coordinate required final finish with Architect before application.

3.10 MISCELLANEOUS CONCRETE ITEMS

A. Filling In: Fill in holes and openings left in concrete structures after work of other trades is in place unless otherwise indicated. Mix, place, and cure concrete, as specified, to blend with in-place construction. Provide other miscellaneous concrete filling indicated or required to complete the Work.

B. Curbs: Provide monolithic finish to interior curbs by stripping forms while concrete is still green and by steel-troweling surfaces to a hard, dense finish with corners, intersections, and terminations slightly rounded.

C. Equipment Bases and Foundations: Provide machine and equipment bases and foundations as shown on Drawings. Set anchor bolts for machines and equipment at correct elevations, complying with diagrams or templates from manufacturer furnishing machines and equipment.

D. Steel Pan Stairs: Provide concrete fill for steel pan stair treads, landings, and associated items. Cast-in inserts and accessories as shown on Drawings. Screed, tamp, and trowel finish concrete surfaces.

3.11 CONCRETE PROTECTING AND CURING

A. General: Protect freshly placed concrete from premature drying and excessive cold or hot temperatures. Comply with ACI 306.1 for cold-weather protection and ACI 301 for hot-weather protection during curing.

B. Evaporation Retarder: Apply evaporation retarder to unformed concrete surfaces if hot, dry, or windy conditions cause moisture loss approaching 0.2 lb/sq. ft. x h (1 kg/sq. m x h) before and during finishing operations. Apply according to manufacturer's written instructions after placing, screeding, and bull floating or darbying concrete, but before float finishing.

C. Formed Surfaces: Cure formed concrete surfaces, including underside of beams, supported slabs, and other similar surfaces. If forms remain during curing period, moist cure after loosening forms. If removing forms before end of curing period, continue curing for the remainder of the curing period.

D. Unformed Surfaces: Begin curing immediately after finishing concrete. Cure unformed surfaces, including floors and slabs, concrete floor toppings, and other surfaces.

E. Cure concrete according to ACI 308.1, by one or a combination of the following methods:

1. Moisture Curing: Keep surfaces continuously moist for not less than seven days with the following materials:

    a. Water.
    b. Continuous water-fog spray.
    c. Absorptive cover, water saturated, and kept continuously wet. Cover concrete surfaces and edges with 12-inch (300-mm) lap over adjacent absorptive covers.

2. Moisture-Retaining-Cover Curing: Cover concrete surfaces with moisture-retaining cover for curing concrete, placed in widest practicable width, with sides and ends lapped at least 12 inches (300 mm), and sealed by waterproof tape or adhesive. Cure for not less than seven days. Immediately repair any holes or tears during curing period using cover material and waterproof tape.

    a. Moisture cure or use moisture-retaining covers to cure concrete surfaces to receive floor coverings.
    b. Moisture cure or use moisture-retaining covers to cure concrete surfaces to receive penetrating liquid floor treatments.
    c. Cure concrete surfaces to receive floor coverings with either a moisture-retaining cover or a curing compound that the manufacturer certifies will not interfere with bonding of floor covering used on Project.

3.12 LIQUID FLOOR TREATMENTS

A. Sealing Coat: Uniformly apply a continuous sealing coat of curing and sealing compound to hardened concrete by power spray or roller according to manufacturer's written instructions.

3.13 JOINT FILLING

A. Prepare, clean, and install joint filler according to manufacturer's written instructions.

1. Defer joint filling until concrete has aged at least one six month(s). Do not fill joints until construction traffic has permanently ceased.

B. Remove dirt, debris, saw cuttings, curing compounds, and sealers from joints; leave contact faces of joint clean and dry.

C. Install semirigid joint filler full depth in saw-cut joints and at least 2 inches (50 mm) deep in formed joints. Overfill joint and trim joint filler flush with top of joint after hardening.

3.14 CONCRETE SURFACE REPAIRS

A. Defective Concrete: Repair and patch defective areas when approved by Architect. Remove and replace concrete that cannot be repaired and patched to Architect's approval.

B. Patching Mortar: Mix dry-pack patching mortar, consisting of one part portland cement to two and one-half parts fine aggregate passing a No. 16 (1.18-mm) sieve, using only enough water for handling and placing.

C. Repairing Formed Surfaces: Surface defects include color and texture irregularities, cracks, spalls, air bubbles, honeycombs, rock pockets, fins and other projections on the surface, and stains and other discolorations that cannot be removed by cleaning.

1. Immediately after form removal, cut out honeycombs, rock pockets, and voids more than 1/2 inch (13 mm) in any dimension to solid concrete. Limit cut depth to 3/4 inch (19 mm). Make edges of cuts perpendicular to concrete surface. Clean, dampen with water, and brush-coat holes and voids with bonding agent. Fill and compact with patching mortar before bonding agent has dried. Fill form-tie voids with patching mortar or cone plugs secured in place with bonding agent.
2. Repair defects on surfaces exposed to view by blending white portland cement and standard portland cement so that, when dry, patching mortar will match surrounding color. Patch a test area at inconspicuous locations to verify mixture and color match before proceeding with patching. Compact mortar in place and strike off slightly higher than surrounding surface.
3. Repair defects on concealed formed surfaces that affect concrete's durability and structural performance as determined by Architect.

D. Repairing Unformed Surfaces: Test unformed surfaces, such as floors and slabs, for finish and verify surface tolerances specified for each surface. Correct low and high areas. Test surfaces sloped to drain for trueness of slope and smoothness; use a sloped template.

1. Repair finished surfaces containing defects. Surface defects include spalls, popouts, honeycombs, rock pockets, crazing and cracks in excess of 0.01 inch (0.25 mm) wide or that penetrate to reinforcement or completely through unreinforced sections regardless of width, and other objectionable conditions.

2. After concrete has cured at least 14 days, correct high areas by grinding.
3. Correct localized low areas during or immediately after completing surface finishing operations by cutting out low areas and replacing with patching mortar. Finish repaired areas to blend into adjacent concrete.
4. Correct other low areas scheduled to receive floor coverings with a repair underlayment. Prepare, mix, and apply repair underlayment and primer according to manufacturer's written instructions to produce a smooth, uniform, plane, and level surface. Feather edges to match adjacent floor elevations.
5. Correct other low areas scheduled to remain exposed with a repair topping. Cut out low areas to ensure a minimum repair topping depth of 1/4 inch (6 mm) to match adjacent floor elevations. Prepare, mix, and apply repair topping and primer according to manufacturer's written instructions to produce a smooth, uniform, plane, and level surface.
6. Repair defective areas, except random cracks and single holes 1 inch (25 mm) or less in diameter, by cutting out and replacing with fresh concrete. Remove defective areas with clean, square cuts and expose steel reinforcement with at least a 3/4-inch (19-mm) clearance all around. Dampen concrete surfaces in contact with patching concrete and apply bonding agent. Mix patching concrete of same materials and mixture as original concrete except without coarse aggregate. Place, compact, and finish to blend with adjacent finished concrete. Cure in same manner as adjacent concrete.
7. Repair random cracks and single holes 1 inch (25 mm) or less in diameter with patching mortar. Groove top of cracks and cut out holes to sound concrete and clean off dust, dirt, and loose particles. Dampen cleaned concrete surfaces and apply bonding agent. Place patching mortar before bonding agent has dried. Compact patching mortar and finish to match adjacent concrete. Keep patched area continuously moist for at least 72 hours.

E. Perform structural repairs of concrete, subject to Architect's approval, using epoxy adhesive and patching mortar.

F. Repair materials and installation not specified above may be used, subject to Architect's approval.

3.15 FIELD QUALITY CONTROL

A. Testing and Inspecting: Engage a qualified testing and inspecting agency to perform tests and inspections and to submit reports.

B. Inspections:

1. Steel reinforcement placement.
2. Steel reinforcement welding.
3. Headed bolts and studs.
4. Verification of use of required design mixture.
5. Concrete placement, including conveying and depositing.
6. Curing procedures and maintenance of curing temperature.
7. Verification of concrete strength before removal of shores and forms from beams and slabs.

C. Concrete Tests: Testing of composite samples of fresh concrete obtained according to ASTM C 172 shall be performed according to the following requirements:

1. Testing Frequency: Obtain one composite sample for each day's pour of each concrete mixture exceeding 5 cu. yd. (4 cu. m), but less than 25 cu. yd. (19 cu. m), plus one set for each additional 50 cu. yd. (38 cu. m) or fraction thereof.

2. Testing Frequency: Obtain at least one composite sample for each 100 cu. yd. (76 cu. m) or fraction thereof of each concrete mixture placed each day.

    a. When frequency of testing will provide fewer than five compressive-strength tests for each concrete mixture, testing shall be conducted from at least five randomly selected batches or from each batch if fewer than five are used.

3. Slump: ASTM C 143/C 143M; one test at point of placement for each composite sample, but not less than one test for each day's pour of each concrete mixture. Perform additional tests when concrete consistency appears to change.
4. Air Content: ASTM C 231, pressure method, for normal-weight concrete; one test for each composite sample, but not less than one test for each day's pour of each concrete mixture.
5. Concrete Temperature: ASTM C 1064/C 1064M; one test hourly when air temperature is 40 deg F (4.4 deg C) and below and when 80 deg F (27 deg C) and above, and one test for each composite sample.
6. Unit Weight: ASTM C 567, fresh unit weight of structural lightweight concrete; one test for each composite sample, but not less than one test for each day's pour of each concrete mixture.
7. Compression Test Specimens: ASTM C 31/C 31M.

    a. Cast and laboratory cure two sets of two standard cylinder specimens for each composite sample.
    b. Cast and field cure two sets of two standard cylinder specimens for each composite sample.

8. Compressive-Strength Tests: ASTM C 39/C 39M; test one set of two laboratory-cured specimens at 7 days and one set of two specimens at 28 days.

    a. Test one set of two field-cured specimens at 7 days and one set of two specimens at 28 days.
    b. A compressive-strength test shall be the average compressive strength from a set of two specimens obtained from same composite sample and tested at age indicated.

9. When strength of field-cured cylinders is less than 85 percent of companion laboratory-cured cylinders, Contractor shall evaluate operations and provide corrective procedures for protecting and curing in-place concrete.
10. Strength of each concrete mixture will be satisfactory if every average of any three consecutive compressive-strength tests equals or exceeds specified compressive strength and no compressive-strength test value falls below specified compressive strength by more than 500 psi (3.4 MPa).
11. Test results shall be reported in writing to Architect, concrete manufacturer, and Contractor within 48 hours of testing. Reports of compressive-strength tests shall contain Project identification name and number, date of concrete placement, name of concrete testing and inspecting agency, location of concrete batch in Work, design compressive strength at 28 days, concrete mixture proportions and materials, compressive breaking strength, and type of break for both 7- and 28-day tests.
12. Nondestructive Testing: Impact hammer, sonoscope, or other nondestructive device may be permitted by Architect but will not be used as sole basis for approval or rejection of concrete.
13. Additional Tests: Testing and inspecting agency shall make additional tests of concrete when test results indicate that slump, air entrainment, compressive strengths, or other requirements have not been met, as directed by Architect. Testing and inspecting agency may conduct tests to determine adequacy of concrete by cored cylinders complying with ASTM C 42/C 42M or by other methods as directed by Architect.

14. Additional testing and inspecting, at Contractor's expense, will be performed to determine compliance of replaced or additional work with specified requirements.
15. Correct deficiencies in the Work that test reports and inspections indicate do not comply with the Contract Documents.

D. Measure floor and slab flatness and levelness according to ASTM E 1155 (ASTM E 1155M) within 24 hours of finishing.

3.16 PROTECTION OF LIQUID FLOOR TREATMENTS

A. Protect liquid floor treatment from damage and wear during the remainder of construction period. Use protective methods and materials, including temporary covering, recommended in writing by liquid floor treatments installer.

END OF SECTION 03 3000

SECTION 035300 - CONCRETE TOPPING

PART 1 - GENERAL

1.1 RELATED DOCUMENTS

A. Drawings and general provisions of the Contract, including General and Supplementary Conditions and Division 01 Specification Sections, apply to this Section.

1.2 PREINSTALLATION MEETINGS

A. Pre-installation Conference: Conduct conference at **Project site**.

1.3 ACTION SUBMITTALS

A. Product Data: For each type of product.

1.4 INFORMATIONAL SUBMITTALS

A. Product Test Reports: For each concrete floor topping, for tests performed by **a qualified testing agency**.

1.5 DELIVERY, STORAGE, AND HANDLING

A. Deliver materials in original packages and containers, with seals unbroken, bearing manufacturer's labels indicating brand name and directions for storage, mixing with other components, and application.

B. Store materials to comply with manufacturer's written instructions to prevent deterioration from moisture or other detrimental effects.

1.6 FIELD CONDITIONS

A. Environmental Limitations: Comply with manufacturer's written instructions for substrate temperature and moisture content, ambient temperature and humidity, ventilation, and other conditions affecting concrete floor topping performance.

1. Place concrete floor topping only when ambient temperature and temperature of base slabs are between 50 and 86 deg F10 and 30 deg C.

B. Close areas to traffic during topping application and, after application, for time period recommended in writing by manufacturer.

PART 2 - PRODUCTS

2.1 CONCRETE FLOOR TOPPINGS

A. Cementitious repair mortar, high-early-strength, with a corrosion inhibitor, for all exterior horizontal concrete repairs both below- and above-grade, including bridge-deck repairs, parking-garage floor repairs and ramps. Factory-prepared and dry-packaged mixture.

1. Products: Subject to compliance with requirements, provide one of the following:

   a. Mapei; Mapecem 102 or Planitop 18 ES
   b. Ardex; K 301
   c. Dayton Superior Corporation; Level Topping TM Exterior
   d. L&M Construction Chemicals, Inc.; Duracrete TM
   e. Metalcrete Industries; Thickpave
   f. US Concrete Materials, LLC; Bond-Tec CNC.

2. Compressive Strength (28 Days): > 4,300 psi; ASTM C 109/C 109M.

2.2 CURING MATERIALS

A. Absorptive Cover: AASHTO M 182, Class 2, burlap cloth made from jute or kenaf, weighing approximately 9 oz./sq. yd.305 g/sq. m when dry.

B. Moisture-Retaining Cover: ASTM C 171, polyethylene film or white burlap-polyethylene sheet.

C. Water: Potable.

D. Clear, Waterborne, Membrane-Forming Curing Compound: ASTM C 309, Type 1, Class B, 25 percent solids content, minimum.

2.3 RELATED MATERIALS

A. Water: Potable.

2.4 MIXING

A. Floor Topping: Mix concrete floor topping materials and water in appropriate drum-type batch machine mixer or truck mixer according to manufacturer's written instructions.

PART 3 - EXECUTION

3.1 EXAMINATION

A. Examine substrates, with Installer present, for conditions affecting performance of the Work.

B. Proceed with application only after unsatisfactory conditions have been corrected.

3.2 PREPARATION

A. Existing Concrete: Sawcut perimeter of area to receive topping to depth of recess indicated, remove surface of existing floor to depth indicated. Remove existing surface treatments and deteriorated and unsound concrete. Mechanically abrade base slabs to produce a heavily scarified surface profile with an amplitude of 1/4 inch6 mm.

1. Prepare and clean existing base slabs according to concrete floor topping manufacturer's written instructions. Fill voids, cracks, and cavities in base slabs.
2. Mechanically remove contaminants from existing concrete that might impair bond of floor topping.

3.3 FLOOR TOPPING APPLICATION

A. Existing Concrete: Apply epoxy bonding adhesive, mixed according to manufacturer’s written instructions, and scrub into dry base slabs to a thickness of 1/16 to 1/8 inch, without puddling. Place floor topping while adhesive is still tacky.

B. Place concrete floor topping continuously in a single layer, tamping and consolidating to achieve tight contact with bonding surface. Do not permit cold joints or seams to develop within pour strip.

1. Screed surface with a straightedge and strike off to correct elevations.
2. Slope surfaces uniformly where indicated.
3. Begin initial floating, using bull floats to form a uniform and open-textured surface plane free of humps or hollows.

C. Finishing: Consolidate surface with hand floats as soon as concrete floor topping can support operator. Restraighten, cut down high spots, and fill low spots. Repeat float passes and restraightening until concrete floor topping surface has a uniform, smooth, granular texture.

1. Broom finish: After floating surface, provide high broom finish to surface.

3.4 PROTECTING AND CURING

A. General: Protect freshly placed concrete floor topping from premature drying and excessive cold or hot temperatures.

B. Evaporation Retarder: Apply evaporation retarder to concrete floor topping surfaces in hot, dry, or windy conditions before and during finishing operations. Apply according to manufacturer's written instructions after placing, screeding, and bull floating or darbying floor topping, but before float finishing.

C. Begin curing immediately after finishing concrete floor topping. Cure by one or a combination of the following methods, according to concrete floor topping manufacturer's written instructions:

1. Moisture Curing: Keep surfaces continuously moist for not less than seven days with [**water**] [**continuous water-fog spray**] [**or**] [**absorptive cover, water saturated and kept continuously wet. Cover topping surfaces and edges with** 12-inch300-mm **lap over adjacent absorptive covers**].
2. Moisture-Retaining-Cover Curing: Cover concrete surfaces with moisture-retaining cover for curing concrete, placed in widest practicable width, with sides and ends lapped at least 12 inches300 mm, and sealed by waterproof tape or adhesive. Cure for not less than seven days. Immediately repair any holes or tears during curing period, using cover material and waterproof tape.

3.5 REPAIR

A. Defective Topping: Repair and patch defective concrete floor topping areas, including areas that have not bonded to concrete substrate.

3.6 FIELD QUALITY CONTROL

A. Testing Services: Testing and inspecting of completed applications of concrete floor toppings shall take place in successive stages, in areas of extent and using methods as follows:

1. Sample Sets: At point of placement, a set of three molded-cube samples shall be taken from the topping mix for the first 1000 sq. ft.93 sq. m, plus one set of samples for each subsequent 5000 sq. ft.464 sq. m of topping, or fraction thereof, but not less than six samples for each day's placement. Samples shall be tested according to ASTM C 109/C 109M for compliance with compressive-strength requirements.
2. Concrete floor topping shall be tested for delamination by dragging a steel chain over the surface.
3. Concrete floor topping shall be tested for compliance with surface flatness and levelness tolerances.

B. Remove and replace applications of concrete floor topping where test results indicate that it does not comply with specified requirements.

C. Additional testing and inspecting, at Contractor's expense, will be performed to determine compliance of replaced or additional work with specified requirements.

END OF SECTION 035300

SECTION 04 2000 - UNIT MASONRY

PART 1 - GENERAL

1.1 RELATED DOCUMENTS

A. Drawings and general provisions of the Contract, including General and Supplementary Conditions and Division 01 Specification Sections, apply to this Section.

1.2 SUMMARY

A. Section Includes:

1. Concrete masonry units.
2. Clay Face brick.
3. Mortar and grout.
4. Steel reinforcing bars.
5. Masonry joint reinforcement.
6. Ties and anchors.
7. Embedded flashing.
8. Miscellaneous masonry accessories.

B. Related Sections include the following:

1. Division 03 Section "Cast-in-Place Concrete" for installing dovetail slots for masonry anchors.
2. Division 05 Section "Structural Steel Framing" for installing anchor sections of adjustable masonry anchors for connecting to structural steel frame.
3. Division 07 Section "Sheet Metal Flashing and Trim" for exposed sheet metal flashing and for furnishing manufactured reglets installed in masonry joints.
4. Division 07 Section “Thermal Insulation” for materials and installation methods for insulation installed in association with masonry walls.
5. Division 07 Section “Fluid-Applied Membrane Air Barrier” for materials and installation methods for air barrier membrane system located in the non-accessible part of the wall.
6. Division 07 Section "Sheet Metal Flashing and Trim" for exposed sheet metal flashing.
7. Division 07 Section "Penetration Fire-stopping" for fire-stopping at openings in masonry walls.
8. Division 07 Section "Joint Sealants" for sealing control and expansion joints in unit masonry.

C. Products installed, but not furnished, under this Section include the following:

1. Steel lintels for unit masonry, furnished under Division 05 Section "Metal Fabrications."

1.3 DEFINITIONS

A. CMU(s): Concrete masonry unit(s).

B. Reinforced Masonry: Masonry containing reinforcing steel in grouted cells.

1.4 PRECONSTRUCTION TESTING

A. Preconstruction Testing Service: Contractor will engage a qualified independent testing agency to perform preconstruction testing indicated below. Retesting of materials that fail to comply with specified requirements shall be done at Contractor's expense.

1. Concrete Masonry Unit Test: For each type of unit required, according to ASTM C 140 for compressive strength.
2. Mortar Test (Property Specification): For each mix required, according to ASTM C 109/C 109M for compressive strength, ASTM C 1506 for water retention, and ASTM C 91 for air content.
3. Mortar Test (Property Specification): For each mix required, according to ASTM C 780 for compressive strength.
4. Grout Test (Compressive Strength): For each mix required, according to ASTM C 1019.
5. Prism Test: For each type of construction required, according to ASTM C 1314.

1.5 ACTION SUBMITTALS

A. Product Data: For each type of product indicated.

B. Shop Drawings: For the following:

1. Reinforcing Steel: Detail bending and placement of unit masonry reinforcing bars. Comply with ACI 315, "Details and Detailing of Concrete Reinforcement." Show elevations of reinforced walls.
2. Stone Trim Units: Show sizes, profiles, and locations of each stone trim unit required.
3. Reinforcing Steel: Detail bending and placement of unit masonry reinforcing bars. Comply with ACI 315, "Details and Detailing of Concrete Reinforcement." Show elevations of reinforced walls

C. Samples for Initial Selection:
1. Face brick.
2. Weep holes/vents.

1.6 INFORMATIONAL SUBMITTALS

A. List of Materials Used in Constructing Mockups: List generic product names together with manufacturers, manufacturers' product names, model numbers, lot numbers, batch numbers, source of supply, and other information as required to identify materials used. Include mix proportions for mortar and grout and source of aggregates.

1. Submittal is for information only. Neither receipt of list nor approval of mockup constitutes approval of deviations from the Contract Documents unless such deviations are specifically brought to the attention of Architect and approved in writing.

B. Qualification Data: For testing agency.

C. Material Certificates: For each type and size of the following:

1. Masonry units.

a. Include material test reports substantiating compliance with requirements.

b. For brick, include size-variation data verifying that actual range of sizes falls within specified tolerances.
c. For exposed brick, include test report for efflorescence according to ASTM C 67.
d. For exposed brick, include test report for efflorescence according to ASTM C 67.
e. For masonry units used in structural masonry, include data and calculations establishing average net-area compressive strength of units.

2. Cementitious materials. Include brand, type, and name of manufacturer.
3. Pre-blended, dry mortar mixes. Include description of type and proportions of ingredients.
4. Grout mixes. Include description of type and proportions of ingredients.
5. Reinforcing bars.
6. Joint reinforcement.
7. Anchors, ties, and metal accessories.

D. Mix Designs: For each type of mortar and grout. Include description of type and proportions of ingredients.
1. Include test reports for mortar mixes required to comply with property specification. Test according to ASTM C 109/C 109M for compressive strength, ASTM C 1506 for water retention, and ASTM C 91 for air content.
2. Include test reports, according to ASTM C 1019, for grout mixes required to comply with compressive strength requirement.

E. Statement of Compressive Strength of Masonry: For each combination of masonry unit type and mortar type, provide statement of average net-area compressive strength of masonry units, mortar type, and resulting net-area compressive strength of masonry determined according to Tables 1 and 2 in ACI 530.1/ASCE 6/TMS 602.

F. Cold-Weather and Hot-Weather Procedures: Detailed description of methods, materials, and equipment to be used to comply with requirements.

1.7 QUALITY ASSURANCE

A. Testing Agency Qualifications: Qualified according to ASTM C 1093 for testing indicated.

B. Source Limitations for Masonry Units: Obtain exposed masonry units of a uniform texture and color, or a uniform blend within the ranges accepted for these characteristics, from single source from single manufacturer for each product required.

C. Source Limitations for Mortar Materials: Obtain mortar ingredients of a uniform quality, including color for exposed masonry, from single manufacturer for each cementitious component and from single source or producer for each aggregate.

D. Masonry Standard: Comply with ACI 530.1/ASCE 6/TMS 602 unless modified by requirements in the Contract Documents.

E. Mockups: Build mockups to verify selections made under sample submittals and to demonstrate aesthetic effects, conditions for grouting applications and set quality standards for materials and execution.

1. Build mockups for typical exterior wall in sizes approximately 48 inches (1200 mm) long by 48 inches (1200 mm) high by full thickness, including face and backup wythes and accessories.

a. Include a sealant-filled joint at least 16 inches (400 mm) long in each mockup.
b. Include lower corner of window opening at upper corner of exterior wall mockup. Make opening approximately 12 inches (300 mm) wide by 16 inches (400 mm) high.
c. Include through-wall flashing installed for a 24-inch (600-mm) length in corner of exterior wall mockup approximately 16 inches (400 mm) down from top of mockup, with a 12-inch (300-mm) length of flashing left exposed to view (omit masonry above half of flashing).
d. Include air barrier, veneer anchors, flashing, cavity drainage material, and weep holes in exterior masonry-veneer wall mockup.
e. Approval of mockups is for color, texture, and blending of masonry units; relationship of mortar and sealant colors to masonry unit colors; tooling of joints; and aesthetic qualities of workmanship.
f. Approval of mockups does not constitute approval of deviations from the Contract Documents contained in mockups unless such deviations are specifically approved by Architect in writing.

2. Build mockups of sufficient size to show all conditions that will affect determinations for each grouting application including:

a. Mortared joints, grout lift height, grout pour height, use of fine and course grout for each masonry unit thickness, cell configuration and dimension.
b. Horizontal wire reinforcing, masonry anchors and ties entering masonry unit cells, all vertical and horizontal steel bare reinforcing and embedded dowels, anticipated mortar from joints projecting into cells to be grouted.
c. Electrical and plumbing items to be built into masonry cells.
d. The anticipated type and size of mechanical vibrating equipment to be used for grout placement.

3. Clean one-half of exposed faces of mockups with masonry cleaner as indicated.
4. Protect accepted mockups from the elements with weather-resistant membrane.

F. Mockups and Pre-installation Conference:

1. Conduct conference at Project site to comply with requirements in Division 01 Section "Project Management and Coordination."
2. The conference shall be attended by the Contractor’s Project Manager and Field Superintendent, Architect, Structural Engineer, Contractor’s Special Inspector, Owner’s Representative, and Kansas Department of Facilities Management designated inspector
3. For each grouting application, make written record of each of the particular and most stringent conditions that determinations will be based upon to comply with the building codes. Produce sketched and/or photographs to document the conditions of each grouting application.
4. The architect and Structural Engineer will issue an Architect’s Supplemental Instruction no less than 5 days prior to scheduled grouting to document each particular grouted masonry application and its conditions, as for limitations of pour height, lift height, and type of grout.
5. Approval of mockups is for color, texture, and blending of masonry units; relationship of mortar and sealant colors to masonry unit colors; tooling of joints; and aesthetic qualities of workmanship.

a. Approval of mockups is also for other material and construction qualities specifically approved by Architect in writing.
b. Approval of mockups does not constitute approval of deviations from the Contract Documents contained in mockups unless such deviations are specifically approved by Architect in writing.

6. Approved mockups may become part of the completed Work if undisturbed at time of Final Completion.

1.8 DELIVERY, STORAGE, AND HANDLING

A. Store masonry units on elevated platforms in a dry location. If units are not stored in an enclosed location, cover tops and sides of stacks with waterproof sheeting, securely tied. If units become wet, do not install until they are dry.

B. Store cementitious materials on elevated platforms, under cover, and in a dry location. Do not use cementitious materials that have become damp.

C. Store aggregates where grading and other required characteristics can be maintained and contamination avoided.

D. Deliver pre-blended, dry mortar mix in moisture-resistant containers designed for use with dispensing silos. Store pre-blended, dry mortar mix in delivery containers on elevated platforms, under cover, and in a dry location or in covered weatherproof dispensing silos.

E. Store masonry accessories, including metal items, to prevent corrosion and accumulation of dirt and oil.

1.9 PROJECT CONDITIONS

A. Protection of Masonry: During construction, cover tops of walls, projections, and sills with waterproof sheeting at end of each day's work. Cover partially completed masonry when construction is not in progress.

1. Extend cover a minimum of 24 inches (600 mm) down both sides of walls and hold cover securely in place.
2. Where one wythe of multi-wythe masonry walls is completed in advance of other wythes, secure cover a minimum of 24 inches (600 mm) down face next to unconstructed wythe and hold cover in place.

B. Do not apply uniform floor or roof loads for at least 12 hours and concentrated loads for at least three days after building masonry walls or columns.

C. Stain Prevention: Prevent grout, mortar, and soil from staining the face of masonry to be left exposed or painted. Immediately remove grout, mortar, and soil that come in contact with such masonry.

1. Protect base of walls from rain-splashed mud and from mortar splatter by spreading coverings on ground and over wall surface.
2. Protect sills, ledges, and projections from mortar droppings.
3. Protect surfaces of window and door frames, as well as similar products with painted and integral finishes, from mortar droppings.
4. Turn scaffold boards near the wall on edge at the end of each day to prevent rain from splashing mortar and dirt onto completed masonry.

D. Cold-Weather Requirements: Do not use frozen materials or materials mixed or coated with ice or frost. Do not build on frozen substrates. Remove and replace unit masonry damaged by frost or by freezing conditions. Comply with cold-weather construction requirements contained in ACI 530.1/ASCE 6/TMS 602.

1. Cold-Weather Cleaning: Use liquid cleaning methods only when air temperature is 40 deg F (4 deg C) and higher and will remain so until masonry has dried, but not less than seven days after completing cleaning.

E. Hot-Weather Requirements: Comply with hot-weather construction requirements contained in ACI 530.1/ASCE 6/TMS 602.

PART 2 - PRODUCTS

2.1 MASONRY UNITS, GENERAL

A. Defective Units: Referenced masonry unit standards may allow a certain percentage of units to contain chips, cracks, or other defects exceeding limits stated in the standard. Do not use units where such defects will be exposed in the completed Work.

B. Fire-Resistance Ratings: Where indicated, provide units that comply with requirements for fire-resistance ratings indicated as determined by testing according to ASTM E 119, by equivalent masonry thickness, or by other means, as acceptable to authorities having jurisdiction.

2.2 CONCRETE MASONRY UNITS

A. Shapes: Provide shapes indicated and as follows, with exposed surfaces matching exposed faces of adjacent units unless otherwise indicated.

1. Provide special shapes for lintels, corners, jambs, sashes, movement joints, headers, bonding, and other special conditions.
2. Provide bullnose units for outside corners unless otherwise indicated.

a. Provide bullnose units for both standard CMU and decorative CMU.

B. CMUs: ASTM C 90.

1. Unit Compressive Strength: Provide units with minimum average net-area compressive strength of 2150 psi (14.8 MPa).
2. Density Classification: Lightweight unless otherwise indicated.
3. Size (Width): Manufactured to dimensions 3/8 inch less than nominal dimensions.

2.3 MASONRY LINTELS

A. Masonry Lintels: Built-in-place masonry lintels made from bond beam CMUs with reinforcing bars placed as indicated and filled with coarse grout. Cure precast lintels before handling and installing. Temporarily support built-in-place lintels until cured.

2.4 BRICK

A. General: Provide shapes indicated and as follows, with exposed surfaces matching finish and color of exposed faces of adjacent units:

1. For ends of sills and caps and for similar applications that would otherwise expose unfinished brick surfaces, provide units without cores or frogs and with exposed surfaces finished.
2. Provide special shapes for applications where stretcher units cannot accommodate special conditions, including those at corners, movement joints, bond beams, sashes, and lintels.
3. Provide special shapes for applications requiring brick of size, form, color, and texture on exposed surfaces that cannot be produced by sawing.
4. Provide special shapes for applications where shapes produced by sawing would result in sawed surfaces being exposed to view.

B. Face Brick: Facing brick complying with ASTM C 216.

1. Products: Subject to compliance with requirements, provide product by one of the following:

   a. Grey Granite; Cloud Ceramics.
   b. Match Grey Granite; Endicott.

2. Grade: SW.
3. Type: FBX.
4. Initial Rate of Absorption: Less than 14 g/30 sq. in. (14 g/194 sq. cm) per minute when tested per ASTM C 67.
5. Efflorescence: Provide brick that has been tested according to ASTM C 67 and is rated "not effloresced."
6. Size (Actual Dimensions): 3-5/8 inches (92 mm) wide by 3-5/8 inches (92 mm) high by 7-5/8 inches (295 mm) long.
7. Application: Use where brick is exposed unless otherwise indicated.

2.5 MORTAR AND GROUT MATERIALS

A. Portland Cement: ASTM C 150, Type I or II, except Type III may be used for cold-weather construction. Provide natural color or white cement as required to produce mortar color indicated.

B. Hydrated Lime: ASTM C 207, Type S.

C. Portland Cement-Lime Mix: Packaged blend of Portland Cement and hydrated lime containing no other ingredients.

D. Aggregate for Mortar: ASTM C 144.

E. Aggregate for Grout: ASTM C 404.

F. Cold-Weather Admixture: Nonchloride, noncorrosive, accelerating admixture complying with ASTM C 494/C 494M, Type C, and recommended by manufacturer for use in masonry mortar of composition indicated.

1. Products: Subject to compliance with requirements, provide one of the following:

   a. Euclid Chemical Company (The); Accelguard 80.
   b. Grace Construction Products, W. R. Grace & Co. - Conn.; Morset.
   c. Sonneborn Products, BASF Aktiengesellschaft; Trimix-NCA.

G. Water: Potable.

H. Water-Repellent Admixture: Liquid water-repellent mortar admixture intended for use with concrete masonry units, containing integral water repellent be same manufacturer.

2.6 REINFORCEMENT

A. Uncoated Steel Reinforcing Bars: ASTM A 615/A 615M or ASTM A 996/A 996M, Grade 60 (Grade 420).

B. Masonry Joint Reinforcement, General: ASTM A 951/A 951M.

1. Interior Walls: Hot-dip galvanized, carbon steel.
2. Exterior Walls: Hot-dip galvanized, carbon steel.
3. Wire Size for Side Rods: 0. 187 inch diameter.
4. Wire Size for Cross Rods: 0. 187 inch diameter.
5. Wire Size for Veneer Ties: 0.187-inch diameter.
6. Spacing of Cross Rods, Tabs, and Cross Ties: Not more than 16 inches (407 mm) O.C.
7. Provide in lengths of not less than 10 feet (3 m), with prefabricated corner and tee units.

C. Masonry Joint Reinforcement for Single-Wythe Masonry: Either ladder or truss type with single pair of side rods and cross rods spaced not more than 16 inches (407mm) O.C.

2.7 TIES AND ANCHORS

A. Materials: Provide ties and anchors specified in this article that are made from materials that comply with the following unless otherwise indicated.

1. Hot-Dip Galvanized, Carbon-Steel Wire: ASTM A 82/A 82M; with ASTM A 153/A 153M, Class B-2 coating.
2. Galvanized Steel Sheet: ASTM A 653/A 653M, Commercial Steel, G60 (Z180) zinc coating.
3. Steel Sheet, Galvanized after Fabrication: ASTM A 1008/A 1008M, Commercial Steel, with ASTM A 153/A 153M, Class B coating.
4. Steel Plates, Shapes, and Bars: ASTM A 36/A 36M.

B. Wire Ties, General: Unless otherwise indicated, size wire ties to extend at least halfway through veneer but with at least 5/8-inch (16-mm) cover on outside face. Outer ends of wires are bent 90 degrees and extend 2 inches (50 mm) parallel to face of veneer.

C. Individual Wire Ties: Rectangular units with closed ends and not less than 4 inches (100 mm) wide.

1. Z-shaped ties with ends bent 90 degrees to provide hooks not less than 2 inches (50 mm) long may be used for masonry constructed from solid units.
2. Where wythes do not align or are of different materials, use adjustable ties with pintle-and-eye connections having a maximum adjustment of 1-1/4 inches (32 mm).
3. Wire: Fabricate from 3/16-inch- (4.76-mm-)] diameter, hot-dip galvanized steel wire.

D. Rigid Anchors: Fabricate from steel bars 1-1/2 inches 38 mm wide by 1/4 inch 6.35 mm thick by 24 inches 610 mm long, with ends turned up 2 inches 51 mm or with cross pins bent to configuration indicated.
1. Corrosion Protection: Hot-dip galvanized to comply with ASTM A 153/A 153M.

2.8 MISCELLANEOUS ANCHORS

A. Unit Type Inserts in Concrete: Cast-iron or malleable-iron wedge-type inserts.

B. Anchor Bolts: Headed steel bolts complying with ASTM A 307, Grade AASTM F 568M, Property Class 4.6; with ASTM A 563 ASTM A 563M hex nuts and, where indicated, flat washers; hot-dip galvanized to comply with ASTM A 153/A 153M, Class C; of dimensions indicated.

C. Post-installed Anchors: Torque-controlled expansion anchors.
1. Load Capacity: Capable of sustaining, without failure, a load equal to six times the load imposed when installed in unit masonry and four times the load imposed when installed in concrete, as determined by testing according to ASTM E 488, conducted by a qualified independent testing agency.
2. Material for Interior Locations: Carbon-steel components zinc plated to comply with ASTM B 633 or ASTM F 1941ASTM F 1941M, Class Fe/Zn 5 unless otherwise indicated.
3. Material for Exterior Locations and Where Stainless Steel Is Indicated: Alloy Group 1A1or 2A4 stainless-steel bolts, ASTM F 593ASTM F 738M, and nuts, ASTM F 594ASTM F 836M.

2.9 EMBEDDED FLASHING MATERIALS

A. Flexible Flashing: For flashing not exposed to the exterior, use the following unless otherwise indicated:

1. Rubberized-Asphalt Flashing: Composite flashing product consisting of a pliable, adhesive rubberized-asphalt compound, bonded to a high-density, cross-laminated polyethylene film to produce an overall thickness of not less than 0.040 inch (1.02 mm).

a. Products: Subject to compliance with requirements, provide one of the following:

1) Carlisle Coatings & Waterproofing; CCW-705-TWF Thru-Wall Flashing.
2) Dayton Superior Corporation, Dur-O-Wal Division; Dur-O-Barrier Thru-Wall Flashing.
3) Grace Construction Products, W. R. Grace & Co. - Conn.; Perm-A-Barrier Wall Flashing.

b. Accessories: Provide preformed corners, end dams, other special shapes, and seaming materials produced by flashing manufacturer.

B. Application: Unless otherwise indicated, use the following:

1. Where flashing is fully concealed, use flexible flashing.

C. Adhesives, Primers, and Seam Tapes for Flashings: Flashing manufacturer's standard products or products recommended by flashing manufacturer for bonding flashing sheets to each other and to substrates.

2.10 MISCELLANEOUS MASONRY ACCESSORIES

A. Compressible Filler: Premolded filler strips complying with ASTM D 1056, Grade 2A1; compressible up to 35 percent; of width and thickness indicated; formulated from neoprene, urethane or PVC.

B. Preformed Control-Joint Gaskets: Made from styrene-butadiene-rubber compound, complying with ASTM D 2000, Designation M2AA-805 and designed to fit standard sash block and to maintain lateral stability in masonry wall; size and configuration as indicated.

C. Bond-Breaker Strips: Asphalt-saturated, organic roofing felt complying with ASTM D 226, Type I (No. 15 asphalt felt).

D. Reinforcing Bar Positioners: Wire units designed to fit into mortar bed joints spanning masonry unit cells and hold reinforcing bars in center of cells. Units are formed from 0.148-inch (3.77-mm) steel wire, hot-dip galvanized after fabrication. Provide units designed for number of bars indicated.

E. Weep/Vent Products: Use the following unless otherwise indicated:

1. Cellular Plastic Weep/Vent: One-piece, flexible extrusion made from UV-resistant polypropylene copolymer, full height and width of head joint and depth 1/8 inch (3 mm) less than depth of outer wythe, in color selected from manufacturer's standard.

a. Products: Subject to compliance with requirements, provide one of the following:

1) Dayton Superior Corporation, Dur-O-Wal Division; Cell Vents.
2) Heckmann Building Products Inc.; No. 85 Cell Vent.
3) Hohmann & Barnard, Inc.; Quadro-Vent.

F. Cavity Drainage Material: Free-draining mesh, made from polymer strands that will not degrade within the wall cavity.

1. Products: Subject to compliance with requirements, provide one of the following:

a. Mortar Net USA, Ltd.; Mortar Net.

2. Provide one of the following configurations:

a. Strips, full-depth of cavity and 10 inches (250 mm) high, with dovetail shaped notches 7 inches (175 mm) deep that prevent clogging with mortar droppings.

G. Termination Bar: Stainless-steel bars Type 304; 24 gage by 1 inch wide double-winged style, with 1/4-inch long 45 degree angled wings top and bottom, and with 1/4-inch diameter predrilled holes at 8-inch centers for 3/16-inch diameter screws. Attached with drive pin.

a. Product:
1) T-3; Hohmann & Barnard, Inc. (Special Order)
2) Firestone Building Products: W56RAC3061.

H. Drip Edge: Drip Edge Flashing, Type 304 Stainless steel; 24 gage by 1 1/2 wide, with 45 degree, 3/8 inch closed hem edge.Provide with preformed inside and outside corners.

a. Product:
1) Wire-Bond; #4156 Drip Edge Flashing
2) Hohmann & Barnard, Inc; DP
3) Dayton Superior Corporation, Dur-O-Wal Division; DA1525.

2.11 MORTAR AND GROUT MIXES

A. General: Do not use admixtures, including pigments, air-entraining agents, accelerators, retarders, water-repellent agents, antifreeze compounds, or other admixtures, unless otherwise indicated.
   1. Do not use calcium chloride in mortar or grout.
   2. Add cold-weather admixture (if used) at same rate for all mortar that will be exposed to view, regardless of weather conditions, to ensure that mortar color is consistent.

B. Mortar for Unit Masonry: Comply with ASTM C 270, Proportion Specification. Provide the following types of mortar for applications stated unless another type is indicated[or needed to provide required compressive strength of masonry].
   1. For masonry below grade or in contact with earth, Type S.
   2. For reinforced masonry, use Type N.

C. Grout for Unit Masonry: Comply with ASTM C 476.
   1. Use grout of type indicated or, if not otherwise indicated, of type (fine or coarse) that will comply with Table 1.15.1 in ACI 530.1/ASCE 6/TMS 602 for dimensions of grout spaces and pour height.
   2. Provide grout with a slump of 8 to 11 inches203 to 279 mm as measured according to ASTM C 143/C 143M.

2.12 MASONRY CLEANERS

A. General: Manufacturer's proprietary standard-strength cleaner designed for removing mortar/grout stains, efflorescence, and other new construction stains from new masonry without discoloring or damaging masonry surfaces. Use product expressly approved for intended use by cleaner manufacturer and manufacturer of masonry units being cleaned.

   1. Manufacturers: Subject to compliance with requirements, provide products by one of the following:

      a. Diedrich Technologies, Inc.
      b. EaCo Chem, Inc.
      c. ProSoCo, Inc.

   2. CMUs and Brick Masonry Cleaner:

      a. Diedrich Technologies; 202 Vana-Stop New Masonry Cleaner.
      b. EaCo Chem; NMD 80 Detergent Masonry Cleaner.
      c. ProSoCo; 600 Detergent Masonry Cleaner.

   3. Decorative CMUs (Ground Faced Block):

      a. Diedrich Technologies; 222 Concrete Brick and Burnished Masonry Clenzer.
      b. EaCo Chem; NMD 80 Detergent Masonry Cleaner.
      c. ProSoCo; Burnished Custom Masonry Cleaner.

   4. Use grout of type indicated or, if not otherwise indicated, of type (fine or coarse) that will comply with Table 1.15.1 in ACI 530.1/ASCE 6/TMS 602 for dimensions of grout spaces and pour height.

PART 3 - EXECUTION

3.1 EXAMINATION

A. Examine conditions, with Installer present, for compliance with requirements for installation tolerances and other conditions affecting performance of the Work.

1. For the record, prepare written report, endorsed by Installer, listing conditions detrimental to performance of work.
2. Verify that foundations are within tolerances specified.
3. Verify that reinforcing dowels are properly placed.

B. Before installation, examine rough-in and built-in construction for piping systems to verify actual locations of piping connections.

C. Proceed with installation only after unsatisfactory conditions have been corrected.

3.2 INSTALLATION, GENERAL

A. Thickness: Build cavity and composite walls and other masonry construction to full thickness shown. Build single-wythe walls to actual widths of masonry units, using units of widths indicated.

B. Build chases and recesses to accommodate items specified in this and other Sections.

C. Leave openings for equipment to be installed before completing masonry. After installing equipment, complete masonry to match the construction immediately adjacent to opening.

D. Use full-size units without cutting if possible. If cutting is required to provide a continuous pattern or to fit adjoining construction, cut units with motor-driven saws; provide clean, sharp, unchipped edges. Allow units to dry before laying unless wetting of units is specified. Install cut units with cut surfaces and, where possible, cut edges concealed.

E. Select and arrange units for exposed unit masonry to produce a uniform blend of colors and textures.

1. Mix units from several pallets or cubes as they are placed.

F. Wetting of Brick: Wet brick before laying if initial rate of absorption exceeds 30 g/30 sq. in. (30 g/194 sq. cm) per minute when tested per ASTM C 67. Allow units to absorb water so they are damp but not wet at time of laying.

3.3 TOLERANCES

A. Lines and Levels:
1. For conspicuous horizontal lines, such as lintels, sills, parapets, and reveals, do not vary from level by more than 1/4 inch in 20 feet6 mm in 6 m, or 1/2 inch 12 mm maximum.
2. For conspicuous vertical lines, such as external corners, door jambs, reveals, and expansion and control joints, do not vary from plumb by more than 1/4 inch in 20 feet6 mm in 6 m, or 1/2 inch 12 mm maximum.
3. For vertical alignment of exposed head joints, do not vary from plumb by more than 1/4 inch in 10 feet6 mm in 3 m, or 1/2 inch 12 mm maximum.

B. Joints:
1. For exposed bed joints, do not vary from thickness indicated by more than plus or minus 1/8 inch3 mm, with a maximum thickness limited to 1/2 inch12 mm.
2. For exposed head joints, do not vary from thickness indicated by more than plus or minus 1/8 inch3 mm. Do not vary from adjacent bed-joint and head-joint thicknesses by more than 1/8 inch3 mm.

3.4 LAYING MASONRY WALLS

A. Lay out walls in advance for accurate spacing of surface bond patterns with uniform joint thicknesses and for accurate location of openings, movement-type joints, returns, and offsets. Avoid using less-than-half-size units, particularly at corners, jambs, and, where possible, at other locations.

B. Bond Pattern for Exposed Masonry: Unless otherwise indicated, lay exposed concrete masonry units in running bond and exposed brick units in one-third running bond; do not use units with less than nominal 4-inch (100-mm) horizontal face dimensions at corners or jambs.

C. Lay concealed masonry with all units in a wythe in running bond or bonded by lapping not less than 2 inches (50 mm). Bond and interlock each course of each wythe at corners. Do not use units with less than nominal 4-inch (100-mm) horizontal face dimensions at corners or jambs.

D. Stopping and Resuming Work: Stop work by racking back units in each course from those in course below; do not tooth. When resuming work, clean masonry surfaces that are to receive mortar, remove loose masonry units and mortar, and wet brick if required before laying fresh masonry.

E. Built-in Work: As construction progresses, build in items specified in this and other Sections. Fill in solidly with masonry around built-in items.

F. Fill space between steel frames and masonry solidly with mortar unless otherwise indicated.

G. Where built-in items are to be embedded in cores of hollow masonry units, place a layer of metal lath, wire mesh, or plastic mesh in the joint below and rod mortar or grout into core.

H. Fill cores in hollow CMUs with grout 24 inches (600 mm) under bearing plates, beams, lintels, posts, and similar items unless otherwise indicated.

I. Build non-load-bearing interior partitions full height of story to underside of solid floor or roof structure above unless otherwise indicated.

1. Install compressible filler in joint between top of partition and underside of structure above.
2. At fire-rated partitions, treat joint between top of partition and underside of structure above to comply with Division 07 Section "Fire-Resistive Joint Systems."

3.5 MORTAR BEDDING AND JOINTING

A. Lay hollow CMUs as follows:

1. With face shells fully bedded in mortar and with head joints of depth equal to bed joints.
2. With webs fully bedded in mortar in all courses of piers, columns, and pilasters.

3. With webs fully bedded in mortar in grouted masonry, including starting course on footings.
4. With entire units, including areas under cells, fully bedded in mortar at starting course on footings where cells are not grouted.

B. Tool exposed joints slightly concave when thumbprint hard, using a jointer larger than joint thickness unless otherwise indicated.

C. Cut joints flush for masonry walls to receive plaster or other direct-applied finishes (other than paint) unless otherwise indicated.

3.6 MASONRY JOINT REINFORCEMENT

A. General: Install entire length of longitudinal side rods in mortar with a minimum cover of 5/8 inch (16 mm) on exterior side of walls, 1/2 inch (13 mm) elsewhere. Lap reinforcement a minimum of 6 inches (150 mm).

1. Space reinforcement not more than 16 inches (406 mm) o.c.

B. Interrupt joint reinforcement at control and expansion joints unless otherwise indicated.

C. Provide continuity at wall intersections by using prefabricated T-shaped units.

D. Provide continuity at corners by using prefabricated L-shaped units.

E. Cut and bend reinforcing units as directed by manufacturer for continuity at corners, returns, offsets, column fireproofing, pipe enclosures, and other special conditions.

3.7 CONTROL AND EXPANSION JOINTS

A. General: Install control and expansion joint materials in unit masonry as masonry progresses. Do not allow materials to span control and expansion joints without provision to allow for in-plane wall or partition movement.

B. Form control joints in concrete masonry as follows:

1. Install preformed control-joint gaskets designed to fit standard sash block.

C. Form expansion joints in brick as follows:

1. Form open joint full depth of brick wythe and of width indicated, but not less than [3/8 inch (10 mm)] for installation of sealant and backer rod specified in Division 07 Section "Joint Sealants."

3.8 LINTELS

A. Install steel lintels where indicated.

B. Provide masonry lintels where shown and where openings of more than 12 inches (305 mm) for brick-size units and 24 inches (610 mm) for block-size units are shown without structural steel or other supporting lintels.

C. Provide minimum bearing of 8 inches (200 mm) at each jamb unless otherwise indicated.

3.9 FLASHING, WEEP HOLES, CAVITY DRAINAGE, AND VENTS

A. General: Install embedded flashing and weep holes in masonry at shelf angles, lintels, ledges, other obstructions to downward flow of water in wall, and where indicated.

B. Install flashing as follows, unless otherwise indicated:

1. Prepare masonry surfaces so they are smooth and free from projections that could puncture flashing. Where flashing is within mortar joint, place through-wall flashing on sloping bed of mortar. Before covering with mortar, seal penetrations in flashing with adhesive, sealant, or tape as recommended by flashing manufacturer.
   a. At cavity walls, extend flashing from within 1/2 inch of exterior face of outer wythe of masonry, through outer wythe, turned up minimum of 15 inches (200mm), and secure to sheathing or concrete backup with termination bar secured at 8 inches O.C.
   b. At lintels and shelf angles, extend flashing a minimum of 4 inches (150 mm) into masonry at each end. At heads and sills, extend flashing 4 inches (150 mm) at ends and turn up not less than 2 inches (50 mm) to form end dams.
      1) At base of cavity walls, all lintels and shelf angles, provide stainless steel drip edge.
      2) Prime stainless steel just prior to installing through-wall flashing.

C. Install weep holes in head joints in exterior wythes of first course of masonry immediately above embedded flashing and as follows:

1. Use specified weep/vent products to form weep holes.
2. Space weep holes 24 inches (600 mm) O.C. unless otherwise indicated.

D. Place cavity drainage material in cavities to comply with configuration requirements for cavity drainage material in "Miscellaneous Masonry Accessories" Article.

3.10 REINFORCED UNIT MASONRY INSTALLATION

A. Temporary Formwork and Shores: Construct formwork and shores as needed to support reinforced masonry elements during construction.

1. Construct formwork to provide shape, line, and dimensions of completed masonry as indicated. Make forms sufficiently tight to prevent leakage of mortar and grout. Brace, tie, and support forms to maintain position and shape during construction and curing of reinforced masonry.
2. Do not remove forms and shores until reinforced masonry members have hardened sufficiently to carry their own weight and other loads that may be placed on them during construction.

B. Placing Reinforcement: Comply with requirements in ACI 530.1/ASCE 6/TMS 602.

C. Grouting: Do not place grout until entire height of masonry to be grouted has attained enough strength to resist grout pressure.

1. Comply with requirements in ACI 530.1/ASCE 6/TMS 602 for cleanouts and for grout placement, including minimum grout space and maximum pour height.

3.11 FIELD QUALITY CONTROL

A. Allow inspectors access to scaffolding and work areas, as needed to perform tests and inspections. Retesting of materials that fail to comply with specified requirements shall be done at Contractor's expense.

B. Testing and Inspecting: Owner will engage special inspectors to perform tests and inspections and prepare reports. Allow inspectors access to scaffolding and work areas, as needed to perform tests and inspections. Retesting of materials that fail to comply with specified requirements shall be done at Contractor's expense.

C. Inspections: Level 1 special inspections according to the "International Building Code."

D. Testing Frequency: One set of tests for each 5000 sq. ft. 464 sq. m of wall area or portion thereof.

E. Mortar Aggregate Ratio Test (Proportion Specification): For each mix provided, according to ASTM C 780.

F. Grout Test (Compressive Strength): For each mix provided, according to ASTM C 1019.

3.12 REPAIRING, POINTING, AND CLEANING

A. Remove and replace masonry units that are loose, chipped, broken, stained, or otherwise damaged or that do not match adjoining units. Install new units to match adjoining units; install in fresh mortar, pointed to eliminate evidence of replacement.

B. Pointing: During the tooling of joints, enlarge voids and holes, except weep holes, and completely fill with mortar. Point up joints, including corners, openings, and adjacent construction, to provide a neat, uniform appearance. Prepare joints for sealant application, where indicated.

C. In-Progress Cleaning: Clean unit masonry as work progresses by dry brushing to remove mortar fins and smears before tooling joints.

D. Final Cleaning: After mortar is thoroughly set and cured, clean exposed masonry as follows:

1. Remove large mortar particles by hand with wooden paddles and nonmetallic scrape hoes or chisels.
2. Test cleaning methods on sample wall panel; leave one-half of panel un-cleaned for comparison purposes. Obtain Architect's approval of sample cleaning before proceeding with cleaning of masonry.
3. Protect adjacent stone and non-masonry surfaces from contact with cleaner by covering them with liquid strippable masking agent or polyethylene film and waterproof masking tape.
4. Wet wall surfaces with water before applying cleaners; remove cleaners promptly by rinsing surfaces thoroughly with clear water. Do not use power sprayers.
5. Clean brick by bucket-and-brush hand-cleaning method described in BIA Technical Notes 20.
6. Clean masonry with a proprietary cleaner specified, applied according to manufacturer's written instructions.
7. Clean concrete masonry by cleaning method indicated in NCMA TEK 8-2A applicable to type of stain on exposed surfaces.

3.13 MASONRY WASTE DISPOSAL

A. Excess masonry materials and masonry waste are Contractor's property. At completion of unit masonry work, remove from Project site.

END OF SECTION 04 2000

SECTION 044200 - EXTERIOR STONE CLADDING

PART 1 - GENERAL

1.1 RELATED DOCUMENTS

A. Drawings and general provisions of the Contract, including General and Supplementary Conditions and Division 01 Specification Sections, apply to this Section.

1.2 SUMMARY

A. This Section includes the following types of dimension stone:

1. Panels set with individual anchors.
2. Trim units, including copings, belt courses and sills.

B. Related Sections include the following:

1. Division 04 Section "Unit Masonry" for masonry accessories not specified herein, including but not limited to, through-wall flashing, cavity drainage material and weeps.
2. Division 05 Section "Cold-Formed Metal Framing" for steel stud frames supporting dimension stone cladding.
3. Division 07 Section “Water Repellents” for water repellent material applied to exterior stone cladding.
4. Division 07 Section “Thermal Insulation” for cavity insulation.
5. Division 07 Section “Fluid-Applied Membrane Air Barriers” for air barriers applied to backup system.
6. Division 07 Section "Joint Sealants" for sealing joints in dimension stone cladding system with elastomeric sealants.

1.3 DEFINITIONS

A. Definitions contained in ASTM C 119 apply to this Section.

B. Dimension Stone Cladding System: An exterior wall covering system consisting of dimension stone panels and trim together with anchors, secondary weather barrier (sheathing), mortar, adhesives, fasteners, and sealants used to secure the stone to building structure and to produce a weather-resistant covering.

1.4 PERFORMANCE REQUIREMENTS

A. General: Design stone anchors and anchoring systems according to ASTM C 1242.

B. Structural Performance: Provide dimension stone cladding system capable of withstanding the effects of gravity loads and the following loads and stresses within limits and under conditions indicated:

1. Wind Loads: Determine loads based on the following minimum design wind pressures:

a. Uniform pressure as indicated on Drawings.

C. Seismic Performance: Provide dimension stone cladding system capable of withstanding the effects of earthquake motions determined according to ASCE 7.

D. Thermal Movements: Provide dimension stone cladding system that allows for thermal movements resulting from the following maximum change (range) in ambient and surface temperatures by preventing displacement of stone, opening of joints, overstressing of components, failure of joint sealants, failure of connections, and other detrimental effects. Base engineering calculation on surface temperatures of materials due to both solar heat gain and nighttime-sky heat loss.

1. Temperature Change (Range): 120 deg F (67 deg C), ambient; 180 deg F (100 deg C), material surfaces.

E. Horizontal Building Movement (Interstory Drift): Allow for maximum horizontal building movement equal to quotient resulting from dividing floor-to-floor height at any floor by 400.

F. Shrinkage and Creep: Allow for progressive vertical shortening of building frame equal to 1/8 inch in 10 feet (3 mm in 3 m).

G. Safety Factors for Stone: Design dimension stone cladding system to withstand loads indicated without exceeding allowable working stress of stone determined by dividing stone's average ultimate strength, as established by testing, by the following safety factors:

1. Safety Factor for Oolitic Limestone: 8.

H. Design stone anchors to withstand loads indicated without exceeding allowable working stresses established by the following:

1. For Structural Steel: AISC's "Specification for Structural Steel Buildings - Allowable Stress Design and Plastic Design."
2. For Cold-Formed Steel: AISI's "North American Specification for the Design of Cold-Formed Steel Structural Members."
3. For Postinstalled Fasteners in Concrete: One-fourth of tested capacity when installed in concrete with compressive strength indicated.
4. For Post-Installed Fasteners in Masonry: One-sixth of tested capacity when installed in masonry units indicated.

I. Limit deflection in each prefabricated assembly caused by indicated loads and thermal movements, acting singly or in combination with one another, to not more than 1/720 of assembly's clear span or the following, whichever is smaller:

1. 1/16 inch (1.5 mm), measured in plane of wall.
2. 1/4 inch (6 mm), measured perpendicular to wall.

J. Provisions for Fabrication and Erection Tolerances: Allow for fabrication and erection tolerances of building's structural system. [oncrete fabrication and erection tolerances are specified in Division 03 Section "Cast-in-Place Concrete." Structural-steel fabrication and erection tolerances are specified in Division 05 Section "Structural Steel Framing."

K. Provision for Deflection of Building Structure: Allow for the following:

1. Deflection due to Weight of Dimension Stone Cladding System: Allow for 1/4-inch (6-mm) vertical deflection in 20-foot (6-m) span of structural members supporting dimension stone cladding system.
2. Live Load Deflection: Allow for 1/4-inch (6-mm) vertical deflection, in 20-foot (6-m) span of structural members supporting dimension stone cladding system, due to live loads imposed on building's structural frame after stone installation.

L. Control of Corrosion and Staining: Prevent galvanic and other forms of corrosion as well as staining by isolating metals and other materials from direct contact with incompatible materials. Use materials that do not stain exposed surfaces of stone and joint materials.

1.5 SUBMITTALS

A. Product Data: For each variety of stone, stone accessory, and other manufactured products indicated.

B. Shop Drawings: Show fabrication and installation details for dimension stone cladding system, including dimensions and profiles of stone units.

1. Show locations and details of joints both within dimension stone cladding system and between dimension stone cladding system and other construction.
2. Include details of mortar joints, sealant joints and mortar joints pointed with sealant.
3. Show locations and details of anchors.
4. Include large-scale shaded elevations and details of decorative surfaces and inscriptions.
5. For installed products indicated to comply with design loads, include structural analysis data signed and sealed by the qualified professional engineer responsible for their preparation.

C. Samples for Initial Selection: For joint materials involving color selection.

D. Stone Samples for Verification: Sets for each color, grade, finish, and variety of stone required; not less than 12 inches (300 mm) square.

1. Sets shall consist of at least two Samples, exhibiting extremes of the full range of color and other visual characteristics expected and will establish the standard by which stone will be judged.

E. Welding certificates.

F. Qualification Data: For Installer and fabricator.

G. Material Test Reports: From a qualified independent testing agency, as follows:

1. Stone Test Reports: For each stone variety proposed for use on Project, provide test data indicating compliance with required physical properties, other than abrasion resistance, according to referenced ASTM standards. Base reports on testing done within previous five years.
2. For metal components, indicate chemical and physical properties of metal.
3. Sealant Compatibility and Adhesion Test Report: From sealant manufacturer complying with requirements in Division 07 Section "Joint Sealants" and indicating that sealants will not stain or damage stone. Include interpretation of test results and recommendations for primers and substrate preparation needed for adhesion.

4. Preconstruction Sealant Field Test Report: From Installer, complying with requirements in Division 07 Section "Joint Sealants."

H. Cold-Weather Procedures: Detailed description of methods, materials, and equipment to be used to comply with cold-weather requirements.

1.6 QUALITY ASSURANCE

A. Installer Qualifications: A firm or individual experienced in installing dimension stone cladding systems similar in material, design, and extent to that indicated for this Project, whose work has a record of successful in-service performance.

B. Fabricator Qualifications: Shop that employs skilled workers who custom-fabricate dimension stone cladding systems similar to that required for this Project and whose products have a record of successful in-service performance.

1. Fabricator's responsibilities include fabricating dimension stone cladding and providing professional engineering services needed to assume engineering responsibility.
2. Engineering Responsibility: Comprehensive engineering analysis by a qualified professional engineer.

C. Testing Agency Qualifications: An independent agency qualified according to ASTM E 329 for testing indicated.

D. Source Limitations for Stone: Obtain each variety of stone, regardless of finish, from a single quarry, whether specified in this Section or in another Section of the Specifications, with resources to provide materials of consistent quality in appearance and physical properties.

1. For stone types that include same list of varieties and sources, provide same variety from same source for each.
2. Make quarried blocks available for examination by Architect for appearance characteristics.

E. Source Limitations for Mortar Materials: Obtain mortar ingredients of uniform quality for each cementitious component from a single manufacturer and each aggregate from one source or producer.

F. Source Limitations for Other Materials: Obtain each type of stone accessory, sealant, and other material from a single manufacturer for each product.

G. Welding: Qualify procedures and personnel according to AWS D1.1/D1.1M, "Structural Welding Code—Steel."

H. Mockups: Build mockups to verify selections made under sample submittals and to demonstrate aesthetic effects and set quality standards for materials and execution.

1. Build mockups of typical exterior wall with dimension stone cladding, approximately 72 inches (1800 mm) long by 48 inches (1200 mm) high.

a. Show typical components, attachments to building structure, and methods of installation.
b. Include window opening with stone returns.

c. Include sealant-filled joint complying with requirements in Division 07 Section "Joint Sealants."

2. Approval of mockups does not constitute approval of deviations from the Contract Documents contained in mockups unless such deviations are specifically approved by Architect in writing.

1.7 DELIVERY, STORAGE, AND HANDLING

A. Store and handle stone and related materials to prevent deterioration or damage due to moisture, temperature changes, contaminants, corrosion, breaking, chipping, and other causes.

1. Lift stone with wide-belt slings; do not use wire rope or ropes that might cause staining. Move stone, if required, using dollies with cushioned wood supports.
2. Store stone on wood skids or pallets with nonstaining, waterproof covers. Arrange to distribute weight evenly and to prevent damage to stone. Ventilate under covers to prevent condensation.

B. Mark stone units, on surface that will be concealed after installation, with designations used on Shop Drawings to identify individual stone units. Orient markings on vertical panels so that they are right side up when units are installed.

C. Deliver sealants to Project site in original unopened containers labeled with manufacturer's name, product name and designation, color, expiration period, pot life, curing time, and mixing instructions for multicomponent materials.

D. Store cementitious materials on elevated platforms, under cover, and in a dry location. Do not use cementitious materials that have become damp.

E. Store aggregates in locations where grading and other required characteristics can be maintained and where contamination can be avoided.

1.8 PROJECT CONDITIONS

A. Protect dimension stone cladding during erection as follows:

1. Cover tops of dimension stone cladding installation with nonstaining, waterproof sheeting at end of each day's work. Cover partially completed structures when work is not in progress. Extend cover a minimum of 24 inches (600 mm) down both sides and hold securely in place.
2. Prevent staining of stone from mortar, grout, sealants, and other sources. Immediately remove such materials without damaging stone.
3. Protect base of walls from rain-splashed mud and mortar splatter by coverings spread on ground and over wall surface.
4. Protect sills, ledges, and projections from mortar and sealant droppings.

B. Cold-Weather Requirements: Do not use frozen materials or materials mixed or coated with ice or frost. Remove and replace dimension stone cladding damaged by frost or freezing conditions.

1. Comply with cold-weather construction and protection requirements for masonry contained in ACI 530.1/ASCE 6/TMS 602.

2. Cold-Weather Construction: When ambient temperature is within limits indicated, use the following procedures:

   a. At 40 deg F (5 deg C) and below, produce mortar temperatures between 40 and 120 deg F (5 and 49 deg C) by heating mixing water, sand, or both. Do not heat water to above 160 deg F (71 deg C).
   b. At 32 deg F (0 deg C) and below, maintain temperature of mortar on boards above freezing. Heat stone and substrates so they are above 32 deg F (0 deg C) at time of installation.
   c. At 25 to 20 deg F (minus 4 to minus 7 deg C), heat both sides of walls under construction. Use windbreaks or enclosures when wind velocity exceeds 15 mph (25 km/h).
   d. At 20 deg F (minus 7 deg C) and below, provide enclosure and auxiliary heat to maintain air temperature above 32 deg F (0 deg C) within enclosure.

3. Cold-Weather Protection: When mean daily temperature is within limits indicated, provide the following protection for 48 hours after construction:

   a. 40 to 25 Deg F (Plus 5 to Minus 4 Deg C): Cover dimension stone cladding with a weather-resistant membrane.
   b. 25 to 20 Deg F (Minus 4 to Minus 7 Deg C): Cover dimension stone cladding with weather-resistant, insulating blankets or provide enclosure and heat to maintain air temperature above 32 deg F (0 deg C) within enclosure. Use windbreaks or enclosures when wind velocity exceeds 15 mph (25 km/h).
   c. 20 Deg F (Minus 7 Deg C) and below: Provide enclosure and heat to maintain air temperature above 32 deg F (0 deg C) within enclosure.

C. Hot-Weather Requirements: Comply with hot-weather construction and protection requirements for masonry contained in ACI 530.1/ASCE 6/TMS 602.

D. Environmental Limitations for Sealants: Do not install sealants when ambient and substrate temperatures are outside limits permitted by sealant manufacturer or below 40 deg F (5 deg C) or when joint substrates are wet.

1.9 COORDINATION

A. Coordinate installation of inserts that are to be embedded in concrete or masonry, flashing reglets, and similar items to be used by dimension stone cladding Installer for anchoring, supporting, and flashing of dimension stone cladding system. Furnish setting drawings, templates, and directions for installing such items and deliver to Project site in time for installation.

B. Time delivery and installation of dimension stone cladding to avoid extended on-site storage and to coordinate with work adjacent to dimension stone cladding.

PART 2 - PRODUCTS

2.1 LIMESTONE

A. Limestone: Comply with ASTM C 568.

1. Classification: II Medium-Density.
2. Description: Oolitic limestone.

B. Variety and Source: Subject to compliance with requirements, provide the following:

1. U.S. Stone Industries; Bayer Stone Division; Cottonwood Bottom Ledge.

C. Cut stone from one block or contiguous, matched blocks in which natural markings occur.

D. Finish:

1. Honed: Provide smooth finish at Statehouse exterior stairway.
2. Belt Smoothed: Provide belt smoothed finish at Energy and Service Center building.

E. Thickness: Not less than 3 inches (100 mm), unless otherwise indicated.

2.2 MORTAR MATERIALS

A. Portland Cement: ASTM C 150, Type I or Type II, except Type III may be used for cold-weather construction. Provide natural color or white cement as required to produce mortar color indicated.

1. Low-Alkali Cement: Portland cement for use with limestone shall contain not more than 0.60 percent total alkali when tested according to ASTM C 114.

B. Hydrated Lime: ASTM C 207.

C. Portland Cement-Lime Mix: Packaged blend of portland cement complying with ASTM C 150, Type I or Type III, and hydrated lime complying with ASTM C 207.

D. Aggregate: ASTM C 144; except for joints narrower than 1/4 inch (6 mm) and pointing mortar, use aggregate graded with 100 percent passing No. 16 (1.18-mm) sieve.

E. Water: Potable.

2.3 ANCHORS AND FASTENERS

A. Fabricate anchors, including shelf angles, from stainless steel, ASTM A 666, Type 304, temper as required to support loads imposed without exceeding allowable design stresses. Fabricate dowels and pins for anchors from stainless steel, ASTM A 276, Type 304.

B. Postinstalled Anchor Bolts for Concrete and Masonry: Chemical anchors or torque-controlled expansion anchors made from stainless-steel components complying with ASTM F 593 and ASTM F 594, Alloy Group 1 or 2 (ASTM F 738M and ASTM F 836M, Alloy Group A1 or A4) for bolts and nuts; ASTM A 666 or ASTM A 276, Type 304 or 316, for anchors, with capability to sustain, without failure, a load equal to 4 times the loads imposed, for concrete, or 6 times the load imposed, for masonry, as determined by testing per ASTM E 488, conducted by a qualified independent testing agency.

C. Threaded Fasteners: Heavy hexagon structural bolts, heavy hexagon nuts, and hardened washers.

1. For stainless steel, use annealed stainless-steel bolts, nuts, and washers; ASTM F 593 (ASTM F 738M) for bolts; and ASTM F 594 (ASTM F 836M) for nuts, Alloy Group [1 (A1)] [2 (A4)].

2.4 STONE ACCESSORIES

A. Setting Shims: Strips of resilient plastic or vulcanized neoprene, Type A Shore durometer hardness of 50 to 70, nonstaining to stone, of thickness needed to prevent point loading of stone on anchors and of depths to suit anchors without intruding into required depths of pointing materials.

B. Setting Buttons: Resilient plastic buttons, nonstaining to stone, sized to suit joint thicknesses and bed depths of stone units without intruding into required depths of pointing materials.

C. Sealants for Joints in Dimension Stone Cladding: Manufacturer's standard chemically curing, elastomeric sealants of base polymer and characteristics indicated below that comply with applicable requirements in Division 07 Section "Joint Sealants" and do not stain stone.

2.5 STONE FABRICATION

A. General: Fabricate stone units in sizes and shapes required to comply with requirements indicated, including details on Drawings and Shop Drawings.

1. For limestone, comply with recommendations in ILI's "Indiana Limestone Handbook."

B. Control depth of stone and back check to maintain minimum clearance of 1 inch (25 mm) between backs of stone units and surfaces or projections of structural members, fireproofing (if any), backup walls, and other work behind stone.

C. Dress joints (bed and vertical) straight and at right angle to face, unless otherwise indicated. Shape beds to fit supports.

D. Cut and drill sinkages and holes in stone for anchors, fasteners, supports, and lifting devices as indicated or needed to set stone securely in place.

E. Finish exposed faces and edges of stone, except sawed reveals, to comply with requirements indicated for finish and to match approved samples and mockups.

F. Quirk-miter corners, unless otherwise indicated; provide for cramp anchorage in top and bottom bed joints of corner pieces.

G. Cut stone to produce uniform joints 3/8 inch (10 mm) wide and in locations indicated.

H. Contiguous Work: Provide chases, reveals, reglets, openings, and similar features as required to accommodate contiguous work.

I. Fabricate molded work, including washes and drips, to produce stone shapes with a uniform profile throughout entire unit length, with precisely formed arris slightly eased to prevent snipping, and with matching profile at joints between units.

1. Produce moldings and molded edges with machines that use abrasive shaping wheels made to reverse contour of molding shape.

J. Clean backs of stone to remove rust stains, iron particles, and stone dust.

K. Inspect finished stone units at fabrication plant for compliance with requirements for appearance, material, and fabrication. Replace defective units.

1. Grade and mark stone for overall uniform appearance when assembled in place. Natural variations in appearance are acceptable if installed stone units match range of colors and other appearance characteristics represented in approved samples and mockups.

2.6 MORTAR MIXES

A. General: Comply with referenced standards and with manufacturers' written instructions for mix proportions, mixing equipment, mixer speeds, mixing containers, mixing time, and other procedures needed to produce mortar of uniform quality and with optimum performance characteristics.

1. Do not use admixtures, including pigments, air-entraining agents, accelerators, retarders, water-repellent agents, antifreeze compounds, or other admixtures, unless otherwise indicated. Do not use calcium chloride.
2. Combine and thoroughly mix cementitious materials, water, and aggregates in a mechanical batch mixer, unless otherwise indicated. Discard mortar when it has reached initial set.

B. Portland Cement-Lime Setting Mortar: Comply with ASTM C 270, Proportion Specification, for types of mortar indicated below:

1. Set limestone with Type N mortar.

C. Pointing Mortar: Comply with ASTM C 270, Proportion Specification, for types of mortar indicated. Provide pointing mortar mixed to match Architect's sample and complying with the following:

1. Point limestone with Type N mortar.

PART 3 - EXECUTION

3.1 EXAMINATION

A. Examine surfaces to receive dimension stone cladding and conditions under which dimension stone cladding will be installed, with Installer present, for compliance with requirements for installation tolerances and other conditions affecting performance.

1. For the record, prepare written report, endorsed by Installer, listing conditions detrimental to performance of dimension stone cladding.
2. Proceed with installation only after unsatisfactory conditions have been corrected.

3.2 SETTING DIMENSION STONE CLADDING, GENERAL

A. Before setting stone clean surfaces that are dirty or stained by removing soil, stains, and foreign materials. Clean stone by thoroughly scrubbing with fiber brushes and then drenching with

clear water. Use only mild cleaning compounds that contain no caustic or harsh materials or abrasives.

B. Execute dimension stone cladding installation by skilled mechanics and employ skilled stone fitters at Project site to do necessary field cutting as stone is set.

1. Use power saws with diamond blades to cut stone. Produce lines cut straight and true, with edges eased slightly to prevent snipping.

C. Contiguous Work: Provide reveals, reglets, and openings as required to accommodate contiguous work.

D. Set stone to comply with requirements indicated on Drawings and Shop Drawings. Install anchors, supports, fasteners, and other attachments indicated or necessary to secure dimension stone cladding in place. Shim and adjust anchors, supports, and accessories to set stone accurately in locations indicated with uniform joints of widths indicated and with edges and faces aligned according to established relationships and indicated tolerances.

E. Provide expansion, control, and pressure-relieving joints of widths and at locations indicated.

1. Sealing expansion and other joints is specified in Division 07 Section "Joint Sealants."
2. Keep expansion joints free of mortar and other rigid materials.

F. Install concealed flashing at continuous shelf angles, lintels, ledges, and similar obstructions to downward flow of water to divert water to building exterior.

G. Keep cavities open where unfilled space is indicated between back of stone units and backup wall; do not fill cavities with mortar or grout.

1. Place weep holes in joints where moisture may accumulate, including base of cavity walls, above shelf angles, and flashing. Locate weep holes at intervals not exceeding 24 inches (600 mm).

3.3 SETTING MECHANICALLY ANCHORED DIMENSION STONE CLADDING

A. Attach anchors securely to stone and to backup surfaces. Comply with recommendations in ASTM C 1242.

B. Provide compressible filler in ends of dowel holes and bottoms of kerfs to prevent end bearing of dowels and anchor tabs on stone. Fill remainder of anchor holes and kerfs with sealant indicated for filling kerfs.

C. Set stone supported on clips or continuous angles on resilient setting shims. Use material of thickness required to maintain uniform joint widths and to prevent point loading of stone on anchors. Hold shims back from face of stone a distance at least equal to width of joint.

3.4 SETTING DIMENSION STONE CLADDING WITH MORTAR

A. Set stone in full bed of mortar with head joints filled, unless otherwise indicated.

1. Use setting buttons of adequate size, in sufficient quantity, and of thickness required to maintain uniform joint width and to prevent mortar from extruding. Hold buttons back

from face of stone a distance at least equal to width of joint, but not less than depth of pointing materials.

2. Do not set heavy units or projecting courses until mortar in courses below has hardened enough to resist being squeezed out of joint.
3. Support and brace projecting stones until wall above is in place and mortar has set.
4. Provide compressible filler in ends of dowel holes and bottoms of kerfs to prevent end bearing of dowels and anchor tabs on stone. Fill remainder of anchor holes and kerfs with mortar.

B. Embed ends of sills in mortar; leave remainder of joint open until final pointing.

C. Rake out joints for pointing with mortar to depths of not less than 1/2 inch (12 mm). Rake joints to uniform depths with square bottoms and clean sides.

D. Prepare stone-joint surfaces for pointing with mortar by removing dust and mortar particles. Where setting mortar was removed to depths greater than surrounding areas, apply first layer of pointing mortar in layers not more than 3/8 inch (10 mm) until a uniform depth is formed.

E. Point stone joints by placing pointing mortar in layers not more than 3/8 inch (10 mm). Compact each layer thoroughly and allow to become thumbprint hard before applying next layer.

F. Tool joints with a round jointer having a diameter 1/8 inch (3 mm) larger than width of joint, when pointing mortar is thumbprint hard.

G. Rake out mortar from sealant-pointed joints to depths of not less than 1/2 inch (12 mm) nor less than that required for sealant and sealant backing. Rake joints to uniform depths with square bottoms and clean sides.

H. Set the following dimension stone cladding with unfilled head joints for installing joint sealants:

1. Cornices.
2. Copings.
3. Belt and other projecting courses.

3.5 JOINT-SEALANT INSTALLATION

A. Prepare joints and apply sealants of type and at locations indicated to comply with applicable requirements in Division 07 Section "Joint Sealants."

3.6 INSTALLATION TOLERANCES

A. Variation from Plumb: For vertical lines and surfaces of walls, do not exceed 1/4 inch in 10 feet (6 mm in 3 m), 3/8 inch in 20 feet (10 mm in 6 m), or 1/2 inch in 40 feet (12 mm in 12 m) or more. For external corners, corners and jambs within 20 feet (6 m) of an entrance, expansion joints, and other conspicuous lines, do not exceed 1/8 inch in 10 feet (3 mm in 3 m), 1/4 inch in 20 feet (6 mm in 6 m), or 3/8 inch in 40 feet (10 mm in 12 m) or more.

B. Variation from Level: For lintels, sills, water tables, parapets, horizontal bands, horizontal grooves, and other conspicuous lines, do not exceed 1/8 inch in 10 feet (3 mm in 3 m), 1/4 inch in 20 feet (6 mm in 6 m), or 3/8 inch (10 mm) maximum.

C. Variation of Linear Building Line: For positions shown in plan and related portions of walls and partitions, do not exceed 1/4 inch in 20 feet (6 mm in 6 m) or 1/2 inch in 40 feet (12 mm in 12 m) or more.

D. Variation in Cross-Sectional Dimensions: For thickness of walls from dimensions indicated, do not exceed plus or minus 1/4 inch (6 mm).

E. Variation in Joint Width: Do not vary from average joint width more than plus or minus 1/8 inch (3 mm) or a quarter of nominal joint width, whichever is less. For joints within 60 inches (1500 mm) of each other, do not vary more than 1/8 inch (3 mm) or a quarter of nominal joint width, whichever is less from one to the other.

F. Variation in Plane between Adjacent Stone Units (Lipping): Do not exceed 1/16-inch (1.5-mm) difference between planes of adjacent units.

3.7 ADJUSTING AND CLEANING

A. Remove and replace broken, chipped, stained, or otherwise damaged stone, defective joints, and dimension stone cladding that does not match approved samples and mockups. Damaged stone may be repaired if Architect approves methods and results.

B. Replace in a manner that results in dimension stone cladding's matching approved samples and mockups, complying with other requirements, and showing no evidence of replacement.

C. In-Progress Cleaning: Clean dimension stone cladding as work progresses. Remove mortar fins and smears before tooling joints. Remove excess sealant and smears as sealant is installed.

D. Final Cleaning: Clean dimension stone cladding no fewer than six days after completion of pointing and sealing, using clean water and stiff-bristle fiber brushes. Do not use wire brushes, acid-type cleaning agents, cleaning agents containing caustic compounds or abrasives, or other materials or methods that could damage stone.

END OF SECTION 044200

SECTION 047200 - CAST STONE MASONRY

PART 1 - GENERAL

1.1 RELATED DOCUMENTS

A. Drawings and general provisions of the Contract, including General and Supplementary Conditions and Division 01 Specification Sections, apply to this Section.

1.2 SUMMARY

A. Section Includes:

1. Cast stone trim including the following:

a. Copings.

b. Accessories.

B. Related Sections:

1. Division 04 Section "Unit Masonry" for installing cast stone units in unit masonry.

1.3 ACTION SUBMITTALS

A. Product Data: For each type of product indicated.

1. For cast stone units, include construction details, material descriptions, dimensions of individual components and profiles, and finishes.

B. Shop Drawings: Show fabrication and installation details for cast stone units. Include dimensions, details of reinforcement and anchorages if any, and indication of finished faces.

1. Include building elevations showing layout of units and locations of joints and anchors.

C. Samples for Initial Selection: For colored mortar.

D. Samples for Verification: For each color and texture of cast stone required, 10 inches250 mm square in size.

1.4 INFORMATIONAL SUBMITTALS

A. Qualification Data: For manufacturer.

1. Include copies of material test reports for completed projects, indicating compliance of cast stone with ASTM C 1364.

B. Material Test Reports: For each mix required to produce cast stone, based on testing according to ASTM C 1364, including test for resistance to freezing and thawing.

1. Provide test reports based on testing within previous two years.

1.5 QUALITY ASSURANCE

A. Manufacturer Qualifications: A qualified manufacturer of cast stone units similar to those indicated for this Project, that has sufficient production capacity to manufacture required units, and is a plant certified by the Cast Stone Institute.

B. Testing Agency Qualifications: Qualified according to ASTM E 329 for testing indicated.

C. Source Limitations for Cast Stone: Obtain cast stone units through single source from single manufacturer.

D. Mockups: Furnish cast stone for installation in mockups specified in Division 04 Section "Unit Masonry."

1.6 DELIVERY, STORAGE, AND HANDLING

A. Coordinate delivery of cast stone with unit masonry work.

B. Pack, handle, and ship cast stone units in suitable packs or pallets.

1. Lift with wide-belt slings; do not use wire rope or ropes that might cause staining. Move cast stone units, if required, using dollies with wood supports.
2. Store cast stone units on wood skids or pallets with nonstaining, waterproof covers, securely tied. Arrange to distribute weight evenly and to prevent damage to units. Ventilate under covers to prevent condensation.

C. Store cementitious materials on elevated platforms, under cover, and in a dry location. Do not use cementitious materials that have become damp.

1.7 PROJECT CONDITIONS

A. Cold-Weather Requirements: Do not use frozen materials or materials mixed or coated with ice or frost. Do not build on frozen substrates. Comply with cold-weather construction requirements in ACI 530.1/ASCE 6/TMS 602.

1. Cold-Weather Cleaning: Use liquid cleaning methods only when air temperature is 40 deg F 4 deg C and above and will remain so until cast stone has dried, but no fewer than seven days after completing cleaning.

B. Hot-Weather Requirements: Comply with hot-weather construction requirements in ACI 530.1/ASCE 6/TMS 602.

PART 2 - PRODUCTS

2.1 CAST STONE MATERIALS

A. General: Comply with ASTM C 1364 and the following:

B. Color Pigment: ASTM C 979, synthetic mineral-oxide pigments or colored water-reducing admixtures; color stable, free of carbon black, nonfading, and resistant to lime and other alkalis.

2.2 CAST STONE UNITS

A. Manufacturers: Subject to compliance with requirements, **provide products by one of the following**:

1. Architectural Cast Stone, Inc.
2. Corinthian Cast Stone, Inc.
3. Continental Cast Stone Manufacturing, Inc.
4. Heritage Cast Stone, Inc.
5. Midwest Cast Stone.

B. Provide cast stone units complying with ASTM C 1364 using either the vibrant dry tamp or wet-cast method.

1. Provide units that are resistant to freezing and thawing as determined by laboratory testing according to ASTM C 666/C 666M, Procedure A, as modified by ASTM C 1364.

C. Fabricate units with sharp arris and accurately reproduced details, with indicated texture on all exposed surfaces unless otherwise indicated.

1. Slope exposed horizontal surfaces 1:12 to drain unless otherwise indicated.
2. Provide drips on projecting elements unless otherwise indicated.

D. Fabrication Tolerances:

1. Variation in Cross Section: Do not vary from indicated dimensions by more than 1/8 inch
2. Variation in Length: Do not vary from indicated dimensions by more than 1/360 of the length of unit or 1/8 inch, whichever is greater, but in no case by more than 1/4 inch.
3. Warp, Bow, and Twist: Not to exceed 1/360 of the length of unit or 1/8 inch, whichever is greater.
4. Location of Grooves, False Joints, Holes, Anchorages, and Similar Features: Do not vary from indicated position by more than 1/8 inch on formed surfaces of units and 3/8 inch on unformed surfaces.

E. Cure units as follows:

1. Cure units in enclosed moist curing room at 95 to 100 percent relative humidity and temperature of 100 deg F 38 deg C for 12 hours or 70 deg F 21 deg C for 16 hours.
2. Keep units damp and continue curing to comply with one of the following:

a. No fewer than five days at mean daily temperature of 70 deg F 21 deg C or above.

F. Acid etch units after curing to remove cement film from surfaces to be exposed to view.

G. Colors and Textures: As selected by Architect from manufacturer's full range.

2.3 MORTAR MATERIALS

A. Aggregate for Mortar: ASTM C 144.

1. For mortar that is exposed to view, use washed aggregate consisting of natural sand or crushed stone.
2. For joints less than 1/4 inch thick, use aggregate graded with 100 percent passing the No. 16 sieve.

B. Water: Potable.

2.4 ACCESSORIES

A. Anchors/Dowels: Type and size indicated, fabricated from Type 304 stainless steel complying with ASTM A 240/A 240M, ASTM A 276, or ASTM A 666.

B. Skate Stoppers:

1. Product: Morgan, Laser series – Surface Mount by Skate Stoppers
2. Material: White Tombasil
3. Finish: Brushed finish with matte clear coat
4. Corner Radius : ½”
5. Outside Dimensions: 1inch wide by 6 ¾ inch deep by 1 inch tall.
6. Anchoring: anchored with two blind SMART PINS PLUS anchors. Use anchors in conjunction with two-part epoxy.
7. Product spacing: 18 inches from end of planters/walls and per drawing.

2.5 MORTAR MIXES

A. Comply with requirements in Division 04 Section "Unit Masonry" for mortar mixes.

2.6 SOURCE QUALITY CONTROL

A. Engage a qualified independent testing agency to sample and test cast stone units according to ASTM C 1364.

1. Include one test for resistance to freezing and thawing.

PART 3 - EXECUTION

3.1 EXAMINATION

A. Examine substrates and conditions, with Installer present, for compliance with requirements for installation tolerances and other conditions affecting performance of work.

B. Proceed with installation only after unsatisfactory conditions have been corrected.

3.2 SETTING CAST STONE IN MORTAR

A. Rake out joints for pointing with mortar to depths of not less than 3/4 inch19 mm. Rake joints to uniform depths with square bottoms and clean sides. Scrub faces of units to remove excess mortar as joints are raked.

B. Point mortar joints by placing and compacting mortar in layers not greater than 3/8 inch10 mm. Compact each layer thoroughly and allow it to become thumbprint hard before applying next layer.

C. Rake out joints for pointing with sealant to depths of not less than 3/4 inch19 mm. Scrub faces of units to remove excess mortar as joints are raked.

D. Point joints with sealant to comply with applicable requirements in Section 079200 "Joint Sealants."

1. Prime cast-stone surfaces to receive sealant and install compressible backer rod in joints before applying sealant unless otherwise indicated.

E. Provide sealant joints at head joints of copings and other horizontal surfaces; at expansion, control, and pressure-relieving joints; and at locations indicated.

1. Keep joints free of mortar and other rigid materials.
2. Build in compressible foam-plastic joint fillers where indicated.
3. Form joint of width indicated, but not less than 3/8 inch.
4. Prime cast-stone surfaces to receive sealant and install compressible backer rod in joints before applying sealant unless otherwise indicated.
5. Prepare and apply sealant of type and at locations indicated to comply with applicable requirements in Section 079200 "Joint Sealants."

3.3 INSTALLATION TOLERANCES

A. Variation from Plumb: Do not exceed 1/8 inch in 10 feet, 1/4 inch in 20 feet, or 1/2 inch maximum.

B. Variation from Level: Do not exceed 1/8 inch in 10 feet, 1/4 inch in 20 feet, or 1/2 inch maximum.

C. Variation in Joint Width: Do not vary joint thickness more than 1/8 inch in 36 inches or one-fourth of nominal joint width, whichever is less.

D. Variation in Plane between Adjacent Surfaces (Lipping): Do not vary from flush alignment with adjacent units or adjacent surfaces indicated to be flush with units by more than 1/16 inch, except where variation is due to warpage of units within tolerances specified.

3.4 ADJUSTING AND CLEANING

A. Remove and replace stained and otherwise damaged units and units not matching approved Samples. Cast stone may be repaired if methods and results are approved by Architect.

B. Replace units in a manner that results in cast stone matching approved Samples, complying with other requirements, and showing no evidence of replacement.

C. In-Progress Cleaning: Clean cast stone as work progresses.

1. Remove mortar fins and smears before tooling joints.
2. Remove excess sealant immediately, including spills, smears, and spatter.

D. Final Cleaning: After mortar is thoroughly set and cured, clean exposed cast stone as follows:

1. Remove large mortar particles by hand with wooden paddles and nonmetallic scrape hoes or chisels.
2. Test cleaning methods on sample; leave one sample uncleaned for comparison purposes. Obtain Architect's approval of sample cleaning before proceeding with cleaning of cast stone.
3. Protect adjacent surfaces from contact with cleaner by covering them with liquid strippable masking agent or polyethylene film and waterproof masking tape.
4. Wet surfaces with water before applying cleaners; remove cleaners promptly by rinsing thoroughly with clear water.
5. Clean cast stone by bucket-and-brush hand-cleaning method described in BIA Technical Notes 20.

END OF SECTION 047200

SECTION 05 1200 - STRUCTURAL STEEL FRAMING

PART 1 - GENERAL

1.1 RELATED DOCUMENTS

A. Drawings and general provisions of the Contract, including General and Supplementary Conditions and Division 01 Specification Sections, apply to this Section.

1.2 SUMMARY

A. Section Includes:
1. Structural steel.
2. Grout.

B. Related Sections:
1. Division 05 Section "Steel Decking" for field installation of shear connectors through deck.
2. Division 05 Section "Metal Fabrications" for steel lintels and shelf angles not attached to structural-steel frame miscellaneous steel fabrications and other metal items not defined as structural steel.
3. Division 05 Section "Metal Pan Stairs."
4. Division 09 painting Sections for surface-preparation and priming requirements.

1.3 DEFINITIONS

A. Structural Steel: Elements of structural-steel frame, as classified by AISC 303, "Code of Standard Practice for Steel Buildings and Bridges."

B. Heavy Sections: Rolled and built-up sections as follows:
1. Shapes included in ASTM A 6/A 6M with flanges thicker than 1-1/2 inches (38 mm).
2. Welded built-up members with plates thicker than 2 inches (50 mm).
3. Column base plates thicker than 2 inches (50 mm).

C. Demand Critical Welds: Those welds, the failure of which would result in significant degradation of the strength and stiffness of the Seismic-Load-Resisting System and which are indicated as "Demand Critical" or "Seismic Critical" on Drawings.

1.4 PERFORMANCE REQUIREMENTS

A. Connections: Provide details of connections required by the Contract Documents to be selected or completed by structural-steel fabricator, including comprehensive engineering design by a qualified professional engineer, to withstand loads indicated and comply with other information and restrictions indicated.
1. Select and complete connections using schematic details indicated.

B. Moment Connections: Type FR, fully restrained.

1.5 ACTION SUBMITTALS

A. Product Data: For each type of product.

B. Shop Drawings: Show fabrication of structural-steel components.
1. Include details of cuts, connections, splices, camber, holes, and other pertinent data.
2. Include embedment Drawings.
3. Indicate welds by standard AWS symbols, distinguishing between shop and field welds, and show size, length, and type of each weld. Show backing bars that are to be removed and supplemental fillet welds where backing bars are to remain.
4. Indicate type, size, and length of bolts, distinguishing between shop and field bolts. Identify pretensioned and slip-critical, high-strength bolted connections.
5. Identify members and connections of the Seismic-Load-Resisting System.
6. Indicate locations and dimensions of protected zones.
7. Identify demand critical welds.

C. Welding Procedure Specifications (WPSs) and Procedure Qualification Records (PQRs): Provide according to AWS D1.1/D1.1M, "Structural Welding Code - Steel," for each welded joint whether prequalified or qualified by testing, including the following:
1. Power source (constant current or constant voltage).
2. Electrode manufacturer and trade name, for demand critical welds.

D. Delegated-Design Submittal: For structural-steel connections indicated to comply with design loads, include analysis data signed and sealed by the qualified professional engineer responsible for their preparation.

1.6 INFORMATIONAL SUBMITTALS

A. Qualification Data: For Installer and fabricator shop-painting.

B. Welding certificates.

C. Paint Compatibility Certificates: From manufacturers of topcoats applied over shop primers, certifying that shop primers are compatible with topcoats.

D. Mill test reports for structural steel, including chemical and physical properties.

E. Product Test Reports: For the following:
1. Bolts, nuts, and washers including mechanical properties and chemical analysis.
2. Direct-tension indicators.
3. Tension-control, high-strength, bolt-nut-washer assemblies.
4. Shear stud connectors.
5. Shop primers.
6. Nonshrink grout.

F. Survey of existing conditions.

G. Source quality-control reports.

H. Field quality-control reports.

1.7 QUALITY ASSURANCE

A. Fabricator Qualifications: A qualified fabricator that participates in the AISC Quality Certification Program and is designated an AISC-Certified Plant, Category STD.

B. Installer Qualifications: A qualified installer who participates in the AISC Quality Certification Program and is designated an AISC-Certified Erector, Category ACSE.

C. Shop-Painting Applicators: Qualified according to AISC's Sophisticated Paint Endorsement P1 or SSPC-QP 3, "Standard Procedure for Evaluating Qualifications of Shop Painting Applicators."

D. Welding Qualifications: Qualify procedures and personnel according to AWS D1.1/D1.1M, "Structural Welding Code - Steel."
1. Welders and welding operators performing work on bottom-flange, demand-critical welds shall pass the supplemental welder qualification testing, as required by AWS D1.8. FCAW-S and FCAW-G shall be considered separate processes for welding personnel qualification.

E. Comply with applicable provisions of the following specifications and documents:
1. AISC 303.
2. AISC 341 and AISC 341s1.
3. AISC 360.
4. RCSC's "Specification for Structural Joints Using ASTM A 325 or A 490 Bolts."

F. Preinstallation Conference: Conduct conference at Project site.

1.8 DELIVERY, STORAGE, AND HANDLING

A. Store materials to permit easy access for inspection and identification. Keep steel members off ground and spaced by using pallets, dunnage, or other supports and spacers. Protect steel members and packaged materials from corrosion and deterioration.
1. Do not store materials on structure in a manner that might cause distortion, damage, or overload to members or supporting structures. Repair or replace damaged materials or structures as directed.

B. Store fasteners in a protected place in sealed containers with manufacturer's labels intact.
1. Fasteners may be repackaged provided Owner's testing and inspecting agency observes repackaging and seals containers.
2. Clean and relubricate bolts and nuts that become dry or rusty before use.
3. Comply with manufacturers' written recommendations for cleaning and lubricating ASTM F 1852 fasteners and for retesting fasteners after lubrication.

1.9 COORDINATION

A. Coordinate selection of shop primers with topcoats to be applied over them. Comply with paint and coating manufacturers' recommendations to ensure that shop primers and topcoats are compatible with one another.

B. Coordinate installation of anchorage items to be embedded in or attached to other construction without delaying the Work. Provide setting diagrams, sheet metal templates, instructions, and directions for installation.

PART 2 - PRODUCTS

2.1 STRUCTURAL-STEEL MATERIALS

A. W-Shapes: ASTM A 992/A 992M, Grade 50 (345).

B. Channels, Angles, M , S-Shapes: ASTM A 36/A 36M.

C. Plate and Bar: ASTM A 36/A 36M.

D. Corrosion-Resisting Structural-Steel Shapes, Plates, and Bars: ASTM A 588/A 588M, Grade 50 (345).

E. Cold-Formed Hollow Structural Sections: ASTM A 500, Grade B C, structural tubing.

F. Corrosion-Resisting Cold-Formed Hollow Structural Sections: ASTM A 847/A 847M, structural tubing.

G. Steel Pipe: ASTM A 53/A 53M, Type E or S, Grade B.
1. Weight Class: As indicated on drawings.
2. Finish: Black except where indicated to be galvanized.

H. Steel Castings: ASTM A 216/A 216M, Grade WCB with supplementary requirement S11.

I. Steel Forgings: ASTM A 668/A 668M.

J. Welding Electrodes: Comply with AWS requirements.

2.2 BOLTS, CONNECTORS, AND ANCHORS

A. Tension-Control, High-Strength Bolt-Nut-Washer Assemblies: ASTM F 1852, Type 1, heavy-hex head assemblies consisting of steel structural bolts with splined ends, heavy-hex carbon-steel nuts, and hardened carbon-steel washers.
1. Finish: Plain.

B. Shear Connectors: ASTM A 108, Grades 1015 through 1020, headed-stud type, cold-finished carbon steel; AWS D1.1/D1.1M, Type B.

C. Threaded Rods: ASTM A 36/A 36M.
1. Nuts: ASTM A 563 (ASTM A 563M) hex carbon steel.
2. Washers: ASTM A 36/A 36M carbon steel.
3. Finish: Plain.

2.3 PRIMER

A. Primer: Fabricator's standard lead- and chromate-free, nonasphaltic, rust-inhibiting primer complying with MPI#79 and compatible with topcoat.

B. Galvanizing Repair Paint: ASTM A 780.

2.4 GROUT

A. Nonmetallic, Shrinkage-Resistant Grout: ASTM C 1107, factory-packaged, nonmetallic aggregate grout, noncorrosive and nonstaining, mixed with water to consistency suitable for application and a 30-minute working time.

2.5 FABRICATION

A. Structural Steel: Fabricate and assemble in shop to greatest extent possible. Fabricate according to AISC's "Code of Standard Practice for Steel Buildings and Bridges" and AISC 360.
   1. Camber structural-steel members where indicated.
   2. Fabricate beams with rolling camber up.
   3. Identify high-strength structural steel according to ASTM A 6/A 6M and maintain markings until structural steel has been erected.
   4. Mark and match-mark materials for field assembly.
   5. Complete structural-steel assemblies, including welding of units, before starting shop-priming operations.

B. Thermal Cutting: Perform thermal cutting by machine to greatest extent possible.
   1. Plane thermally cut edges to be welded to comply with requirements in AWS D1.1/D1.1M.

C. Bolt Holes: Cut, drill, or punch standard bolt holes perpendicular to metal surfaces.

D. Finishing: Accurately finish ends of columns and other members transmitting bearing loads.

E. Cleaning: Clean and prepare steel surfaces that are to remain unpainted according to SSPC-SP 2, "Hand Tool Cleaning."

F. Shear Connectors: Prepare steel surfaces as recommended by manufacturer of shear connectors. Use automatic end welding of headed-stud shear connectors according to AWS D1.1/D1.1M and manufacturer's written instructions.

G. Steel Wall-Opening Framing: Select true and straight members for fabricating steel wall-opening framing to be attached to structural steel. Straighten as required to provide uniform, square, and true members in completed wall framing.

H. Holes: Provide holes required for securing other work to structural steel and for other work to pass through steel framing members.
   1. Cut, drill, or punch holes perpendicular to steel surfaces. Do not thermally cut bolt holes or enlarge holes by burning.
   2. Baseplate Holes: Cut, drill, mechanically thermal cut, or punch holes perpendicular to steel surfaces.
   3. Weld threaded nuts to framing and other specialty items indicated to receive other work.

2.6 SHOP CONNECTIONS

A. High-Strength Bolts: Shop install high-strength bolts according to RCSC's "Specification for Structural Joints Using ASTM A 325 or A 490 Bolts" for type of bolt and type of joint specified.
   1. Joint Type: Pretensioned.

B. Weld Connections: Comply with AWS D1.1/D1.1M and AWS D1.8/D1.8M for tolerances, appearances, welding procedure specifications, weld quality, and methods used in correcting welding work.
   1. Assemble and weld built-up sections by methods that will maintain true alignment of axes without exceeding tolerances in AISC 303 for mill material.

2.7 SHOP PRIMING

A. Shop prime non-galvanized steel surfaces exposed to view.

B. Surface Preparation: Clean surfaces to be painted. Remove loose rust and mill scale and spatter, slag, or flux deposits. Prepare surfaces according to the following specifications and standards:
   1. SSPC-SP 2, "Hand Tool Cleaning."

C. Priming: Immediately after surface preparation, apply primer according to manufacturer's written instructions and at rate recommended by SSPC to provide a minimum dry film thickness of 1.5 mils (0.038 mm). Use priming methods that result in full coverage of joints, corners, edges, and exposed surfaces.
   1. Stripe paint corners, crevices, bolts, welds, and sharp edges.
   2. Apply two coats of shop paint to surfaces that are inaccessible after assembly or erection. Change color of second coat to distinguish it from first.

D. Painting: Prepare steel and apply a one-coat, nonasphaltic primer to provide a dry film thickness of not less than 1.5 mils (0.038 mm).

2.8 GALVANIZING

A. Hot-Dip Galvanized Finish: Apply zinc coating by the hot-dip process to structural steel according to ASTM A 123/A 123M.
   1. Fill vent and drain holes that will be exposed in the finished Work unless they will function as weep holes, by plugging with zinc solder and filing off smooth.
   2. Galvanize lintels and shelf angles.
   3. Galvanize interior and exterior ladders, including brackets and fasteners.

2.9 SOURCE QUALITY CONTROL

A. Testing Agency: Owner will engage an independent testing and inspecting agency to perform shop tests and inspections and prepare test reports.
   1. Provide testing agency with access to places where structural-steel work is being fabricated or produced to perform tests and inspections.

B. Correct deficiencies in Work that test reports and inspections indicate does not comply with the Contract Documents.

C. Bolted Connections: Shop-bolted connections will be tested and inspected according to RCSC's "Specification for Structural Joints Using ASTM A 325 or A 490 Bolts."

D. Welded Connections: In addition to visual inspection, shop-welded connections will be tested and inspected according to AWS D1.1/D1.1M and the following inspection procedures, at testing agency's option:
   1. Liquid Penetrant Inspection: ASTM E 165.

2. Magnetic Particle Inspection: ASTM E 709; performed on root pass and on finished weld. Cracks or zones of incomplete fusion or penetration will not be accepted.
3. Ultrasonic Inspection: ASTM E 164.
4. Radiographic Inspection: ASTM E 94.

E. In addition to visual inspection, shop-welded shear connectors will be tested and inspected according to requirements in AWS D1.1/D1.1M for stud welding and as follows:
1. Bend tests will be performed if visual inspections reveal either a less-than-continuous 360-degree flash or welding repairs to any shear connector.
2. Tests will be conducted on additional shear connectors if weld fracture occurs on shear connectors already tested, according to requirements in AWS D1.1/D1.1M.

PART 3 - EXECUTION

3.1 EXAMINATION

A. Verify, with steel Erector present, elevations of concrete- and masonry-bearing surfaces and locations of anchor rods, bearing plates, and other embedments for compliance with requirements.
1. Prepare a certified survey of bearing surfaces, anchor rods, bearing plates, and other embedments showing dimensions, locations, angles, and elevations.

B. Proceed with installation only after unsatisfactory conditions have been corrected.

3.2 PREPARATION

A. Provide temporary shores, guys, braces, and other supports during erection to keep structural steel secure, plumb, and in alignment against temporary construction loads and loads equal in intensity to design loads. Remove temporary supports when permanent structural steel, connections, and bracing are in place unless otherwise indicated.
1. Do not remove temporary shoring supporting composite deck construction until cast-in-place concrete has attained its design compressive strength.

3.3 ERECTION

A. Set structural steel accurately in locations and to elevations indicated and according to AISC 303 and AISC 360.

B. Base Bearing and Leveling Plates: Clean concrete surfaces of bond-reducing materials, and roughen surfaces prior to setting plates. Clean bottom surface of plates.
1. Set plates for structural members on wedges, shims, or setting nuts as required.
2. Weld plate washers to top of baseplate.
3. Snug-tighten anchor rods after supported members have been positioned and plumbed. Do not remove wedges or shims but, if protruding, cut off flush with edge of plate before packing with grout.
4. Promptly pack grout solidly between bearing surfaces and plates so no voids remain. Neatly finish exposed surfaces; protect grout and allow to cure. Comply with manufacturer's written installation instructions for shrinkage-resistant grouts.

C. Maintain erection tolerances of structural steel within AISC's "Code of Standard Practice for Steel Buildings and Bridges."

D. Align and adjust various members that form part of complete frame or structure before permanently fastening. Before assembly, clean bearing surfaces and other surfaces that will be in permanent contact with members. Perform necessary adjustments to compensate for discrepancies in elevations and alignment.
   1. Level and plumb individual members of structure.
   2. Make allowances for difference between temperature at time of erection and mean temperature when structure is completed and in service.

E. Splice members only where indicated.

F. Do not use thermal cutting during erection unless approved by Architect. Finish thermally cut sections within smoothness limits in AWS D1.1/D1.1M.

G. Do not enlarge unfair holes in members by burning or using drift pins. Ream holes that must be enlarged to admit bolts. Flame cutting shall not be permitted unless approved by the architect.

H. Shear Connectors: Prepare steel surfaces as recommended by manufacturer of shear connectors. Use automatic end welding of headed-stud shear connectors according to AWS D1.1/D1.1M and manufacturer's written instructions.

3.4 FIELD CONNECTIONS

A. High-Strength Bolts: Install high-strength bolts according to RCSC's "Specification for Structural Joints Using ASTM A 325 or A 490 Bolts" for type of bolt and type of joint specified.
   1. Joint Type: Pretensioned.

B. Weld Connections: Comply with AWS D1.1/D1.1M and AWS D1.8/D1.8M for tolerances, appearances, welding procedure specifications, weld quality, and methods used in correcting welding work.
   1. Comply with AISC 303 and AISC 360 for bearing, alignment, adequacy of temporary connections, and removal of paint on surfaces adjacent to field welds.
   2. Remove backing bars or runoff tabs where indicated, back gouge, and grind steel smooth.
   3. Assemble and weld built-up sections by methods that will maintain true alignment of axes without exceeding tolerances in AISC's "Code of Standard Practice for Steel Buildings and Bridges" for mill material.

3.5 FIELD QUALITY CONTROL

A. Testing Agency: Owner will engage a qualified independent testing and inspecting agency to inspect field welds and high-strength bolted connections.

B. Bolted Connections: Bolted connections will be tested and inspected according to RCSC's "Specification for Structural Joints Using ASTM A 325 or A 490 Bolts."

C. Welded Connections: Field welds will be visually inspected according to AWS D1.1/D1.1M.
   1. In addition to visual inspection, where indicated on drawings field welds will be tested and inspected according to AWS D1.1/D1.1M and the following inspection procedures, at testing agency's option:
      a. Liquid Penetrant Inspection: ASTM E 165.

b. Magnetic Particle Inspection: ASTM E 709; performed on root pass and on finished weld. Cracks or zones of incomplete fusion or penetration will not be accepted.
c. Ultrasonic Inspection: ASTM E 164.
d. Radiographic Inspection: ASTM E 94.

D. In addition to visual inspection, test and inspect field-welded shear connectors according to requirements in AWS D1.1/D1.1M for stud welding and as follows:
1. Perform bend tests if visual inspections reveal either a less-than-continuous 360-degree flash or welding repairs to any shear connector.
2. Conduct tests on additional shear connectors if weld fracture occurs on shear connectors already tested, according to requirements in AWS D1.1/D1.1M.

E. Correct deficiencies in Work that test reports and inspections indicate does not comply with the Contract Documents.

3.6 REPAIRS AND PROTECTION

A. Galvanized Surfaces: Clean field welds, bolted connections, and abraded areas. Repair hot-dip galvanizing to comply with the following:
1. Hot Galvanizing Repair Low-Melting Point Zinc Alloy Repair Rods:
a. Zinc Cadmium: Liquid temperature 518ºF-527ºF.
b. Zinc-Tin Copper Alloys: Liquid temperature 660ºF-670ºF.
1) Zinc-tin copper alloys must be applied while in a semi-solid state in the preferred application temperature range from 480ºF-570ºF.
2. Repair Procedures Using Zinc-Based Solder:
a. Surfaces must be cleaned using a wire brush, a light grinding action or a mild blasting. To ensure a smooth reconditioned coating can be affected, surface preparation shall extend into the surrounding, undamaged galvanized coating.
b. If the area to be repaired includes welds, all weld flux residue and weld spatter shall be removed by wire brush, chipping, grinding or power scaling.
c. Areas to be repaired shall be preheated to at least 600ºF.
1) Do not heat the surface over 750ºF or allow the surrounding galvanized coating to be burned. Wirebrush the surface to be reconditioned during preheating and pre-flux.
a) Pre-flux is required when solder will not adhere to stone surface.
d. Rub the cleaned, preheated welds/areas with the repair rod to deposit an evenly distributed layer of zinc alloy.
e. Thickness shall match original hot-dip galvanizing.
f. Rinse with water or wipe with a damp cloth to remove flux residue.

B. Touchup Painting: Immediately after erection, clean exposed areas where primer is damaged or missing and paint with the same material as used for shop painting to comply with SSPC-PA 1 for touching up shop-painted surfaces.
1. Clean and prepare surfaces by SSPC-SP 2 hand-tool cleaning or SSPC-SP 3 power-tool cleaning.

C. Touchup Painting: Cleaning and touchup painting are specified in Division 09 painting Sections.

END OF SECTION 05 1200

SECTION 05 2100 - STEEL JOIST FRAMING

PART 1 - GENERAL

1.1 SUMMARY

A. This Section includes the following:
   1. K-series steel joists.
   2. K-series steel joist substitutes.

1.2 ACTION SUBMITTALS

A. Product Data: For each type of joist, accessory, and product.

B. Shop Drawings:
   1. Include layout, designation, number, type, location, and spacing of joists.
   2. Include joining and anchorage details, bracing, bridging, and joist accessories; splice and connection locations and details; and attachments to other construction.
   3. Indicate locations and details of bearing plates to be embedded in other construction.

1.3 INFORMATIONAL SUBMITTALS

A. Qualification Data: For manufacturer.

B. Welding certificates.

C. Manufacturer certificates.

D. Mill Certificates: For each type of bolt.

1.4 QUALITY ASSURANCE

A. Manufacturer Qualifications: A manufacturer certified by the Steel Joist Institute (SJI) to manufacture joists complying with SJI standard specifications and load tables.

B. SJI Specifications: Comply with SJI's "Standard Specifications, Load Tables and Weight Tables for Steel Joists and Joist Girders" (hereafter, SJI's "Specifications") that are applicable to types of joists indicated.

C. Welding: Qualify procedures and personnel according to AWS D1.1/D1.1M, "Structural Welding Code - Steel."

1.5 DELIVERY, STORAGE, AND HANDLING

A. Deliver, store, and handle joists as recommended in SJI's "Specifications."

B. Do not store joists in contact with the ground.

PART 2 - PRODUCTS

2.1 MATERIALS

A. Steel: Comply with SJI's "Specifications" for web and steel-angle chord members.

B. Carbon-Steel Bolts and Threaded Fasteners: ASTM A 307, Grade A (ASTM F 568M, Property Class 4.6), carbon-steel, hex-head bolts and threaded fasteners; carbon-steel nuts; and flat, unhardened steel washers.
1. Finish: Plain, uncoated.

C. High-Strength Bolts, Nuts, and Washers: ASTM A 325 (ASTM A 325M), Type 1, heavy hex steel structural bolts; ASTM A 563 (ASTM A 563M) heavy hex carbon-steel nuts; and ASTM F 436 (ASTM F 436M) hardened carbon-steel washers.
1. Finish: Plain.

2.2 K-SERIES STEEL JOISTS

A. Manufacture steel joists of type indicated according to "Standard Specifications for Open Web Steel Joists, K-Series" in SJI's "Specifications," with steel-angle top- and bottom-chord members, underslung ends, and parallel top chord.
1. Joist Type: K-series steel joists and KCS-type K-series steel joists.

B. Steel Joist Substitutes: Manufacture according to "Standard Specifications for Open Web Steel Joists, K-Series" in SJI's "Specifications," with steel-angle or -channel members.

2.3 JOIST ACCESSORIES

A. Bridging: Provide bridging anchors and number of rows of horizontal or diagonal bridging of material, size, and type required by SJI's "Specifications" for type of joist, chord size, spacing, and span. Furnish additional erection bridging if required for stability.

B. Bridging: Schematically indicated. Detail and fabricate according to SJI's "Specifications." Furnish additional erection bridging if required for stability.

C. Supply ceiling extensions, either extended bottom-chord elements or a separate extension unit of enough strength to support ceiling construction. Extend ends to within 1/2 inch (13 mm) of finished wall surface, unless otherwise indicated.

D. Supply miscellaneous accessories, including splice plates and bolts required by joist manufacturer to complete joist installation.

2.4 CLEANING AND SHOP PAINTING

A. Clean and remove loose scale, heavy rust, and other foreign materials from fabricated joists and accessories.

PART 3 - EXECUTION

3.1 INSTALLATION

A. Do not install joists until supporting construction is in place and secured.

B. Install joists and accessories plumb, square, and true to line; securely fasten to supporting construction according to SJI's "Specifications," joist manufacturer's written recommendations, and requirements in this Section.
   1. Before installation, splice joists delivered to Project site in more than one piece.
   2. Space, adjust, and align joists accurately in location before permanently fastening.
   3. Install temporary bracing and erection bridging, connections, and anchors to ensure that joists are stabilized during construction.

C. Field weld joists to supporting steel framework. Coordinate welding sequence and procedure with placement of joists. Comply with AWS requirements and procedures for welding, appearance and quality of welds, and methods used in correcting welding work.

D. Bolt joists to supporting steel framework using carbon-steel bolts.

E. Bolt joists to supporting steel framework using high-strength structural bolts. Comply with Research Council on Structural Connections' "Specification for Structural Joints Using ASTM A 325 or ASTM A 490 Bolts" for high-strength structural bolt installation and tightening requirements.

F. Install and connect bridging concurrently with joist erection, before construction loads are applied. Anchor ends of bridging lines at top and bottom chords if terminating at walls or beams.

3.2 FIELD QUALITY CONTROL

A. Testing Agency: Owner will engage a qualified independent testing and inspecting agency to inspect field welds and bolted connections and to perform field tests and inspections and prepare test and inspection reports.

END OF SECTION 05 2100

SECTION 05 3100 - STEEL DECKING

PART 1 - GENERAL

1.1 SUMMARY

A. This Section includes the following:
   1. Roof deck.
   2. Composite floor deck.
   3. Noncomposite form deck.

1.2 ACTION SUBMITTALS

A. Product Data: For each type of deck, accessory, and product indicated.

B. Shop Drawings:
   1. Include layout and types of deck panels, anchorage details, reinforcing channels, pans, cut deck openings, special jointing, accessories, and attachments to other construction.

1.3 INFORMATIONAL SUBMITTALS

A. Welding certificates.

B. Product Certificates: For each type of steel deck.

C. Product Test Reports: Based on evaluation of comprehensive tests performed by a qualified testing agency, indicating that each of the following complies with requirements:
   1. Power-actuated mechanical fasteners.

D. Evaluation Reports: For steel deck.

E. Field quality-control reports.

1.4 QUALITY ASSURANCE

A. Welding: Qualify procedures and personnel according to AWS D1.3, "Structural Welding Code - Sheet Steel."

B. Fire-Test-Response Characteristics: Where indicated, provide steel deck units identical to those tested for fire resistance per ASTM E 119 by a testing and inspecting agency acceptable to authorities having jurisdiction.
   1. Fire-Resistance Ratings: Indicated by design designations of applicable testing and inspecting agency.
   2. Steel deck units shall be identified with appropriate markings of applicable testing and inspecting agency.

C. AISI Specifications: Comply with calculated structural characteristics of steel deck according to AISI's "North American Specification for the Design of Cold-Formed Steel Structural Members."

1.5 DELIVERY, STORAGE, AND HANDLING

A. Protect steel deck from corrosion, deformation, and other damage during delivery, storage, and handling.

B. Stack steel deck on platforms or pallets and slope to provide drainage. Protect with a waterproof covering and ventilate to avoid condensation.

PART 2 - PRODUCTS

2.1 MANUFACTURERS

A. Available Manufacturers: Subject to compliance with requirements, manufacturers offering products that may be incorporated into the Work include, but are not limited to, the following:

B. Manufacturers: Subject to compliance with requirements, provide products by one of the following:
1. ASC Profiles, Inc.
2. Canam Steel Corp.;The Canam Manac Group.
3. Consolidated Systems, Inc.
4. DACS, Inc.
5. D-Mac Industries Inc.
6. Epic Metals Corporation.
7. Marlyn Steel Decks, Inc.
8. New Millennium Building Systems, LLC.
9. Nucor Corp.; Vulcraft Division.
10. Roof Deck, Inc.
11. United Steel Deck, Inc.
12. Valley Joist; Division of EBSCO Industries, Inc.
13. Verco Manufacturing Co.
14. Wheeling Corrugating Company; Div. of Wheeling-Pittsburgh Steel Corporation.

2.2 ROOF DECK

A. Steel Roof Deck: Fabricate panels, without top-flange stiffening grooves, to comply with "SDI Specifications and Commentary for Steel Roof Deck," in SDI Publication No. 30, and with the following:
1. Galvanized Steel Sheet: ASTM A653M, Structural Steel (SS), Grade 33 (230), G60 (Z180) zinc coating.
2. Deck Profile: As indicated.
3. Profile Depth: As indicated.
4. Design Uncoated-Steel Thickness: As indicated.

2.3 COMPOSITE FLOOR DECK

A. Composite Steel Floor Deck: Fabricate panels, with integrally embossed or raised pattern ribs and interlocking side laps, to comply with "SDI Specifications and Commentary for Composite Steel Floor Deck," in SDI Publication No. 30, with the minimum section properties indicated, and with the following:

1. Galvanized Steel Sheet: ASTM A 653/A 653M, Structural Steel (SS), Grade 33 (230), G60 (Z180) zinc coating.
2. Profile Depth: As indicated.
3. Design Uncoated-Steel Thickness: As indicated.

2.4 NONCOMPOSITE FORM DECK

A. Noncomposite Steel Form Deck: Fabricate ribbed-steel sheet noncomposite form-deck panels to comply with "SDI Specifications and Commentary for Noncomposite Steel Form Deck," in SDI Publication No. 30, with the minimum section properties indicated, and with the following:
   1. Prime-Painted Steel Sheet: ASTM A 1008/A 1008M, Structural Steel (SS), Grade 33 (230) minimum, with top and underside surface shop primed with manufacturer's standard baked-on, rust-inhibitive primer.
      a. Color: Manufacturer's standard.
   2. Profile Depth: 9/16 inch (14 mm).
   3. Design Uncoated-Steel Thickness: As indicated.
   4. Span Condition: Triple span or more.

2.5 ACCESSORIES

A. General: Provide manufacturer's standard accessory materials for deck that comply with requirements indicated.

B. Mechanical Fasteners: Corrosion-resistant, low-velocity, power-actuated or pneumatically driven carbon-steel fasteners; or self-drilling, self-threading screws.

C. Side-Lap Fasteners: Corrosion-resistant, hexagonal washer head; self-drilling, carbon-steel screws, No. 10 (4.8-mm) minimum diameter.

D. Flexible Closure Strips: Vulcanized, closed-cell, synthetic rubber.

E. Miscellaneous Sheet Metal Deck Accessories: Steel sheet, minimum yield strength of 33,000 psi (230 MPa), not less than 0.0359-inch (0.91-mm) design uncoated thickness, of same material and finish as deck; of profile indicated or required for application.

F. Repair Paint: Manufacturer's standard rust-inhibitive primer of same color as primer.

PART 3 - EXECUTION

3.1 INSTALLATION

A. Install deck panels and accessories according to applicable specifications and commentary in SDI Publication No. 30, manufacturer's written instructions, requirements in this Section, and as indicated.

B. Place deck panels on supporting frame and adjust to final position with ends accurately aligned and bearing on supporting frame before being permanently fastened. Do not stretch or contract side-lap interlocks.

C. Place deck panels flat and square and fasten to supporting frame without warp or deflection.

D. Cut and neatly fit deck panels and accessories around openings and other work projecting through or adjacent to deck.

E. Provide additional reinforcement and closure pieces at openings as required for strength, continuity of deck, and support of other work.

F. Comply with AWS requirements and procedures for manual shielded metal arc welding, appearance and quality of welds, and methods used for correcting welding work.

G. Mechanical fasteners may be used in lieu of welding to fasten deck. Locate mechanical fasteners and install according to deck manufacturer's written instructions.

H. End Bearing: Install deck ends over supporting frame with a minimum end bearing of 1½ inches (38 mm.)

I. Roof Sump Pans and Sump Plates: Install over openings provided in roof deck and mechanically fasten flanges to top of deck. Space mechanical fasteners not more than 12 inches (305 mm) apart with at least one fastener at each corner.
   1. Install reinforcing channels or zees in ribs to span between supports and mechanically fasten.

J. Miscellaneous Roof-Deck Accessories: Install ridge and valley plates, finish strips, end closures, and reinforcing channels according to deck manufacturer's written instructions. Mechanically fasten to substrate to provide a complete deck installation.
   1. Weld cover plates at changes in direction of roof-deck panels, unless otherwise indicated.

K. Pour Stops and Girder Fillers: Weld steel sheet pour stops and girder fillers to supporting structure according to SDI recommendations, unless otherwise indicated.

L. Floor-Deck Closures: Weld steel sheet column closures, cell closures, and Z-closures to deck, according to SDI recommendations, to provide tight-fitting closures at open ends of ribs and sides of deck.

3.2 FIELD QUALITY CONTROL

A. Testing Agency: Owner will engage a qualified independent testing and inspecting agency to perform field tests and inspections and prepare test reports.

B. Field welds will be subject to inspection.

C. Testing agency will report inspection results promptly and in writing to Contractor and Architect.

D. Remove and replace work that does not comply with specified requirements.

E. Additional inspecting, at Contractor's expense, will be performed to determine compliance of corrected work with specified requirements.

3.3 REPAIRS

A. Galvanizing Repairs: Prepare and repair damaged galvanized coatings on both surfaces of deck with galvanized repair paint according to ASTM A 780 and manufacturer's written instructions.

B. Repair Painting: Wire brush and clean rust spots, welds, and abraded areas on both surfaces of prime-painted deck immediately after installation, and apply repair paint.

END OF SECTION 05 3100

SECTION 05 4000 - COLD-FORMED METAL FRAMING

PART 1 - GENERAL

1.1 RELATED DOCUMENTS

A. Drawings and general provisions of the Contract, including General and Supplementary Conditions and Division 01 Specification Sections, apply to this Section.

1.2 SUMMARY

A. This Section includes the following:
   1. Exterior non-load-bearing wall framing.
   2. Ceiling joist framing.

B. Related Sections include the following:
   1. Division 05 Section "Metal Fabrications" for masonry shelf angles and connections.
   2. Division 09 Section "Non-Structural Metal Framing" for interior non-load-bearing, metal-stud framing and ceiling-suspension assemblies.
   3. Division 09 Section "Gypsum Board Shaft Wall Assemblies" for interior non-load-bearing, metal-stud-framed, shaft-wall assemblies.

1.3 PERFORMANCE REQUIREMENTS

A. Structural Performance: Provide cold-formed metal framing capable of withstanding design loads within limits and under conditions indicated. Gage of studs shown on documents is for bidding purposes only.
   1. Design Loads: Based on design parameters shown on Sheet S0.0.1 of structural drawings.
   2. Deflection Limits: Design framing systems to withstand design loads without deflections greater than the following:
      a. Exterior Non-Load-Bearing Framing: Horizontal deflection of 1/600 of the wall height.
      b. Ceiling Joist Framing: Vertical deflection of 1/360 of the span.
   3. Design framing systems to provide for movement of framing members without damage or overstressing, sheathing failure, connection failure, undue strain on fasteners and anchors, or other detrimental effects when subject to a maximum ambient temperature change of 120 deg F (67 deg C).
   4. Design framing system to maintain clearances at openings, to allow for construction tolerances, and to accommodate live load deflection of primary building structure as follows:
      a. Upward and downward movement of 3/4 inch (19 mm).

B. Cold-Formed Steel Framing, General: Design according to AISI's "Standard for Cold-Formed Steel Framing - General Provisions."
   1. Headers: Design according to AISI's "Standard for Cold-Formed Steel Framing - Header Design."
   2. Design exterior non-load-bearing wall framing to accommodate horizontal deflection without regard for contribution of sheathing materials.

1.4 ACTION SUBMITTALS

A. Product Data: For each type of cold-formed steel framing product and accessory.

B. Shop Drawings:
1. Include layout, spacings, sizes, thicknesses, and types of cold-formed steel framing; fabrication; and fastening and anchorage details, including mechanical fasteners.
2. Indicate reinforcing channels, opening framing, supplemental framing, strapping, bracing, bridging, splices, accessories, connection details, and attachment to adjoining work.

C. Delegated-Design Submittal: For cold-formed steel framing.

1.5 INFORMATIONAL SUBMITTALS

A. Qualification Data: For testing agency.

B. Welding certificates.

C. Product Test Reports: For each listed product, for tests performed by manufacturer and witnessed by a qualified testing agency.
1. Steel sheet.
2. Expansion anchors.
3. Power-actuated anchors.
4. Mechanical fasteners.
5. Vertical deflection clips.
6. Horizontal drift deflection clips
7. Miscellaneous structural clips and accessories.

D. Research Reports: For non-standard cold-formed steel framing, from ICC-ES.

1.6 QUALITY ASSURANCE

A. Engineering Responsibility: Preparation of Shop Drawings, design calculations, and other structural data by a qualified professional engineer.

B. Professional Engineer Qualifications: A professional engineer who is legally qualified to practice in jurisdiction where Project is located and who is experienced in providing engineering services of the kind indicated. Engineering services are defined as those performed for installations of cold-formed metal framing that are similar to those indicated for this Project in material, design, and extent.

C. Testing Agency Qualifications: An independent testing agency acceptable to authorities having jurisdiction, qualified according to ASTM E 329 to conduct the testing indicated.

D. Product Tests: Mill certificates or data from a qualified independent testing agency, or in-house testing with calibrated test equipment indicating steel sheet complies with requirements, including base-metal thickness, yield strength, tensile strength, total elongation, chemical requirements, and metallic-coating thickness.

E. Welding: Qualify procedures and personnel according to AWS D1.1/D1.1M, "Structural Welding Code--Steel," and AWS D1.3, "Structural Welding Code--Sheet Steel."

F. Fire-Test-Response Characteristics: Where indicated, provide cold-formed metal framing identical to that of assemblies tested for fire resistance per ASTM E 119 by a testing and inspecting agency acceptable to authorities having jurisdiction.

G. AISI Specifications and Standards: Comply with AISI's "North American Specification for the Design of Cold-Formed Steel Structural Members" and its "Standard for Cold-Formed Steel Framing - General Provisions."

1. Comply with AISI's "Standard for Cold-Formed Steel Framing - Header Design."

H. Preinstallation Conference: Conduct conference at Project site to comply with requirements in Division 01 Section "Project Management and Coordination."

1.7 DELIVERY, STORAGE, AND HANDLING

A. Protect cold-formed metal framing from corrosion, deformation, and other damage during delivery, storage, and handling.

B. Store cold-formed metal framing, protect with a waterproof covering, and ventilate to avoid condensation.

PART 2 - PRODUCTS

2.1 MANUFACTURERS

A. Available Manufacturers: Subject to compliance with requirements, manufacturers offering cold-formed metal framing that may be incorporated into the Work include, but are not limited to, the following:

B. Manufacturers: Subject to compliance with requirements, provide cold-formed metal framing by one of the following:
1. Allied Studco.
2. AllSteel Products, Inc.
3. California Expanded Metal Products Company.
4. Clark Steel Framing.
5. Consolidated Fabricators Corp.; Building Products Division.
6. Craco Metals Manufacturing, LLC.
7. Custom Stud, Inc.
8. Dale/Incor.
9. Design Shapes in Steel.
10. Dietrich Metal Framing; a Worthington Industries Company.
11. Formetal Co. Inc. (The).
12. Innovative Steel Systems.
13. MarinoWare; a division of Ware Industries.
14. Quail Run Building Materials, Inc.
15. SCAFCO Corporation.
16. Southeastern Stud & Components, Inc.
17. Steel Construction Systems.
18. Steeler, Inc.
19. Super Stud Building Products, Inc.
20. United Metal Products, Inc.

2.2 MATERIALS

A. Steel Sheet: ASTM A 1003/A 1003M, Structural Grade, Type H, metallic coated, of grade and coating weight as follows:
1. Grade: As required by structural performance.
2. Coating: G60.

B. Steel Sheet for Vertical Deflection Clips: ASTM A 653/A 653M, structural steel, zinc coated, of grade and coating as follows:
1. Grade: As required by structural performance.
2. Coating: G60 (Z275).

2.3 EXTERIOR NON-LOAD-BEARING WALL FRAMING

A. Steel Studs: Manufacturer's standard C-shaped steel studs, of web depths indicated, punched, with stiffened flanges, and as follows:
1. Minimum Base-Metal Thickness: As indicated.
2. Flange Width: 1-5/8 inches (41 mm).

B. Steel Track: Manufacturer's standard U-shaped steel track, of web depths indicated, unpunched, with unstiffened flanges, and as follows:
1. Minimum Base-Metal Thickness: Matching steel studs.
2. Flange Width: 1-1/4 inches (32 mm).

C. Vertical Deflection Clips: Manufacturer's standard bypass or head clips, capable of accommodating upward and downward vertical displacement of primary structure through positive mechanical attachment to stud web.
1. Available Manufacturers: Subject to compliance with requirements, manufacturers offering products that may be incorporated into the Work include, but are not limited to, the following:
2. Manufacturers: Subject to compliance with requirements, provide products by one of the following:
a. Dietrich Metal Framing; a Worthington Industries Company.
b. MarinoWare, a division of Ware Industries.
c. SCAFCO Corporation
d. The Steel Network, Inc.

D. Single Deflection Track: Manufacturer's single, deep-leg, U-shaped steel track; unpunched, with unstiffened flanges, of web depth to contain studs while allowing free vertical movement, with flanges designed to support horizontal and lateral loads and transfer them to the primary structure, and as follows:
1. Available Manufacturers: Subject to compliance with requirements, manufacturers offering products that may be incorporated into the Work include, but are not limited to, the following:
2. Minimum Base-Metal Thickness: As indicated.
3. Flange Width: 1 inch (25 mm) plus the design gap for 1-story structures and 1 inch (25 mm) plus twice the design gap for other applications.

E. Drift Clips: Manufacturer's standard bypass or head clips, capable of isolating wall stud from upward and downward vertical displacement and lateral drift of primary structure.

2.4 CEILING JOIST FRAMING

A. Steel Ceiling Joists: Manufacturer's standard C-shaped steel sections, of web depths indicated, unpunched, with stiffened flanges, and as follows:
1. Minimum Base-Metal Thickness: 0.0538 inch (1.37 mm).
2. Flange Width: 1-5/8 inches (41 mm), minimum.

2.5 FRAMING ACCESSORIES

A. Fabricate steel-framing accessories from steel sheet, ASTM A 1003/A 1003M, Structural Grade, Type H, metallic coated, of same grade and coating weight used for framing members.

B. Provide accessories of manufacturer's standard thickness and configuration, unless otherwise indicated, as follows:
1. Supplementary framing.
2. Bracing, bridging, and solid blocking.
3. Web stiffeners.
4. Anchor clips.
5. End clips.
6. Foundation clips.
7. Gusset plates.
8. Stud kickers, knee braces, and girts.
9. Joist hangers and end closures.
10. Hole reinforcing plates.
11. Backer plates.

2.6 ANCHORS, CLIPS, AND FASTENERS

A. Steel Shapes and Clips: ASTM A 36/A 36M, zinc coated by hot-dip process according to ASTM A 123/A 123M.

B. Anchor Bolts: ASTM F 1554, Grade 36, threaded carbon-steel hex-headed bolts and carbon-steel nuts; and flat, hardened-steel washers; zinc coated by hot-dip process according to ASTM A 153/A 153M, Class C.

C. Expansion Anchors: Fabricated from corrosion-resistant materials, with capability to sustain, without failure, a load equal to 5 times design load, as determined by testing per ASTM E 488 conducted by a qualified independent testing agency.

D. Power-Actuated Anchors: Fastener system of type suitable for application indicated, fabricated from corrosion-resistant materials, with capability to sustain, without failure, a load equal to 10 times design load, as determined by testing per ASTM E 1190 conducted by a qualified independent testing agency.

E. Mechanical Fasteners: ASTM C 1513, corrosion-resistant-coated, self-drilling, self-tapping steel drill screws.

1. Head Type: Low-profile head beneath sheathing, manufacturer's standard elsewhere.

F. Welding Electrodes: Comply with AWS standards.

2.7 MISCELLANEOUS MATERIALS

A. Galvanizing Repair Paint: ASTM A 780.

B. Cement Grout: Portland cement, ASTM C 150, Type I; and clean, natural sand, ASTM C 404. Mix at ratio of 1 part cement to 2-1/2 parts sand, by volume, with minimum water required for placement and hydration.

C. Nonmetallic, Nonshrink Grout: Premixed, nonmetallic, noncorrosive, nonstaining grout containing selected silica sands, portland cement, shrinkage-compensating agents, and plasticizing and water-reducing agents, complying with ASTM C 1107, with fluid consistency and 30-minute working time.

D. Shims: Load bearing, high-density multimonomer plastic, nonleaching.

E. Sealer Gaskets: Closed-cell neoprene foam, 1/4 inch (6.4 mm) thick, selected from manufacturer's standard widths to match width of bottom track or rim track members.

2.8 FABRICATION

A. Fabricate cold-formed metal framing and accessories plumb, square, and true to line, and with connections securely fastened, according to referenced AISI's specifications and standards, manufacturer's written instructions, and requirements in this Section.
   1. Fabricate framing assemblies using jigs or templates.
   2. Cut framing members by sawing or shearing; do not torch cut.
   3. Fasten cold-formed metal framing members by welding, screw fastening, clinch fastening, or riveting as standard with fabricator. Wire tying of framing members is not permitted.
      a. Comply with AWS D1.3 requirements and procedures for welding, appearance and quality of welds, and methods used in correcting welding work.
      b. Locate mechanical fasteners and install according to Shop Drawings, with screw penetrating joined members by not less than three exposed screw threads.
   4. Fasten other materials to cold-formed metal framing by welding, bolting, or screw fastening, according to Shop Drawings.

B. Reinforce, stiffen, and brace framing assemblies to withstand handling, delivery, and erection stresses. Lift fabricated assemblies to prevent damage or permanent distortion.

C. Fabrication Tolerances: Fabricate assemblies level, plumb, and true to line to a maximum allowable tolerance variation of 1/8 inch in 10 feet (1:960) and as follows:
   1. Spacing: Space individual framing members no more than plus or minus 1/8 inch (3 mm) from plan location. Cumulative error shall not exceed minimum fastening requirements of sheathing or other finishing materials.
   2. Squareness: Fabricate each cold-formed metal framing assembly to a maximum out-of-square tolerance of 1/8 inch (3 mm).

PART 3 - EXECUTION

3.1 EXAMINATION

A. Examine supporting substrates and abutting structural framing for compliance with requirements for installation tolerances and other conditions affecting performance.
   1. Proceed with installation only after unsatisfactory conditions have been corrected.

3.2 PREPARATION

A. Before sprayed fire-resistive materials are applied, attach continuous angles, supplementary framing, or tracks to structural members indicated to receive sprayed fire-resistive materials.

B. After applying sprayed fire-resistive materials, remove only as much of these materials as needed to complete installation of cold-formed framing without reducing thickness of fire-resistive materials below that are required to obtain fire-resistance rating indicated. Protect remaining fire-resistive materials from damage.

C. Install load bearing shims or grout between the underside of wall bottom track or rim track and the top of foundation wall or slab at stud or joist locations to ensure a uniform bearing surface on supporting concrete or masonry construction.

D. Install sealer gaskets to isolate the underside of wall bottom track or rim track and the top of foundation wall or slab at stud or joist locations.

3.3 INSTALLATION, GENERAL

A. Cold-formed metal framing may be shop or field fabricated for installation, or it may be field assembled.

B. Install cold-formed metal framing according to AISI's "Standard for Cold-Formed Steel Framing - General Provisions" and to manufacturer's written instructions unless more stringent requirements are indicated.

C. Install shop- or field-fabricated, cold-formed framing and securely anchor to supporting structure.

1. Screw, bolt, or weld wall panels at horizontal and vertical junctures to produce flush, even, true-to-line joints with maximum variation in plane and true position between fabricated panels not exceeding 1/16 inch (1.6 mm).

D. Install cold-formed metal framing and accessories plumb, square, and true to line, and with connections securely fastened.

1. Cut framing members by sawing or shearing; do not torch cut.

2. Fasten cold-formed metal framing members by welding, screw fastening, clinch fastening, or riveting. Wire tying of framing members is not permitted.
   a. Comply with AWS D1.3 requirements and procedures for welding, appearance and quality of welds, and methods used in correcting welding work.
   b. Locate mechanical fasteners and install according to Shop Drawings, and complying with requirements for spacing, edge distances, and screw penetration.
   c. Touch up paint all welds.

E. Install framing members in one-piece lengths unless splice connections are indicated for track or tension members.

F. Install temporary bracing and supports to secure framing and support loads comparable in intensity to those for which structure was designed. Maintain braces and supports in place, undisturbed, until entire integrated supporting structure has been completed and permanent connections to framing are secured.

G. Do not bridge building expansion and control joints with cold-formed metal framing. Independently frame both sides of joints.

H. Install insulation, specified in Division 07 Section "Thermal Insulation," in built-up exterior framing members, such as headers, sills, boxed joists, and multiple studs at openings, that are inaccessible on completion of framing work.

I. Fasten hole reinforcing plate over web penetrations that exceed size of manufacturer's standard punched openings.

J. Erection Tolerances: Install cold-formed metal framing level, plumb, and true to line to a maximum allowable tolerance variation of 1/8 inch in 10 feet (1:960) and as follows:

1. Space individual framing members no more than plus or minus 1/8 inch (3 mm) from plan location. Cumulative error shall not exceed minimum fastening requirements of sheathing or other finishing materials.

3.4 EXTERIOR NON-LOAD-BEARING WALL INSTALLATION

A. Install continuous tracks sized to match studs. Align tracks accurately and securely anchor to supporting structure as indicated.

B. Fasten both flanges of studs to top and bottom track, unless otherwise indicated. Space studs as follows:

1. Stud Spacing: As indicated.

C. Set studs plumb, except as needed for diagonal bracing or required for nonplumb walls or warped surfaces and similar requirements.

D. Isolate non-load-bearing steel framing from building structure to prevent transfer of vertical loads while providing lateral support.

1. Install single-leg deflection tracks and anchor to building structure.
2. Install double deep-leg deflection tracks and anchor outer track to building structure.
3. Connect vertical deflection clips to bypassing studs and anchor to building structure.
4. Connect drift clips to cold formed metal framing and anchor to building structure.

E. Install horizontal bridging in wall studs, spaced in rows indicated on Shop Drawings but not more than 48 inches (1220 mm) apart. Fasten at each stud intersection.

1. Top Bridging for Single Deflection Track: Install row of horizontal bridging within 12 inches (305 mm) of single deflection track. Install a combination of flat, taut, steel sheet straps of width and thickness indicated and stud or stud-track solid blocking of width and thickness matching studs. Fasten flat straps to stud flanges and secure solid blocking to stud webs or flanges.

a. Install solid blocking at 96-inch (2440-mm) centers.

2. Bridging: Proprietary bridging bars installed according to manufacturer's written instructions.

F. Install miscellaneous framing and connections, including stud kickers, web stiffeners, clip angles, continuous angles, anchors, fasteners, and stud girts, to provide a complete and stable wall-framing system.

3.5 FIELD QUALITY CONTROL

A. Testing: Owner will engage a qualified independent testing and inspecting agency to perform field tests and inspections and prepare test reports.

B. Field and shop welds will be subject to testing and inspecting.

C. Testing agency will report test results promptly and in writing to Contractor and Architect.

D. Remove and replace work where test results indicate that it does not comply with specified requirements.

E. Additional testing and inspecting, at Contractor's expense, will be performed to determine compliance of replaced or additional work with specified requirements.

3.6 REPAIRS AND PROTECTION

A. Galvanizing Repairs: Prepare and repair damaged galvanized coatings on fabricated and installed cold-formed metal framing with galvanized repair paint according to ASTM A 780 and manufacturer's written instructions.

B. Provide final protection and maintain conditions, in a manner acceptable to manufacturer and Installer, that ensure that cold-formed metal framing is without damage or deterioration at time of Substantial Completion.

END OF SECTION 05 4000

SECTION 05 5000 - METAL FABRICATIONS

PART 1 - GENERAL

1.1 RELATED DOCUMENTS

A. Drawings and general provisions of the Contract, including General and Supplementary Conditions and Division 01 Specification Sections, apply to this Section.

1.2 SUMMARY

A. Section Includes:

1. Steel framing and supports for operable partitions.

2. Steel framing and supports for suspended ceiling clouds.
3. Steel framing and supports for overhead doors.
4. Steel framing and supports for countertops.
5. Steel framing and supports for mechanical and electrical equipment.
6. Steel framing and supports for applications where framing and supports are not specified in other Sections.
7. Metal bollards.
8. Steel ladders.
9. Loose bearing and leveling plates for applications where they are not specified in other Sections.

B. Products furnished, but not installed, under this Section:

1. Loose steel lintels.

C. Related Sections:

1. Division 03 Section "Cast-in-Place Concrete" for installing anchor bolts, steel pipe sleeves, slotted-channel inserts, wedge-type inserts, and other items cast into concrete.
2. Division 04 Section "Unit Masonry" for installing loose lintels, anchor bolts, and other items built into unit masonry.
3. Division 05 Section "Structural Steel Framing."
4. Division 05 Section "Metal Stairs."
5. Division 05 Section "Pipe and Tube Railings."
6. Division 12 Section "Site Furnishings" for bicycle racks.

1.3 PERFORMANCE REQUIREMENTS

A. Thermal Movements: Allow for thermal movements from ambient and surface temperature changes acting on exterior metal fabrications by preventing buckling, opening of joints, overstressing of components, failure of connections, and other detrimental effects.

1. Temperature Change: 120 deg F (67 deg C), ambient; 180 deg F (100 deg C), material surfaces.

1.4 ACTION SUBMITTALS

A. Shop Drawings: Show fabrication and installation details for metal fabrications.

1. Include plans, elevations, sections, and details of metal fabrications and their connections. Show anchorage and accessory items.

1.5 INFORMATIONAL SUBMITTALS

A. Welding certificates.

1.6 QUALITY ASSURANCE

A. Welding Qualifications: Qualify procedures and personnel according to AWS D1.1/D1.1M, "Structural Welding Code - Steel."

B. Welding Qualifications: Qualify procedures and personnel according to the following:

1. AWS D1.1/D1.1M, "Structural Welding Code - Steel."
2. AWS D1.2/D1.2M, "Structural Welding Code - Aluminum."
3. AWS D1.6, "Structural Welding Code - Stainless Steel."

1.7 PROJECT CONDITIONS

A. Field Measurements: Verify actual locations of walls and other construction contiguous with metal fabrications by field measurements before fabrication.

1.8 COORDINATION

A. Coordinate selection of shop primers with topcoats to be applied over them. Comply with paint and coating manufacturers' written recommendations to ensure that shop primers and topcoats are compatible with one another.

B. Coordinate installation of anchorages. Furnish setting drawings, templates, and directions for installing anchorages, including sleeves, concrete inserts, anchor bolts, and items with integral anchors, that are to be embedded in concrete or masonry. Deliver such items to Project site in time for installation.

PART 2 - PRODUCTS

2.1 METALS, GENERAL

A. Metal Surfaces, General: Provide materials with smooth, flat surfaces unless otherwise indicated. For metal fabrications exposed to view in the completed Work, provide materials without seam marks, roller marks, rolled trade names, or blemishes.

2.2 FERROUS METALS

A. Recycled Content of Steel Products: Postconsumer recycled content plus one-half of preconsumer recycled content not less than 25 percent.

B. Steel Plates, Shapes, and Bars: ASTM A 36/A 36M.

C. Stainless-Steel Sheet, Strip, and Plate: ASTM A 240/A 240M or ASTM A 666, Type 304.

D. Stainless-Steel Bars and Shapes: ASTM A 276, Type 304.

E. Steel Pipe: ASTM A 53/A 53M, standard weight (Schedule 40) unless otherwise indicated.

2.3 NONFERROUS METALS

A. Aluminum Plate and Sheet: ASTM B 209 (ASTM B 209M), Alloy 6061-T6.

B. Aluminum Extrusions: ASTM B 221 (ASTM B 221M), Alloy 6063-T6.

C. Aluminum Castings: ASTM B 26/B 26M, Alloy 443.0-F.

2.4 FASTENERS

A. General: Unless otherwise indicated, provide Type 304 stainless-steel fasteners for exterior use and zinc-plated fasteners with coating complying with ASTM B 633 or ASTM F 1941 (ASTM F 1941M), Class Fe/Zn 5, at exterior walls. Select fasteners for type, grade, and class required.

1. Provide stainless-steel fasteners for fastening aluminum.
2. Provide stainless-steel fasteners for fastening stainless steel.

B. Steel Bolts and Nuts: Regular hexagon-head bolts, ASTM A 307, Grade A (ASTM F 568M, Property Class 4.6); with hex nuts, ASTM A 563 (ASTM A 563M); and, where indicated, flat washers.

C. Stainless-Steel Bolts and Nuts: Regular hexagon-head annealed stainless-steel bolts, ASTM F 593 (ASTM F 738M); with hex nuts, ASTM F 594 (ASTM F 836M); and, where indicated, flat washers; Alloy Group 2 (A4).

D. Anchor Bolts: ASTM F 1554, Grade 36, of dimensions indicated; with nuts, ASTM A 563; and, where indicated, flat washers.

1. Hot-dip galvanize or provide mechanically deposited, zinc coating where item being fastened is indicated to be galvanized.

E. Eyebolts: ASTM A 489.

F. Machine Screws: ASME B18.6.3 (ASME B18.6.7M).

G. Lag Screws: ASME B18.2.1 (ASME B18.2.3.8M).

H. Wood Screws: Flat head, ASME B18.6.1.

I. Plain Washers: Round, ASME B18.22.1 (ASME B18.22M).

J. Lock Washers: Helical, spring type, ASME B18.21.1 (ASME B18.21.2M).

K. Anchors, General: Anchors capable of sustaining, without failure, a load equal to six times the load imposed when installed in unit masonry and four times the load imposed when installed in concrete, as determined by testing according to ASTM E 488, conducted by a qualified independent testing agency.

L. Cast-in-Place Anchors in Concrete: Either threaded type or wedge type unless otherwise indicated; galvanized ferrous castings, either ASTM A 47/A 47M malleable iron or ASTM A 27/A 27M cast steel. Provide bolts, washers, and shims as needed, all hot-dip galvanized per ASTM F 2329.

M. Post-Installed Anchors: Torque-controlled expansion anchors or chemical anchors.

1. Material for Interior Locations: Carbon-steel components zinc plated to comply with ASTM B 633 or ASTM F 1941 (ASTM F 1941M), Class Fe/Zn 5, unless otherwise indicated.
2. Material for Exterior Locations and Where Stainless Steel is Indicated: Alloy Group 2 (A4) stainless-steel bolts, ASTM F 593 (ASTM F 738M), and nuts, ASTM F 594 (ASTM F 836M).

2.5 MISCELLANEOUS MATERIALS

A. Welding Rods and Bare Electrodes: Select according to AWS specifications for metal alloy welded.

B. Shop Primers: Provide primers that comply with Division 09 painting Sections.

C. Galvanizing Repair Paint: High-zinc-dust-content paint complying with SSPC-Paint 20 and compatible with paints specified to be used over it.

D. Bituminous Paint: Cold-applied asphalt emulsion complying with ASTM D 1187.

E. Nonshrink, Metallic Grout: Factory-packaged, ferrous-aggregate grout complying with ASTM C 1107, specifically recommended by manufacturer for heavy-duty loading applications.

F. Nonshrink, Nonmetallic Grout: Factory-packaged, nonstaining, noncorrosive, nongaseous grout complying with ASTM C 1107. Provide grout specifically recommended by manufacturer for interior and exterior applications.

G. Concrete: Comply with requirements in Division 03 Section "Cast-in-Place Concrete" for normal-weight, air-entrained, concrete with a minimum 28-day compressive strength of 3000 psi (20 MPa).

2.6 FABRICATION, GENERAL

A. Shop Assembly: Preassemble items in the shop to greatest extent possible. Disassemble units only as necessary for shipping and handling limitations. Use connections that maintain structural value of joined pieces. Clearly mark units for reassembly and coordinated installation.

B. Cut, drill, and punch metals cleanly and accurately. Remove burrs and ease edges to a radius of approximately 1/32 inch (1 mm) unless otherwise indicated. Remove sharp or rough areas on exposed surfaces.

C. Form bent-metal corners to smallest radius possible without causing grain separation or otherwise impairing work.

D. Form exposed work with accurate angles and surfaces and straight edges.

E. Weld corners and seams continuously to comply with the following:

1. Use materials and methods that minimize distortion and develop strength and corrosion resistance of base metals.
2. Obtain fusion without undercut or overlap.
3. Remove welding flux immediately.
4. At exposed connections, finish exposed welds and surfaces smooth and blended so no roughness shows after finishing and contour of welded surface matches that of adjacent surface.

F. Form exposed connections with hairline joints, flush and smooth, using concealed fasteners or welds where possible. Where exposed fasteners are required, use Phillips flat-head (countersunk) fasteners unless otherwise indicated. Locate joints where least conspicuous.

G. Fabricate seams and other connections that will be exposed to weather in a manner to exclude water. Provide weep holes where water may accumulate.

H. Cut, reinforce, drill, and tap metal fabrications as indicated to receive finish hardware, screws, and similar items.

I. Provide for anchorage of type indicated; coordinate with supporting structure. Space anchoring devices to secure metal fabrications rigidly in place and to support indicated loads.

1. Where units are indicated to be cast into concrete or built into masonry, equip with integrally welded steel strap anchors, 1/8 by 1-1/2 inches (3.2 by 38 mm), with a minimum 6-inch (150-mm) embedment and 2-inch (50-mm) hook, not less than 8 inches (200 mm) from ends and corners of units and 24 inches (600 mm) o.c., unless otherwise indicated.

2.7 MISCELLANEOUS FRAMING AND SUPPORTS

A. General: Provide steel framing and supports not specified in other Sections as needed to complete the Work.

B. Fabricate units from steel shapes, plates, and bars of welded construction unless otherwise indicated. Fabricate to sizes, shapes, and profiles indicated and as necessary to receive adjacent construction.

1. Furnish inserts for units installed after concrete is placed.

C. Fabricate supports for operable partitions from continuous steel beams of sizes indicated with attached bearing plates, anchors, and braces as recommended by partition manufacturer. Drill or punch bottom flanges of beams to receive partition track hanger rods; locate holes where indicated on operable partition Shop Drawings.

D. Fabricate supports for suspended ceiling clouds from continuous beams of sizes indicated with attached bearing plates, anchors, angle brackets to provide connection to masonry or metal framed partitions.

E. Galvanize miscellaneous framing and supports where indicated.

2.8 MISCELLANEOUS STEEL TRIM

A. Unless otherwise indicated, fabricate units from steel shapes, plates, and bars of profiles shown with continuously welded joints and smooth exposed edges. Miter corners and use concealed field splices where possible.

B. Galvanize exterior miscellaneous steel trim.

2.9 METAL BOLLARDS

A. Fabricate metal bollards from Schedule 80 steel pipe.

B. Galvanize bollards.

2.10 LOOSE BEARING AND LEVELING PLATES

A. Provide loose bearing and leveling plates for steel items bearing on masonry or concrete construction. Drill plates to receive anchor bolts and for grouting.

B. Galvanize plates.

2.11 LOOSE STEEL LINTELS

A. Fabricate loose steel lintels from steel angles and shapes of size indicated for openings and recesses in masonry walls and partitions at locations indicated. Fabricate in single lengths for each opening unless otherwise indicated. Weld adjoining members together to form a single unit where indicated.

B. Size loose lintels to provide bearing length at each side of openings equal to 1/12 of clear span but not less than 8 inches (200 mm) unless otherwise indicated.

C. Galvanize loose steel lintels located in exterior walls.

2.12 STEEL WELD PLATES AND ANGLES

A. Provide steel weld plates and angles not specified in other Sections, for items supported from concrete construction as needed to complete the Work. Provide each unit with no fewer than two integrally welded steel strap anchors for embedding in concrete.

2.13 STEEL LADDERS

A. Materials:
1. Fasteners: Manufacturer's standard.
2. Fittings, Connectors and Rung Ends: Manufacturer's standard.

B. Fabrication:

1. Vertical Fixed Wall Ladders: Minimum 20-1/4 inches wide; steel serrated rungs minimum 1-1/8 inches in diameter, connected to minimum 2-1/2 inch steel side rail channels; mounting brackets minimum 1/4 inches thick.
a. Brackets: Wall supported brackets.

2.14 FINISHES, GENERAL

A. Comply with NAAMM's "Metal Finishes Manual for Architectural and Metal Products" for recommendations for applying and designating finishes.

B. Finish metal fabrications after assembly.

C. Finish exposed surfaces to remove tool and die marks and stretch lines, and to blend into surrounding surface.

2.15 STEEL AND IRON FINISHES

A. Galvanizing: Hot-dip galvanize items as indicated to comply with ASTM A 153/A 153M for steel and iron hardware and with ASTM A 123/A 123M for other steel and iron products.

1. Do not quench or apply post galvanizing treatments that might interfere with paint adhesion.

B. Shop prime iron and steel items not indicated to be galvanized unless they are to be embedded in concrete, sprayed-on fireproofing, or masonry, or unless otherwise indicated.

C. Preparation for Shop Priming: Prepare surfaces to comply with requirements indicated below:

1. Exterior Items: SSPC-SP 6/NACE No. 3, "Commercial Blast Cleaning."
2. Other Items: SSPC-SP 3, "Power Tool Cleaning."

D. Shop Priming: Apply shop primer to comply with SSPC-PA 1, "Paint Application Specification No. 1: Shop, Field, and Maintenance Painting of Steel," for shop painting.

1. Stripe paint corners, crevices, bolts, welds, and sharp edges.

2.16 ALUMINUM FINISHES

A. Finish designations prefixed by AA comply with the system established by the Aluminum Association for designating aluminum finishes.

B. Class I, Clear Anodic Finish: AA-M12C22A41 (Mechanical Finish: nonspecular as fabricated; Chemical Finish: etched, medium matte; Anodic Coating: Architectural Class I, clear coating 0.018 mm or thicker) complying with AAMA 611.

PART 3 - EXECUTION

3.1 INSTALLATION, GENERAL

A. Cutting, Fitting, and Placement: Perform cutting, drilling, and fitting required for installing metal fabrications. Set metal fabrications accurately in location, alignment, and elevation; with edges and surfaces level, plumb, true, and free of rack; and measured from established lines and levels.

B. Fit exposed connections accurately together to form hairline joints. Weld connections that are not to be left as exposed joints but cannot be shop welded because of shipping size limitations. Do not weld, cut, or abrade surfaces of exterior units that have been hot-dip galvanized after fabrication and are for bolted or screwed field connections.

C. Field Welding: Comply with the following requirements:

1. Use materials and methods that minimize distortion and develop strength and corrosion resistance of base metals.
2. Obtain fusion without undercut or overlap.
3. Remove welding flux immediately.
4. At exposed connections, finish exposed welds and surfaces smooth and blended so no roughness shows after finishing and contour of welded surface matches that of adjacent surface.

D. Fastening to In-Place Construction: Provide anchorage devices and fasteners where metal fabrications are required to be fastened to in-place construction. Provide threaded fasteners for use with concrete and masonry inserts, toggle bolts, through bolts, lag screws, wood screws, and other connectors.

E. Provide temporary bracing or anchors in formwork for items that are to be built into concrete, masonry, or similar construction.

F. Corrosion Protection: Coat concealed surfaces of aluminum that will come into contact with grout, concrete, masonry, wood, or dissimilar metals with the following:

1. Cast Aluminum: Heavy coat of bituminous paint.
2. Extruded Aluminum: Two coats of clear lacquer.

3.2 INSTALLING MISCELLANEOUS FRAMING AND SUPPORTS

A. General: Install framing and supports to comply with requirements of items being supported, including manufacturers' written instructions and requirements indicated on Shop Drawings.

B. Anchor supports for operable partitions securely to and rigidly brace from building structure.

3.3 INSTALLING METAL BOLLARDS

A. Anchor bollards in place with concrete footings. Center and align bollards in holes 3 inches (75 mm) above bottom of excavation. Place concrete and vibrate or tamp for consolidation. Support and brace bollards in position until concrete has cured.

B. Fill bollards solidly with concrete, mounding top surface to shed water.

3.4 INSTALLING BEARING AND LEVELING PLATES

A. Clean concrete and masonry bearing surfaces of bond-reducing materials, and roughen to improve bond to surfaces. Clean bottom surface of plates.

B. Set bearing and leveling plates on wedges, shims, or leveling nuts. After bearing members have been positioned and plumbed, tighten anchor bolts. Do not remove wedges or shims but, if protruding, cut off flush with edge of bearing plate before packing with grout.

1. Use nonshrink grout, either metallic or nonmetallic, in concealed locations where not exposed to moisture; use nonshrink, nonmetallic grout in exposed locations unless otherwise indicated.
2. Pack grout solidly between bearing surfaces and plates to ensure that no voids remain.

3.5 INSTALLING LADDERS

A. Fastening to In-Place Construction: provide anchorage devices and fasteners where necessary for securing steel stairs to in-place construction; include threaded fasteners for concrete and masonry inserts, through-bolts, lag bolts, and other connectors as required.

B. Cutting, Fitting and Placement: Perform cutting, drilling and fitting required for installing steel stairs. Set units accurately in location, alignment and elevation; with edges and surfaces level, plumb, true and free of rack; and measured from established lines and levels.

C. Provide temporary bracing or anchors in formwork for items that are to be built into concrete masonry or similar construction.

D. Fit exposed connections accurately together to form hairline joints. Weld connections that are not to be left as exposed joints, but cannot be shop welded because or shipping size limitations. Do not weld, cut or abrade the surface or exterior units which have been hot-dip galvanized after fabrication, and are intended for bolted or screwed field connections.

3.6 ADJUSTING AND CLEANING

A. Touchup Painting: Immediately after erection, clean field welds, bolted connections, and abraded areas. Paint uncoated and abraded areas with the same material as used for shop painting to comply with SSPC-PA 1 for touching up shop-painted surfaces.

1. Apply by brush or spray to provide a minimum 2.0-mil (0.05-mm) dry film thickness.

B. Touchup Painting: Cleaning and touchup painting of field welds, bolted connections, and abraded areas of shop paint are specified in Division 09 painting Sections.

C. Galvanized Surfaces: Clean field welds, bolted connections, and abraded areas and repair galvanizing to comply with ASTM A 780.

END OF SECTION 05 5000

SECTION 05 5100 - METAL STAIRS

PART 1 - GENERAL

1.1 RELATED DOCUMENTS

A. Drawings and general provisions of the Contract, including General and Supplementary Conditions and Division 01 Specification Sections, apply to this Section.

1.2 SUMMARY

A. Section Includes:

1. Industrial-type stairs with steel grating treads.

B. Related Sections:

1. Division 03 Section "Cast-in-Place Concrete" for concrete fill for stair treads and platforms.
2. Division 05 Section "Pipe and Tube Railings" for pipe and tube railings.
3. Division 06 Section "Miscellaneous Rough Carpentry" for wood blocking for anchoring railings.

1.3 PERFORMANCE REQUIREMENTS

A. Delegated Design: Design metal stairs, including comprehensive engineering analysis by a qualified professional engineer, using performance requirements and design criteria indicated.

B. Structural Performance of Stairs: Metal stairs shall withstand the effects of gravity loads and the following loads and stresses within limits and under conditions indicated.

1. Uniform Load: 100 lbf/sq. ft. (4.79 kN/sq. m).
2. Concentrated Load: 300 lbf (1.33 kN) applied on an area of 4 sq. in. (2580 sq. mm).
3. Uniform and concentrated loads need not be assumed to act concurrently.
4. Stair Framing: Capable of withstanding stresses resulting from railing loads in addition to loads specified above.
5. Limit deflection of treads, platforms, and framing members to L/240 or 1/4 inch (6.4 mm), whichever is less.

1.4 ACTION SUBMITTALS

A. Product Data: For metal stairs and the following:

1. Grating treads.
2. Abrasive nosings.
3. Paint products.

B. Shop Drawings: Include plans, elevations, sections, details, and attachments to other work.

C. Samples for Verification: For the following products, in manufacturer's standard sizes:

1. Grating treads.
2. Abrasive nosings.

D. Delegated-Design Submittal: For installed products indicated to comply with performance requirements and design criteria, including analysis data signed and sealed by the qualified professional engineer responsible for their preparation.

1.5 INFORMATIONAL SUBMITTALS

A. Qualification Data: For qualified professional engineer.

B. Welding certificates.

C. Product Test Reports: Based on evaluation of comprehensive tests performed by a qualified testing agency, for stairs.

1.6 QUALITY ASSURANCE

A. Installer Qualifications: Fabricator of products.

B. NAAMM Stair Standard: Comply with "Recommended Voluntary Minimum Standards for Fixed Metal Stairs" in NAAMM AMP 510, "Metal Stairs Manual," for class of stair designated, unless more stringent requirements are indicated.

1. Industrial-Type Stairs: Industrial class.

C. Welding Qualifications: Qualify procedures and personnel according to the following:

1. AWS D1.1/D1.1M, "Structural Welding Code - Steel."
2. AWS D1.3, "Structural Welding Code - Sheet Steel."

1.7 COORDINATION

A. Coordinate selection of shop primers with topcoats to be applied over them. Comply with paint and coating manufacturers' written recommendations to ensure that shop primers and topcoats are compatible with one another.

B. Coordinate installation of anchorages for metal stairs. Furnish setting drawings, templates, and directions for installing anchorages, including sleeves, concrete inserts, anchor bolts, and items with integral anchors, that are to be embedded in concrete or masonry. Deliver such items to Project site in time for installation.

C. Coordinate locations of hanger rods and struts with other work so that they will not encroach on required stair width and will be within the fire-resistance-rated stair enclosure.

PART 2 - PRODUCTS

2.1 METALS, GENERAL

A. Metal Surfaces, General: Provide materials with smooth, flat surfaces unless otherwise indicated. For components exposed to view in the completed Work, provide materials without seam marks, roller marks, rolled trade names, or blemishes.

2.2 FERROUS METALS

A. Recycled Content of Steel Products: Postconsumer recycled content plus one-half of preconsumer recycled content not less than [25] percent.

B. Steel Plates, Shapes, and Bars: ASTM A 36/A 36M.

C. Steel Bars for Grating Treads: ASTM A 36/A 36M or steel strip, ASTM A 1011/A 1011M or ASTM A 1018/A 1018M.

D. Wire Rod for Grating Crossbars: ASTM A 510 (ASTM A 510M).

E. Cast Iron: Either gray iron, ASTM A 48/A 48M, or malleable iron, ASTM A 47/A 47M, unless otherwise indicated.

F. Uncoated, Hot-Rolled Steel Sheet: ASTM A 1011/A 1011M, either commercial steel, Type B, or structural steel, Grade 30 (Grade 205), unless another grade is required by design loads.

2.3 ABRASIVE NOSINGS

A. Cast-Metal Units: Cast aluminum, with an integral abrasive, as-cast finish consisting of aluminum oxide, silicon carbide, or a combination of both. Fabricate units in lengths necessary to accurately fit openings or conditions.

1. Manufacturers: Subject to compliance with requirements, provide products by one of the following:

   a. American Safety Tread Co., Inc.
   b. Balco Inc.
   c. Barry Pattern & Foundry Co., Inc.
   d. Granite State Casting Co.
   e. Safe-T-Metal Company, Inc.
   f. Wooster Products Inc.

2. Configuration: Cross-hatched angle-shaped units, same depth as bar-grating treads and 1 to 1-1/2 inches (25 to 38 mm) wide.

B. Provide anchors for embedding units in concrete, either integral or applied to units, as standard with manufacturer.

C. Apply bituminous paint to concealed surfaces of cast-metal units set into concrete.

2.4 FASTENERS

A. General: Provide zinc-plated fasteners with coating complying with ASTM B 633 or ASTM F 1941 (ASTM F 1941M), Class Fe/Zn 12 for exterior use, and Class Fe/Zn 5 where built into exterior walls. Select fasteners for type, grade, and class required.

B. Bolts and Nuts: Regular hexagon-head bolts, ASTM A 307, Grade A (ASTM F 568M, Property Class 4.6); with hex nuts, ASTM A 563 (ASTM A 563M); and, where indicated, flat washers.

C. Anchor Bolts: ASTM F 1554, Grade 36, of dimensions indicated; with nuts, ASTM A 563 (ASTM A 563M); and, where indicated, flat washers.

D. Machine Screws: ASME B18.6.3 (ASME B18.6.7M).

E. Plain Washers: Round, ASME B18.22.1 (ASME B18.22M).

F. Lock Washers: Helical, spring type, ASME B18.21.1 (ASME B18.21.2M).

2.5 MISCELLANEOUS MATERIALS

A. Welding Rods and Bare Electrodes: Select according to AWS specifications for metal alloy welded.

B. Shop Primers: Provide primers that comply with Division 09 painting Sections.

C. Bituminous Paint: Cold-applied asphalt emulsion complying with ASTM D 1187.

2.6 FABRICATION, GENERAL

A. Provide complete stair assemblies, including metal framing, hangers, struts,clips, brackets, bearing plates, and other components necessary to support and anchor stairs and platforms on supporting structure.

1. Join components by welding unless otherwise indicated.
2. Use connections that maintain structural value of joined pieces.

B. Preassembled Stairs: Assemble stairs in shop to greatest extent possible. Disassemble units only as necessary for shipping and handling limitations. Clearly mark units for reassembly and coordinated installation.

C. Cut, drill, and punch metals cleanly and accurately. Remove burrs and ease edges to a radius of approximately 1/32 inch (1 mm) unless otherwise indicated. Remove sharp or rough areas on exposed surfaces.

D. Form bent-metal corners to smallest radius possible without causing grain separation or otherwise impairing work.

E. Form exposed work with accurate angles and surfaces and straight edges.

F. Weld connections to comply with the following:

1. Use materials and methods that minimize distortion and develop strength and corrosion resistance of base metals.
2. Obtain fusion without undercut or overlap.
3. Remove welding flux immediately.
4. Weld exposed corners and seams continuously unless otherwise indicated.
5. At exposed connections, finish exposed welds to comply with NOMMA's "Voluntary Joint Finish Standards" for Type 1 welds: no evidence of a welded joint.

G. Form exposed connections with hairline joints, flush and smooth, using concealed fasteners where possible. Where exposed fasteners are required, use Phillips flat-head (countersunk) screws or bolts unless otherwise indicated. Locate joints where least conspicuous.

2.7 STEEL-FRAMED STAIRS

A. Manufacturers: Subject to compliance with requirements, provide products by one of the following:

1. Alfab, Inc.
2. American Stair, Inc.
3. Sharon Companies Ltd. (The).

B. Stair Framing:

1. Fabricate stringers of steel channels, tubes or other shapes as indicated.

    a. Provide closures for exposed ends of tube stringers.

2. Construct platforms of steel channel or tube headers and miscellaneous framing members as needed to comply with performance requirements and as indicated.
3. Weld stringers to headers; weld framing members to stringers and headers.
4. Where masonry walls support metal stairs, provide temporary supporting struts designed for erecting steel stair components before installing masonry.

C. Metal Bar-Grating Stairs: Form treads and platforms to configurations shown from metal bar grating; fabricate to comply with NAAMM MBG 531, "Metal Bar Grating Manual."

1. Fabricate treads and platforms from welded or pressure-locked steel grating with 1-1/4-by-3/16-inch (32-by-5-mm) bearing bars at 15/16 inch (24 mm) o.c. and crossbars at 4 inches (100 mm) o.c.
2. Surface: Plain.
3. Finish: Shop primed.
4. Fabricate grating treads with cast abrasive nosing and with steel angle or steel plate carrier at each end for stringer connections. Secure treads to stringers with bolts.
5. Fabricate grating platforms with nosing matching that on grating treads. Provide toeplates at open-sided edges of grating platforms. Weld grating to platform framing.

2.8 STAIR RAILINGS

A. Comply with applicable requirements in Section 055213 "Pipe and Tube Railings

1. Rails may be bent at corners, rail returns, and wall returns, instead of using prefabricated fittings.
2. Connect posts to stair framing by direct welding unless otherwise indicated.
3. Provide 3/16 inch diameter, 1 x 19 construction stainless steel, type 316 cable railing infill as detailed, with cabling hardware including ferrules, receivers, and tensioners.

2.9 FINISHES

A. Comply with NAAMM's "Metal Finishes Manual for Architectural and Metal Products" for recommendations for applying and designating finishes.

B. Finish metal stairs after assembly.

C. Preparation for Shop Priming: Prepare uncoated ferrous-metal surfaces to comply with minimum requirements indicated below for SSPC surface preparation specifications and environmental exposure conditions of installed products:

1. Interior Stairs: SSPC-SP 3, "Power Tool Cleaning."

D. Apply shop primer to uncoated surfaces of metal stair components, except those with galvanized finishes and those to be embedded in concrete or masonry unless otherwise indicated. Comply with SSPC-PA 1, "Paint Application Specification No. 1: Shop, Field, and Maintenance Painting of Steel," for shop painting.

1. Stripe paint corners, crevices, bolts, welds, and sharp edges.

PART 3 - EXECUTION

3.1 INSTALLATION, GENERAL

A. Fastening to In-Place Construction: Provide anchorage devices and fasteners where necessary for securing metal stairs to in-place construction. Include threaded fasteners for concrete and masonry inserts, through-bolts, lag bolts, and other connectors.

B. Cutting, Fitting, and Placement: Perform cutting, drilling, and fitting required for installing metal stairs. Set units accurately in location, alignment, and elevation, measured from established lines and levels and free of rack.

C. Provide temporary bracing or anchors in formwork for items that are to be built into concrete, masonry, or similar construction.

D. Fit exposed connections accurately together to form hairline joints. Weld connections that are not to be left as exposed joints but cannot be shop welded because of shipping size limitations. Do not weld, cut, or abrade surfaces of exterior units that have been hot-dip galvanized after fabrication and are for bolted or screwed field connections.

E. Field Welding: Comply with requirements for welding in "Fabrication, General" Article.

3.2 ADJUSTING AND CLEANING

A. Touchup Painting: Cleaning and touchup painting of field welds, bolted connections, and abraded areas of shop paint are specified in Division 09 painting Sections.

END OF SECTION 05 5100

SECTION 055113 - METAL PAN STAIRS

PART 1 - GENERAL

1.1 RELATED DOCUMENTS

A. Drawings and general provisions of the Contract, including General and Supplementary Conditions and Division 01 Specification Sections, apply to this Section.

1.2 SUMMARY

A. Section Includes:

1. Preassembled steel stairs with concrete-filled pans and precast concrete treads.
2. Steel tube railings attached to metal stairs.

B. Related Requirements:

1. Section 033000 "Cast-in-Place Concrete" for concrete fill for stair treads and platforms.
2. Section 055213 "Pipe and Tube Railings" for pipe and tube railings.

1.3 COORDINATION

A. Coordinate selection of shop primers with topcoats to be applied over them. Comply with paint and coating manufacturers' written recommendations to ensure that shop primers and topcoats are compatible with one another.

B. Coordinate installation of anchorages for metal stairs. Furnish setting drawings, templates, and directions for installing anchorages, including sleeves, concrete inserts, anchor bolts, and items with integral anchors, that are to be embedded in concrete or masonry. Deliver such items to Project site in time for installation.

C. Coordinate locations of hanger rods and struts with other work so that they do not encroach on required stair width and are within the fire-resistance-rated stair enclosure.

1.4 ACTION SUBMITTALS

A. Product Data: For metal pan stairs and the following:

1. Precast concrete treads.

B. Shop Drawings: Include plans, elevations, sections, details, and attachments to other work.

1.5 INFORMATIONAL SUBMITTALS

A. Welding certificates.

B. Paint Compatibility Certificates: From manufacturers of topcoats applied over shop primers certifying that shop primers are compatible with topcoats.

1.6 QUALITY ASSURANCE

A. Installer Qualifications: Fabricator of products.

B. Welding Qualifications: Qualify procedures and personnel according to the following:

1. AWS D1.1/D1.1M, "Structural Welding Code - Steel."
2. AWS D1.3/D1.3M, "Structural Welding Code - Sheet Steel."

PART 2 - PRODUCTS

2.1 MANUFACTURERS

A. Manufacturers: Subject to compliance with requirements, available manufacturers offering products that may be incorporated into the Work include, but are not limited to, the following:

1. Alfab, Inc.
2. American Stair, Inc.
3. Lapeyre Stair Inc.
4. Pacific Stair Corporation.
5. Worthington Metal Fabricators.

2.2 PERFORMANCE REQUIREMENTS

A. Delegated Design: Engage a qualified professional engineer, as defined in Section 014000 "Quality Requirements," to design stairs[and railings].

B. Structural Performance of Stairs: Metal stairs shall withstand the effects of gravity loads and the following loads and stresses within limits and under conditions indicated:

1. Uniform Load: 100 lbf/sq. ft.4.79 kN/sq. m.
2. Concentrated Load: 300 lbf 1.33 kN applied on an area of 4 sq. in.2580 sq. mm.
3. Uniform and concentrated loads need not be assumed to act concurrently.
4. Stair Framing: Capable of withstanding stresses resulting from railing loads in addition to loads specified above.
5. Limit deflection of treads, platforms, and framing members to [L/360] <Insert deflection ratio> or 1/4 inch6.4 mm, whichever is less.

C. Structural Performance of Railings: Railings shall withstand the effects of gravity loads and the following loads and stresses within limits and under conditions indicated:

1. Handrails and Top Rails of Guards:

a. Uniform load of 50 lbf/ft. 0.73 kN/m applied in any direction.
b. Concentrated load of 200 lbf 0.89 kN applied in any direction.
c. Uniform and concentrated loads need not be assumed to act concurrently.

D. Seismic Performance of Stairs: Metal stairs shall withstand the effects of earthquake motions determined according to [ASCE/SEI 7]

1. Component Importance Factor: 1

2.3 METALS

A. Metal Surfaces, General: Provide materials with smooth, flat surfaces unless otherwise indicated. For components exposed to view in the completed Work, provide materials without seam marks, roller marks, rolled trade names, or blemishes.

B. Steel Plates, Shapes, and Bars: ASTM A 36/A 36M.

C. Steel Tubing: ASTM A 500 (cold formed)

D. Uncoated, Cold-Rolled Steel Sheet: ASTM A 1008/A 1008M,[either commercial steel, Type B, or] structural steel, Grade 25Grade 170, unless another grade is required by design loads; exposed.

E. Uncoated, Hot-Rolled Steel Sheet: ASTM A 1011/A 1011M,[either commercial steel, Type B, or] structural steel, Grade 30Grade 205, unless another grade is required by design loads.

2.4 FASTENERS

A. General: Provide zinc-plated fasteners with coating complying with ASTM B 633 or ASTM F 1941ASTM F 1941M, Class Fe/Zn 12 for exterior use, and Class Fe/Zn 5 where built into exterior walls. Select fasteners for type, grade, and class required.

B. Bolts and Nuts: Regular hexagon-head bolts, ASTM A 307, Grade AASTM F 568M, Property Class 4.6; with hex nuts, ASTM A 563ASTM A 563M; and, where indicated, flat washers.

C. Anchor Bolts: ASTM F 1554, Grade 36, of dimensions indicated; with nuts, ASTM A 563ASTM A 563M; and, where indicated, flat washers.

1. Provide mechanically deposited or hot-dip, zinc-coated anchor bolts for [exterior stairs] [stairs indicated to be galvanized] .

D. Post-Installed Anchors: [Torque-controlled expansion anchors] [or] [chemical anchors] capable of sustaining, without failure, a load equal to six times the load imposed when installed in unit masonry and four times the load imposed when installed in concrete, as determined by testing according to ASTM E 488/E 488M, conducted by a qualified independent testing agency.

1. Material for Interior Locations: Carbon-steel components zinc plated to comply with ASTM B 633 or ASTM F 1941ASTM F 1941M, Class Fe/Zn 5, unless otherwise indicated.

2.5 MISCELLANEOUS MATERIALS

A. Shop Primers: Provide primers that comply with [Section 099113 "Exterior Painting" and Section 099123 "Interior Painting."] [Section 099600 "High-Performance Coatings."] [Section 099113 "Exterior Painting," Section 099123 "Interior Painting," and Section 099600 "High-Performance Coatings."]

B. Universal Shop Primer: Fast-curing, lead- and chromate-free, universal modified-alkyd primer complying with MPI#79 and compatible with topcoat.

1. Use primer containing pigments that make it easily distinguishable from zinc-rich primer.

C. Shop Primer for Galvanized Steel: Primer formulated for exterior use over zinc-coated metal and compatible with finish paint systems indicated.

2.6 PRECAST CONCRETE TREADS

A. Concrete Materials and Properties: Comply with requirements in Section 033000 "Cast-in-Place Concrete" for normal-weight, ready-mixed concrete with a minimum 28-day compressive strength of 5000 psi 35 MPa and a total air content of not less than 4 percent or more than 6 percent.

2.7 FABRICATION, GENERAL

A. Provide complete stair assemblies, including metal framing, hangers, struts, **railings,** clips, brackets, bearing plates, and other components necessary to support and anchor stairs and platforms on supporting structure.

1. Join components by welding unless otherwise indicated.

B. Preassembled Stairs: Assemble stairs in shop to greatest extent possible. Disassemble units only as necessary for shipping and handling limitations. Clearly mark units for reassembly and coordinated installation.

C. Cut, drill, and punch metals cleanly and accurately. Remove burrs and ease edges to a radius of approximately 1/32 inch 1 mm (1mm) unless otherwise indicated. Remove sharp or rough areas on exposed surfaces.

D. Form bent-metal corners to smallest radius possible without causing grain separation or otherwise impairing work.

E. Form exposed work with accurate angles and surfaces and straight edges.

F. Weld connections to comply with the following:

1. Use materials and methods that minimize distortion and develop strength and corrosion resistance of base metals.
2. Obtain fusion without undercut or overlap.
3. Remove welding flux immediately.
4. Weld exposed corners and seams continuously unless otherwise indicated.
5. At exposed connections, finish exposed welds to comply with NOMMA's "Voluntary Joint Finish Standards" for **Type 3 welds: partially dressed weld with spatter removed**.

G. Form exposed connections with hairline joints, flush and smooth, using concealed fasteners where possible. Where exposed fasteners are required, use Phillips flat-head (countersunk) screws or bolts unless otherwise indicated. Locate joints where least conspicuous.

2.8 STEEL-FRAMED STAIRS

A. NAAMM Stair Standard: Comply with "Recommended Voluntary Minimum Standards for Fixed Metal Stairs" in NAAMM AMP 510, "Metal Stairs Manual," Commercial Class, unless more stringent requirements are indicated.

B. Stair Framing:

1. Fabricate stringers of steel tubes].

   a. Provide closures for exposed ends of stringers.

2. Construct platforms of steel plate or channel headers and miscellaneous framing members as needed to comply with performance requirements] [indicated].
3. Weld stringers to headers; weld framing members to stringers and headers.
4. Where masonry walls support metal stairs, provide temporary supporting struts designed for erecting steel stair components before installing masonry.

C. Metal Pan Stairs: Form risers, sub-tread pans, and sub-platforms to configurations shown from steel sheet of thickness [needed to comply with performance requirements, but not less than 0.067 inch1.7 mm] .

1. Steel Sheet: Uncoated cold-rolled steel sheet.
2.
3. Directly weld metal pans to stringers; locate welds on top of subtreads where they are concealed by concrete fill. Do not weld risers to stringers.
4. Attach risers and sub treads to stringers with brackets made of steel angles or bars. Weld brackets to stringers and attach metal pans to brackets by welding, riveting, or bolting.
5. Shape metal pans to include nosing integral with riser.

2.9 STAIR RAILINGS

A. Comply with applicable requirements in [Section 055213 "Pipe and Tube Railings."] [Section 057300 "Decorative Metal Railings."]

1. Fabricate newels of square steel tubing and provide newel caps of pressed steel, as shown.
2. Rails may be bent at corners, rail returns, and wall returns, instead of using prefabricated fittings.
3. Connect posts to stair framing by direct welding unless otherwise indicated.

B. Steel Tube Railings: Fabricate railings to comply with requirements indicated for design, dimensions, details, finish, and member sizes, including wall thickness of tube, post spacings, and anchorage, but not less than that needed to withstand indicated loads.

1. Rails and Posts: 41-mm- top rails 1inch x2 1/2 inch and bottom rails1 1/4inch x 1/2 inch and 1-1/2-inch- 38-mm- square posts.
2. Picket Infill: 1 inch by1/4-inch pickets spaced less than 4 inches 100 mm clear.
3. Mesh Infill: Woven wire mesh crimped into 1-by-1/2-by-1/8-inch 25-by-13-by-3-mm steel channel frames. Orient wire mesh with wires perpendicular and parallel to top rail.

C. Welded Connections: Fabricate railings with welded connections. Cope components at connections to provide close fit, or use fittings designed for this purpose. Weld all around at connections, including at fittings.

1. Finish welds to comply with NOMMA's "Voluntary Joint Finish Standards" for Type 2 welds: completely sanded joint, some undercutting and pinholes are okayas shown in NAAMM AMP 521.

D. Form changes in direction of railings as follows:

1. By bending or by inserting prefabricated elbow fittings.
2. Steel tube change in direction must be mitered and welded.

E. For changes in direction made by bending, use jigs to produce uniform curvature for each repetitive configuration required. Maintain cross section of member throughout entire bend without buckling, twisting, cracking, or otherwise deforming exposed surfaces of components.

F. Close exposed ends of railing members with prefabricated end fittings.

G. Provide wall returns at ends of wall-mounted handrails unless otherwise indicated. Close ends of returns unless clearance between end of rail and wall is 1/4 inch6 mm) .

H. Connect posts to stair framing by direct welding unless otherwise indicated.

I. Brackets, Flanges, Fittings, and Anchors: Provide wall brackets, end closures, flanges, miscellaneous fittings, and anchors for interconnecting components and for attaching to other work. Furnish inserts and other anchorage devices for connecting to concrete or masonry work.

1. For galvanized railings, provide galvanized fittings, brackets, fasteners, sleeves, and other ferrous-metal components.
2. For non-galvanized railings, provide non-galvanized ferrous-metal fittings, brackets, fasteners, and sleeves, except galvanize anchors embedded in exterior masonry and concrete construction.
3. Provide type of bracket] [with predrilled hole for exposed bolt anchorage] and that provides 1-1/2-inch 38-mm clearance from inside face of handrail to finished wall surface.

J. Fillers: Provide fillers made from steel plate, or other suitably crush-resistant material, where needed to transfer wall bracket loads through wall finishes to structural supports. Size fillers to suit wall finish thicknesses and to produce adequate bearing area to prevent bracket rotation and overstressing of substrate.

2.10 FINISHES

A. Finish metal stairs after assembly.

B. Galvanizing: Hot-dip galvanize items as indicated to comply with ASTM A 153/A 153M for steel and iron hardware and with ASTM A 123/A 123M for other steel and iron products.

1. Do not quench or apply post galvanizing treatments that might interfere with paint adhesion.
2. Fill vent and drain holes that are exposed in the finished Work, unless indicated to remain as weep holes, by plugging with zinc solder and filing off smooth.

C. Preparation for Shop Priming: Prepare uncoated ferrous-metal surfaces to comply with SSPC-SP 3, "Power Tool Cleaning."

D. Apply shop primer to uncoated surfaces of metal stair components, except those with galvanized finishes and those to be embedded in concrete or masonry unless otherwise indicated. Comply with SSPC-PA 1, "Paint Application Specification No. 1: Shop, Field, and Maintenance Painting of Steel," for shop painting.

PART 3 - EXECUTION

3.1 INSTALLING METAL PAN STAIRS

A. Fastening to In-Place Construction: Provide anchorage devices and fasteners where necessary for securing metal stairs to in-place construction. Include threaded fasteners for concrete and masonry inserts, through-bolts, lag bolts, and other connectors.

B. Cutting, Fitting, and Placement: Perform cutting, drilling, and fitting required for installing metal stairs. Set units accurately in location, alignment, and elevation, measured from established lines and levels and free of rack.

C. Install metal stairs by welding stair framing to steel structure or to weld plates cast into concrete unless otherwise indicated.

D. Provide temporary bracing or anchors in formwork for items that are to be built into concrete, masonry, or similar construction.

E. Fit exposed connections accurately together to form hairline joints. Weld connections that are not to be left as exposed joints but cannot be shop welded because of shipping size limitations. Do not weld, cut, or abrade surfaces of exterior units that have been hot-dip galvanized after fabrication and are for bolted or screwed field connections.

F. Field Welding: Comply with requirements for welding in "Fabrication, General" Article.

G. Place and finish concrete fill for treads and platforms to comply with Section 033000 "Cast-in-Place Concrete."

1. Install abrasive nosings with anchors fully embedded in concrete. Center nosings on tread width.

H. Install precast concrete treads with adhesive / mechanical fasteners supplied by manufacturer.

3.2 INSTALLING RAILINGS

A. Adjust railing systems before anchoring to ensure matching alignment at abutting joints. Space posts at spacing indicated or, if not indicated, as required by design loads. Plumb posts in each direction. Secure posts and rail ends to building construction as follows:

1. Anchor posts to steel by welding to steel supporting members.
2. Anchor handrail ends to concrete and masonry with steel round flanges welded to rail ends and anchored with post installed anchors and bolts.

B. Attach handrails to wall with wall brackets. Locate brackets as indicated or, if not indicated, at spacing required to support structural loads. Secure wall brackets to building construction as required to comply with performance requirements as follows:

1. For concrete and solid masonry anchorage, use drilled-in expansion shields and hanger or lag bolts.
2. For hollow masonry anchorage, use toggle bolts.
3. For steel-framed partitions, use hanger or lag bolts set into fire-retardant-treated wood backing between studs. Coordinate with stud installation to locate backing members.

4. For steel-framed partitions, use self-tapping screws fastened to steel framing or to concealed steel reinforcements.

3.3 ADJUSTING AND CLEANING

A. Touchup Painting: Immediately after erection, clean field welds, bolted connections, and abraded areas of shop paint, and paint exposed areas with same material as used for shop painting to comply with SSPC-PA 1 for touching up shop-painted surfaces.

1. Apply by brush or spray to provide a minimum 2.0-mil 0.05-mm dry film thickness.

B. Touchup Painting: Cleaning and touchup painting of field welds, bolted connections, and abraded areas of shop paint are specified in [Section 099113 "Exterior Painting" and Section 099123 "Interior Painting."] [Section 099600 "High-Performance Coatings."] [Section 099113 "Exterior Painting," Section 099123 "Interior Painting," and Section 099600 "High-Performance Coatings."]

C. Galvanized Surfaces: Clean field welds, bolted connections, and abraded areas and repair galvanizing to comply with ASTM A 780/A 780M.

END OF SECTION 055113

SECTION 05 5213 - PIPE AND TUBE RAILINGS

PART 1 - GENERAL

1.1 RELATED DOCUMENTS

A. Drawings and general provisions of the Contract, including General and Supplementary Conditions and Division 01 Specification Sections, apply to this Section.

1.2 SUMMARY

A. Section Includes:

1. Steel pipe railings.

B. Related Sections:

1. Division 05 Section "Metal Stairs" for steel tube railings associated with metal stairs.
2. Division 06 Section "Miscellaneous Rough Carpentry" for wood blocking for anchoring railings.

1.3 PERFORMANCE REQUIREMENTS

A. Delegated Design: Design railings, including comprehensive engineering analysis by a qualified professional engineer, using performance requirements and design criteria indicated.

B. General: In engineering railings to withstand structural loads indicated, determine allowable design working stresses of railing materials based on the following:

1. Steel: 72 percent of minimum yield strength.
2. Aluminum: The lesser of minimum yield strength divided by 1.65 or minimum ultimate tensile strength divided by 1.95.
3. Stainless Steel: 60 percent of minimum yield strength.

C. Structural Performance: Railings shall withstand the effects of gravity loads and the following loads and stresses within limits and under conditions indicated:

1. Handrails and Top Rails of Guards:

a. Uniform load of 50 lbf/ ft. (0.73 kN/m) applied in any direction.
b. Concentrated load of 200 lbf (0.89 kN) applied in any direction.
c. Uniform and concentrated loads need not be assumed to act concurrently.

2. Infill of Guards:

a. Concentrated load of 50 lbf (0.22 kN) applied horizontally on an area of 1 sq. ft. (0.093 sq. m).
b. Infill load and other loads need not be assumed to act concurrently.

D. Thermal Movements: Allow for thermal movements from ambient and surface temperature changes acting on exterior metal fabrications by preventing buckling, opening of joints, overstressing of components, failure of connections, and other detrimental effects.

1. Temperature Change: 120 deg F (67 deg C), ambient; 180 deg F (100 deg C), material surfaces.

E. Control of Corrosion: Prevent galvanic action and other forms of corrosion by insulating metals and other materials from direct contact with incompatible materials.

1.4 ACTION SUBMITTALS

A. Shop Drawings: Include plans, elevations, sections, details, and attachments to other work.

B. Delegated-Design Submittal: For installed products indicated to comply with performance requirements and design criteria, including analysis data signed and sealed by the qualified professional engineer responsible for their preparation.

1.5 INFORMATIONAL SUBMITTALS

A. Qualification Data: For qualified professional engineer.

B. Mill Certificates: Signed by manufacturers of stainless-steel products certifying that products furnished comply with requirements.

C. Welding certificates.

D. Product Test Reports: Based on evaluation of comprehensive tests performed by a qualified testing agency, according to ASTM E 894 and ASTM E 935.

1.6 QUALITY ASSURANCE

A. Source Limitations: Obtain each type of railing from single source from single manufacturer.

B. Welding Qualifications: Qualify procedures and personnel according to AWS D1.1/D1.1M, "Structural Welding Code - Steel."

C. Welding Qualifications: Qualify procedures and personnel according to the following:

1. AWS D1.1/D1.1M, "Structural Welding Code - Steel."
2. AWS D1.2/D1.2M, "Structural Welding Code - Aluminum."
3. AWS D1.6, "Structural Welding Code - Stainless Steel."

1.7 PROJECT CONDITIONS

A. Field Measurements: Verify actual locations of walls and other construction contiguous with metal fabrications by field measurements before fabrication.

1.8 COORDINATION AND SCHEDULING

A. Coordinate selection of shop primers with topcoats to be applied over them. Comply with paint and coating manufacturers' written recommendations to ensure that shop primers and topcoats are compatible with one another.

B. Coordinate installation of anchorages for railings. Furnish setting drawings, templates, and directions for installing anchorages, including sleeves, concrete inserts, anchor bolts, and items with integral anchors, that are to be embedded in concrete or masonry. Deliver such items to Project site in time for installation.

C. Schedule installation so wall attachments are made only to completed walls. Do not support railings temporarily by any means that do not satisfy structural performance requirements.

PART 2 - PRODUCTS

2.1 METALS, GENERAL

A. Metal Surfaces, General: Provide materials with smooth surfaces, without seam marks, roller marks, rolled trade names, stains, discolorations, or blemishes.

B. Brackets, Flanges, and Anchors: Cast or formed metal of same type of material and finish as supported rails unless otherwise indicated.

2.2 STEEL AND IRON

A. Recycled Content of Steel Products: Postconsumer recycled content plus one-half of preconsumer recycled content not less than 25 percent.

B. Pipe: ASTM A 53/A 53M, Type F or Type S, Grade A, Standard Weight (Schedule 40), unless another grade and weight are required by structural loads.

C. Plates, Shapes, and Bars: ASTM A 36/A 36M.

D. Cast Iron: Either gray iron, ASTM A 48/A 48M, or malleable iron, ASTM A 47/A 47M, unless otherwise indicated.

2.3 FASTENERS

A. General: Provide the following:

1. Ungalvanized-Steel Interior Stairway Railings: Plated steel fasteners complying with ASTM B 633 or ASTM F 1941 (ASTM F 1941M), Class Fe/Zn 5 for zinc coating.

2. Hot-Dip Galvanized Exterior Railings: Type 304 stainless-steel or hot-dip zinc-coated steel fasteners complying with ASTM A 153/A 153M or ASTM F 2329 for zinc coating

B. Fasteners for Anchoring Railings to Other Construction: Select fasteners of type, grade, and class required to produce connections suitable for anchoring railings to other types of construction indicated and capable of withstanding design loads.

C. Fasteners for Interconnecting Railing Components:

1. Provide concealed fasteners for interconnecting railing components and for attaching them to other work, unless otherwise indicated.
2. Provide tamper-resistant flat-head machine screws for exposed fasteners unless otherwise indicated.

2.4 MISCELLANEOUS MATERIALS

A. Welding Rods and Bare Electrodes: Select according to AWS specifications for metal alloy welded.

B. Shop Primers: At interior stairway railing, provide primers that comply with Division 09 painting Sections.

C. Epoxy Zinc-Rich Primer: At exterior railings, complying with MPI#20 and compatible with topcoat

2.5 FABRICATION

A. General: Fabricate railings to comply with requirements indicated for design, dimensions, member sizes and spacing, details, finish, and anchorage, but not less than that required to support structural loads.

B. Assemble railings in the shop to greatest extent possible to minimize field splicing and assembly. Disassemble units only as necessary for shipping and handling limitations. Clearly mark units for reassembly and coordinated installation. Use connections that maintain structural value of joined pieces.

C. Cut, drill, and punch metals cleanly and accurately. Remove burrs and ease edges to a radius of approximately 1/32 inch (1 mm) unless otherwise indicated. Remove sharp or rough areas on exposed surfaces.

D. Form work true to line and level with accurate angles and surfaces.

E. Fabricate connections that will be exposed to weather in a manner to exclude water. Provide weep holes where water may accumulate.

F. Cut, reinforce, drill, and tap as indicated to receive finish hardware, screws, and similar items.

G. Connections: Fabricate railings with welded connections unless otherwise indicated.

H. Welded Connections: Cope components at connections to provide close fit, or use fittings designed for this purpose. Weld all around at connections, including at fittings.

1. Use materials and methods that minimize distortion and develop strength and corrosion resistance of base metals.
2. Obtain fusion without undercut or overlap.
3. Remove flux immediately.
4. At exposed connections, finish exposed surfaces smooth and blended so no roughness shows after finishing and welded surface matches contours of adjoining surfaces.

I. Form changes in direction as follows:

1. As detailed.

J. Bend members in jigs to produce uniform curvature for each configuration required; maintain cross section of member throughout entire bend without buckling, twisting, cracking, or otherwise deforming exposed surfaces of components.

K. Close exposed ends of railing members with prefabricated end fittings.

L. Provide wall returns at ends of wall-mounted handrails unless otherwise indicated. Close ends of returns unless clearance between end of rail and wall is 1/4 inch (6 mm) or less.

M. Brackets, Flanges, Fittings, and Anchors: Provide wall brackets, flanges, miscellaneous fittings, and anchors to interconnect railing members to other work unless otherwise indicated.

1. At brackets and fittings fastened to plaster or gypsum board partitions, provide crush-resistant fillers, or other means to transfer loads through wall finishes to structural supports and prevent bracket or fitting rotation and crushing of substrate.

N. Provide inserts and other anchorage devices for connecting railings to concrete or masonry work. Fabricate anchorage devices capable of withstanding loads imposed by railings. Coordinate anchorage devices with supporting structure.

2.6 FINISHES, GENERAL

A. Comply with NAAMM's "Metal Finishes Manual for Architectural and Metal Products" for recommendations for applying and designating finishes.

B. Provide exposed fasteners with finish matching appearance, including color and texture, of railings.

2.7 STEEL AND IRON FINISHES

A. Galvanized Railings:

1. Hot-dip galvanize exterior steel and iron railings, including hardware, after fabrication.
2. Comply with ASTM A 123/A 123M for hot-dip galvanized railings.
3. Comply with ASTM A 153/A 153M for hot-dip galvanized hardware.
4. Do not quench or apply post galvanizing treatments that might interfere with paint adhesion.
5. Fill vent and drain holes that will be exposed in the finished Work, unless indicated to remain as weep holes, by plugging with zinc solder and filing off smooth.

B. For galvanized railings, provide hot-dip galvanized fittings, brackets, fasteners, sleeves, and other ferrous components.

C. Preparing Galvanized Railings for Shop Priming: After galvanizing, thoroughly clean railings of grease, dirt, oil, flux, and other foreign matter, and treat with etching cleaner.

D. For nongalvanized steel railings, provide nongalvanized ferrous-metal fittings, brackets, fasteners, and sleeves, except galvanize anchors to be embedded in exterior concrete or masonry.

E. Preparation for Shop Priming: Prepare uncoated ferrous-metal surfaces to comply with SSPC-SP 6/NACE No. 3, "Commercial Blast Cleaning."

F. Primer Application: Apply shop primer to prepared surfaces of railings unless otherwise indicated. Comply with requirements in SSPC-PA 1, "Paint Application Specification No. 1: Shop, Field, and Maintenance Painting of Steel," for shop painting. Primer need not be applied to surfaces to be embedded in concrete or masonry.

PART 3 - EXECUTION

3.1 EXAMINATION

A. Examine plaster and gypsum board assemblies, where reinforced to receive anchors, to verify that locations of concealed reinforcements have been clearly marked for Installer. Locate reinforcements and mark locations if not already done.

3.2 INSTALLATION, GENERAL

A. Fit exposed connections together to form tight, hairline joints.

B. Perform cutting, drilling, and fitting required for installing railings. Set railings accurately in location, alignment, and elevation; measured from established lines and levels and free of rack.

1. Do not weld, cut, or abrade surfaces of railing components that have been coated or finished after fabrication and that are intended for field connection by mechanical or other means without further cutting or fitting.
2. Set posts plumb within a tolerance of 1/16 inch in 3 feet (2 mm in 1 m).
3. Align rails so variations from level for horizontal members and variations from parallel with rake of steps and ramps for sloping members do not exceed 1/4 inch in 12 feet (5 mm in 3 m).

C. Adjust railings before anchoring to ensure matching alignment at abutting joints.

D. Fastening to In-Place Construction: Use anchorage devices and fasteners where necessary for securing railings and for properly transferring loads to in-place construction.

3.3 RAILING CONNECTIONS

A. Welded Connections: Use fully welded joints for permanently connecting railing components. Comply with requirements for welded connections in "Fabrication" Article whether welding is performed in the shop or in the field.

3.4 ATTACHING RAILINGS

A. Attach railings to wall with wall brackets. Provide brackets with 1-1/2-inch (38-mm) clearance from inside face of handrail and finished wall surface. Locate brackets as indicated or, if not indicated, at spacing required to support structural loads.

1. Use type of bracket with predrilled hole for exposed bolt anchorage.
2. Locate brackets as indicated or, if not indicated, at spacing required to support structural loads.

B. Secure wall brackets to building construction as follows:

1. For hollow masonry anchorage, use toggle bolts.
2. For steel-framed partitions, use hanger or lag bolts set into fire-retardant-treated wood backing between studs. Coordinate with stud installation to locate backing members.

3.5 ADJUSTING AND CLEANING

A. Touchup Painting: Cleaning and touchup painting of field welds, bolted connections, and abraded areas of shop paint are specified in Division 09 painting Sections.

3.6 PROTECTION

A. Protect finishes of railings from damage during construction period with temporary protective coverings approved by railing manufacturer. Remove protective coverings at time of Substantial Completion.

END OF SECTION 05 5213

SECTION 05 720 – DECORATIVE METAL RAILINGS

PART 1 - GENERAL

1.1 RELATED DOCUMENTS

A. Drawings and general provisions of the Contract, including General and Supplementary Conditions and Division 01 Specification Sections, apply to this Section.

1.2 SUMMARY

A. This section Includes the following:

1. Steel and iron ornamental handrails and railings.

B. Related Sections include the following:

1. Division 05 Section "Metal Stairs" for handrails and railings associated with metal stairs.
2. Division 05 Section "Pipe and Tube Railings" for handrails and railings fabricated from pipe and tube components.

1.3 PERFORMANCE REQUIREMENTS

A. General: In engineering handrails and railings to withstand structural loads indicated, determine allowable design working stresses of materials based on the following:

1. Cold-Formed Structural Steel: AISI SG-673, Part I, “Specification for the Design of Cold-Formed Steel Structural Members.”

B. Structural Performance of Handrails and Railings: Provide handrails and railings capable of withstanding the following structural loads without exceeding allowable design working stress of materials for handrails, railings, anchors, and connections:

1. Top Rail of Guards: Capable of withstanding the following loads applied a indicated:

a. Concentrated load of 200 lbf (890 N) applied at any point and in any direction.
b. Uniform load of 50 lbf/ft (730 N/m) applied horizontally and concurrently with uniform load of 100 lbf/ft (1460 N/m) applied vertically downward.
c. Concentrated and uniform loads above need not be assumed to act concurrently.

2. Handrails Not Serving As Top Rails: Capable of withstanding the following loads applied as indicated:

a. Concentrated load of 200 lbf (890 N) applied at any point and in any direction.
b. Uniform load of 50 lbf/ft (730 N/m) applied in any direction.
c. Concentrated and uniform loads above need not be assumed to act concurrently.

3. Infill Area of Guards: Capable of withstanding a horizontal concentrated load of 200 lbf (890 N) applied to 1 sq. ft. (0.09 sq. m) at any point in system, including panels, intermediate rails, balusters, or other elements composing infill area.

C. Load above need not be assumed to act concurrently with loads on top rails in determining stress on guard. Thermal Movements: Provide handrails and railings that allow for thermal movements resulting from the following maximum change (range) in ambient and surface temperatures by preventing buckling, opening of joints, overstressing of components, failure of connections, and other detrimental effects. Base engineering calculation on surface temperatures of materials due to both solar heat gain and nighttime-sky heat loss.

1. Temperature Change (Range): 120 deg F (67 deg C), ambient; 180 deg F (100 deg C), material surfaces.

D. Control of Corrosion: Prevent galvanic action and other forms of corrosion by insulating metals and other materials from direct contact with incompatible materials.

1.4 SUBMITTALS

A. Product Data: For manufacturer's product lines of handrails and railings assembled from standard components.

1. Include Product Data for grout, anchoring cement, and paint products.

B. Shop Drawings: Show fabrication and installation of handrails and railings. Include plans, elevations, sections, details, and attachments to other Work.

1. For installed handrails and railings indicated to comply with design loads, include structural analysis data signed an dsealed by the qualified professional engineer responsible fo rhteir preparation.

C. Samples for Verification: For each type of exposed finish required, prepared on components indicated below and of same thickness and metal indicated for the Work. If finishes involve normal color and texture variations, include sample sets showing the full range of variations expected.

1. Fittings and brackets.
2. Welded connections.
3. Assembled Samples of railings, made from full-size components, including top rail, post, handrail, and infill. Show method of finishing members at intersections. Samples need not be full height.

D. Qualification Data: For firms and persons specified in "Quality Assurance" Article to demonstrate their capabilities and experience. Include lists of completed projects with project names and addresses, names and addresses of architects and owners, and other information specified.

E. Product Test Reports: Indicating handrails and railings comply with ASTM E 985, based on comprehensive testing of current products.

1.5 QUALITY ASSURANCE

A. Professional Engineer Qualifications: A professional engineer who is legally qualified to practice in jurisdiction where Project is located and who is experienced in projeding engineering services of the kind indicated. Engineering services are defined as those performed for installations of handrails and railing that are similar to those indicated for this Project in material, design, and extent.

B. Testing Agency Qualifications: An independent testing agency with the experience and capability to conduct the testing indicated, as documented according to ASTM E 548.

C. Source Limitations: Obtain each type of railing through one source from a single manufacturer.

D. Mockups: Before installing handrails and railings, build mockups to verify selections made under sample submittals and to demonstrate aesthetic effects and qualities of materials and execution. Build mockups to comply with the following requirements, using materials indicated for the completed Work:

1. Build mockups in the location indicated or, if not indicated, as directed by Architect.
2. Build mockups for each form and finish of railing consisting of two posts, top rail, infill area, and anchorage system components that are full height and are not less than 48 inches (1.2 m) in length.
3. Notify Architect seven days in advance of dates and times when mockups will be constructed.
4. Obtain Architect's approval of mockups before fabricating ornamental handrails and railings.
5. Maintain mockups during construction in an undisturbed condition as a standard for judging the completed Work.
6. Demolish and remove mockups when directed.

1.6 STORAGE

A. Store handrails and railings in a dry, well-ventilated, weathertight place.

1.7 PROJECT CONDITIONS

A. Field Measurements: Verify handrail and railing dimensions by field measurements before fabrication and indicate measurements on Shop Drawings. Coordinate fabrication schedule with construction progress to avoid delaying the Work.

1.8 COORDINATION

A. Coordinate installation of anchorages for handrails and railings. Furnish Setting Drawings, templates, and directions for installing anchorages, including sleeves, concrete inserts, anchor bolts, and items with integral anchors, that are to be embedded in concrete or masonry. Deliver such items to Project site in time for installation.

1.9 SCHEDULING

A. Schedule installation so handrails and railings are mounted only on completed walls. Do not support temporarily by any means that do not satisfy structural performance requirements.

PART 2 – PRODUCTS

2.1 MANUFACTURERS

A. Available Manufacturers: Subject to compliance with requirements, manufacturers offering products that may be incorporated into the Work include, but are not limited to the following:

1. Steel and Iron Handrails and Railings:

a. Blum: Julius Blum & co., Inc.
b. Braun: J.G. Braun Co.
c. Livers Bronze Co., Inc.
d. Wagner: R&B Wagner, Inc.
e. Others, pre-approved by Architect

2. Custom Steel and Iron Handrails and Railings:

a. Topeka Metal Specialties Inc, 5600 SW Topeka Blvd., Topeka, KS. Phone 785-862-1071
b. Perine Metal Works, 916 SE 4th Street, Topeka, KS. Phone 785-232-1018
c. Custom Metals, 4544 Don's Road, Madison Wisconsin. Phone 608-222-4699
d. Others, pre-approved by Architect.

2.2 METALS

A. General: Provide metal free from pitting, seam marks, roller marks, stains, discolorations, and other imperfections where exposed to view on finished units.

B. Steel and Iron: Comply with the following requirements for each form required:

1. Steel Tubing: Cold-Formed steel tubing, ASTM A 500, Grade A, unless another grade is indicated or required by structural loads.
2. Steel Rails and Bars: Hot-rolled, carbon steel complying with ASTM A 29/A 29M, Grade 1010.
3. Steel Plates, Shapes and Bars: ASTM A 36/A 36M.
4. Iron Castings: Malleable iron complying with ASTM A 47, Grade 32510 (ASTM A 47M, Grade 22010)
5. Iron Castings; Gray iron complying with ASTM A 48, Class 30 (ASTM A 48M, Class 200)

C. Brackets, Flanges, and Anchors: cast or formed metal of same type of material and finish as supported rail, unless otherwise indicated.

1. Provide cast brackets with flange tapped for concealed anchorage to threaded hanger bolt.

2.3 MISCELLANEOUS MATERIALS

A. Filler Metal and electrodes: Provide type and alloy of filler metal and electrodes as recommended by producer of metal to be welded or brazed and as required for color match, strength, corrosion resistance, and compatibility in fabricated items.

2.4 FASTNERS

A. Fasteners for Anchoring Handrails and Railings to Other Construction: Select fasteners of type, grade and class required to produce connections suitable for anchoring handrails and railing to other types of construction indicated and capable of withstanding design loads.

1. For steel handrails, railings and fittings, use plated fasteners complying with ASTM B 633, Class Fe/Zn 25 for electrodeposited zinc coating.

B. Fasteners for Interconnecting Handrail and Railing Components: Use fasteners fabricated from same basic metal as fastened metal, unless otherwise indicated. Do not use metals that are corrosive or incompatible with materials joined

1. Provide concealed fasteners for interconnection railing components and for attaching them to other Work, unless otherwise indicated.

C. Cast-in-Place and Postinstalled Anchors: Anchors of type indicated below, fabricated from corrosion-resistant materials with capability to sustain, without failure, a load equal to six times the load imposed when installed in unit masonry and equal to four times the load imposed when installed in concrete, as determined by testing per ASTM E 488 conducted by a qualified independent testing agency.

1. Cast-in-place anchors.
2. Expansion anchors.

2.5 PAINT

A. At all Handrails or Guardrails exposed to public view, and in lieu of a shop-primed and field-painted finish, provide a powder-coated finish in accordance with the following requirements:

1. Materials: The material shall be finely ground free flowing powder of a one component material consisting of a resin and curing agent system, catalysts, fillers, colorants, and flow control agents in order to form a powder formulation capable of being electrostatically applied. The powder shall be uniform, free from grit, and free of solvent, abrasives, water, chlorides or other impurities.
2. Coating Characteristics: When applied to a substrate and subjected to a heating cycle, as required by the contractor, the material shall melt, fuse, and subsequently cure to form a coating which conforms to the requirement of this specification.
3. Film Properties: the powder coating shall be applied by established commercial powder coating methods over abrasive blasted steel. Coatings shall have a total dry film thickness of 4 to 6 mils. The cured coating shall be uniform, smooth, even and free from run, sags and streaks.
4. Color: As selected by Architect from manufacturer’s standard colors.

2.6 GROUT AND ANCHORING CEMENT

A. Nonshrink, Nonmetallic Grout: Premixed, factory-packaged, nonstaining, noncorrosive, nongaseous grout complying with ASTM C 1107. Provide grout specifically recommended by manufacturer for interior and exterior applications.

B. Erosion-Resistant Anchoring Cement: Factory-packaged, nonshrink, nonstaining, hydraulic-controlled expansion cement formulation for mixing with water at Project site to create pourable anchoring, patching, and grouting compound. Provide formulation that is resistant to erosion from water exposure without needing protection by a sealer or waterproof coating and that is recommended by manufacturer for exterior use.

2.7 FABRICATION

A. Assemble handrails and railings in shop to greatest extent possible to minimize field splicing and assembly. Disassemble units only as necessary for shipping and handling limitations. Clearly mark units for reassembly and coordinated installation. Use connections that maintain structural value of joined pieces.

B. Form changes indirection of railing members as follows:

1. As detailed.

C. Form simple and compound curves by bending members in jigs to produce uniform curvature for each repetitive configuration required; maintain profile of member throughout entire bend without buckling, twisting, cracking, or otherwise deforming exposed surfaces of handrail and railing components.

D. Welded Connections: Fabricate handrails and railing for connecting members by welding. Cope components at perpendicular and skew connections to provide close fit, or use fittings designed for this purpose. Weld connections continuously to comply with the following:

1. Use materials and methods that minimize distortion and develop strength and corrosion resistance of base metals.
2. Obtain fusion without undercut or overlap.
3. Remove flux immediately.
4. At exposed connections, finish exposed surfaces smooth and blended so no roughness shows after finishing and welded surface matches contours of adjoining surfaces.

E. Brackets, Flanges, Fittings and Anchors: Provide manufacturer's standard wall brackets, flanges, miscellaneous fittings, and anchors to connect handrail and railing members to other construction.

F. Provide inserts and other anchorage devices to connect handrails and railings to concrete or masonry. Fabricate anchorage devices capable of withstanding loads imposed by handrails and railings. Coordinate anchorage devices with supporting structure

G. For railing posts set in concrete, provide preset sleeves of steel not less than 6 inches (150 mm) long with inside dimensions not less than ½ inch (12 mm) larger than outside dimensions of post, and steel plate forming bottom closure.

H. Shear and punch metals cleanly and accurately. Remove burrs from exposed cut edges.

I. Ease exposed edges to a radius of approximately 1/32 inch (1 mm), unless otherwise indicated. Form bent-metal corners to smallest radius possible without causing grain separation or otherwise impairing the Work.

J. Cut, reinforce, drill and tap components, as indicated, to receive finish hardware, screws and similar items.

K. Provide weep holes or another means to drain entrapped water in hallow sections of railing members that are exposed to exterior or to moisture from condensation or other sources.

L. Fabricate joints that will be exposed to weather in a watertight manner

M. Close exposed ends of railing members with prefabricated end fittings.

N. Provide wall returns at ends of wall-mounted handrails, unless otherwise indicated. Close ends of returns.

2.8 FINISHES, GENERAL

A. Comply with NAAMM's "Metal Finishes Manual for Architectural and Metal Products" for recommendations for applying and designating finishes.

B. Protect mechanical finishes on exposed surfaces from damage by applying a strippable, temporary protective covering before shipment.

C. Appearance of Finished Work: Variations in appearance of abutting or adjacent pieces are acceptable if they are within one-half of the range of approved Samples. Noticeable variations in same piece are not acceptable. Variations in appearance of other components are acceptable if they are within the range of approved Samples and are assembled or installed to minimize contrast.

2.9 STEEL AND IRON FINISHES

A. Galvanized Handrails and Railing: Hot-dip galvanize exterior steel and iron handrails and railings to comply with ASTM A 123. Hot-dip galvanize hardware for exterior steel and iron handrails and railings to comply with ASTM A 153/A 153M.

B. Fill vent and drain holes that will be exposed in finished Work, unless indicated to remain as weep holes, by plugging with zinc solder and filing off smooth.

C. For galvanized handrails and railings, provide galvanized fittings, brackets, fasteners, sleeves and other ferrous components.

D. Preparation for Shop Priming: After galvanizing, thoroughly clean handrails and railings of grease, dirt, oil, flux, and other foreign matter, and treat with metallic-phosphate process.

E. Apply shop primer to prepared surfaces of handrails and railings, unless otherwise indicated. Comply with requirements in SSPC-PA 1, "Paint Application Specification No. 1", for shop painting. Primer need not be applied to surfaces to be embedded in concrete or masonry.

1. Stripe paint edges, corners, crevices, bolts and welds.

F. Painted Finish: Comply with Division 9 Section "Painting".

PART 3 – EXCEUTION

3.1 INSTALLATION, GENERAL

A. Fit exposed connections together to form tight, hairline joints.

B. Cutting, Fitting and Placement: Perform cutting drilling and fitting required for installing handrails and railings. Set handrails and railings accurately in location, alignment, and elevation, measured from established lines and levels and free from rack.

1. Do not weld, cut or abrade surfaces of railing components that have been coated or finished after fabrication and that are intended for field connection by mechanical or other means without further cutting or fitting.
2. Set posts plumb within a tolerance of 1/16 inch in 3 feet (2 mm in 1 m).

3. Align rails so variation from level for horizontal members and from parallel with rake of steps and ramps for sloping members do not exceed 1.4 inch in 12 feet (5 mm in 3 m)

C. Adjust handrails and railings before anchoring to ensure alignment at abutting joints. Space posts at interval indicated, but not less than that required by structural loads.

D. Fastening to in-Place Construction: Use anchorage devices and fasteners where necessary for securing handrails and railing and for properly transferring loads to in-place construction.

3.2 RAILING CONNECTIONS

A. Welded Connections: Use fully welded joints for permanently connecting railing components. Comply with requirements for welded connections in “Fabrication” Article whether welding is performed in shop or in field.

B. Expansion Joints: Install expansion joints at locations indicated but not further apart than required to accommodate thermal movement. Provide slip-joint internal sleeve extending 2 inches (50 mm) beyond joint on either side; fasten internal sleeve securely to one side; locate joint within 6 inches (150 mm) of post.

3.3 ANCHORING POSTS

A. Use steel pipe sleeves preset and anchored into concrete for installing posts. After posts have been inserted into sleeves, fill annular space between post and sleeve with the following anchoring material, mixed and placed to comply with anchoring material manufacturer’s written instructions:

1. Nonshrink, nonmetallic grout or anchoring cement.

B. Cover anchorage joint with a flange of same metal as post, attached to post as follows:

1. Welded to post after placing anchoring material.

3.4 ANCHORING RAIL ENDS

A. Anchor rail ends to concrete and masonry with brackets on underside of rail connected to rail ends and anchored with postinstalled anchors and bolts.

3.5 ATTACHING HANDRAILS TO WALLS

A. Attach handrails to wall with wall brackets. Provide bracket with 1-1/2-inch (38 mm) clearance from inside face of handrail and finished wall surface.

B. Locate brackets as indicated or, if not indicated, at spacing required to support structural loads.

C. Secure wall brackets to building construction as follows:

1. For concrete and solid masonry anchorage, use drilled-in expansion shields and hanger or lag bolts.
2. For hollow masonry anchorage, use toggle bolts.

3.6 CLEANING

A. Touchup Painting: Cleaning and touchup painting of field welds, bolted connections, and abraded areas of shop paint are specified in Division 9 Section “Painting.”

B. Galvanized Surfaces: Clean field welds, bolted connections, and abraded areas and repair galvanizing to comply with ASTM A 780.

3.7 PROTECTION

A. Protect finishes of handrails and railings from damage during construction period with temporary protective coverings approved by railing manufacturer. Remove protective coverings at the time of Substantial Completion.

B. Restore finishes damaged during installation and construction period so no evidence remains of correction work. Return items that cannot be refinished in field to shop; make required alterations and refinish entire unit, or provide new units.

END OF SECTION 05 7300

SECTION 05 7500 - DECORATIVE FORMED METAL

PART 1 - GENERAL

1.1 RELATED DOCUMENTS

A. Drawings and general provisions of the Contract, including General and Supplementary Conditions and Division 01 Specification Sections, apply to this Section.

1.2 SUMMARY

A. Section Includes:

1. Architectural Stamped Grilles.

B. Related Sections:

1. Section 06 40 00 - Architectural Woodwork: Grilles, registers, diffusers and bar grates for custom casework.
2. Section 23 30 00 - HVAC Air Distribution: Grilles, registers, diffusers and bar grates for terminal fixtures for ductwork.

1.3 PERFORMANCE REQUIREMENTS

A. Structural Performance: Decorative formed metal items, including anchors and connections, shall withstand the effects of gravity loads and the following loads and stresses without exceeding the allowable design working stress of materials involved and without exhibiting permanent deformation in any components:

B. Thermal Movements: Allow for thermal movements from ambient and surface temperature changes acting on exterior metal fabrications by preventing buckling, opening of joints, overstressing of components, failure of connections, and other detrimental effects.

1. Temperature Change: 120 deg F (67 deg C), ambient; 180 deg F (100 deg C), material surfaces.

C. Control of Corrosion: Prevent galvanic action and other forms of corrosion by insulating metals and other materials from direct contact with incompatible materials.

1.4 ACTION SUBMITTALS

A. Product Data: For each type of product indicated. Include finishing materials.

B. Shop Drawings: Show fabrication and installation details for decorative formed metal.

1. Include plans, elevations, component details, and attachments to other work.
2. Indicate materials and profiles of each decorative formed metal member, fittings, joinery, finishes, fasteners, anchorages, and accessory items.

C. Samples for Initial Selection: For products involving selection of color, texture, or design, including mechanical finishes.

1.5 INFORMATIONAL SUBMITTALS

A. Coordination Drawings: For decorative formed metal elements that house items specified in other Sections. Show dimensions of housed items, including locations of housing penetrations and attachments, and necessary clearances.

1.6 DELIVERY, STORAGE, AND HANDLING

A. Deliver decorative formed metal products wrapped in protective coverings and strapped together in suitable packs or in heavy-duty cartons.

B. Store unopened packaged products on elevated platforms in a dry, heated location.

1.7 PROJECT CONDITIONS

A. Field Measurements: Verify actual locations of Aluminum Curtain Wall Frames contiguous with decorative formed metal by field measurements before fabrication and indicate measurements on Shop Drawings.

1.8 COORDINATION

A. Coordinate installation of anchorages for decorative formed metal items. Furnish setting drawings, templates, and directions for installing anchorages.

B. Coordinate installation of decorative formed metal with adjacent construction to ensure that wall assemblies, flashings, trim, and joint sealants, are protected against damage from the effects of weather, age, corrosion, and other causes.

PART 2 - PRODUCTS

2.1 SHEET METAL

A. General: Provide sheet metal without pitting, seam marks, roller marks, stains, discolorations, or other imperfections where exposed to view on finished units.

B. Aluminum Sheet: Flat sheet complying with ASTM B 209 (ASTM B 209M), alloy and temper recommended by aluminum producer and finisher for type of use and finish indicated, and with not less than strength and durability properties of Alloy 5005-H32.

2.2 MISCELLANEOUS MATERIALS

A. Sealants, Interior: Nonsag, paintable, nonstaining, latex sealant complying with ASTM C 834; of type and grade required to seal joints in decorative formed metal; and as recommended in writing by decorative formed metal manufacturer.

1. Use sealant that has a VOC content of not more than 250 g/L when calculated according to 40 CFR 59, Subpart D (EPA Method 24).

B. Fasteners: Fabricated from same basic metal and alloy as fastened metal unless otherwise indicated. Do not use metals that are incompatible with materials joined.

1. Provide concealed fasteners for interconnecting decorative formed metal items and for attaching them to other work unless otherwise indicated.

2.3 ARCHITECTURAL STAMPED AND GRILLES.

A. Acceptable Manufacturers: KEES, Inc. Architectural Division Profile: Rectangular face.

B. Requests for substitutions will be considered in accordance with provisions of Section 01 6000.

C. Profile: Rectangular Face.

D. Dimensions: Refer to drawings for grille and dimensions.

E. Application: Opposed Blade Damper (OBD): Provide where scheduled or as required.

F. Mounting: Concealed mounted with integral angle: Mounting D, into curtain wall frame.

G. Material and Thickness: Stainless Steel Type 304: 14 gauge (1.90 mm) through 10 gauge (3.42 mm).

H. Finish: Epoxy Paint, Match curtain wall frame.

I. Pattern: Kees, Inc. RE188 RECTANGULAR CANE.

2.4 FORMED METAL CLOSEURES

A. Manufacturers: Subject to compliance with requirements, provide products by one of the following:

1. Fry Reglet Corporation.
2. Pittcon Industries.
3. Forman Fabricators, Inc.

B. Form closures and trim from metal of type and thickness indicated below. Fabricate to fit tightly to adjoining construction

1. Galvanized-Steel Sheet: 0.052 inch (1.32 mm).

a. Finish: Factory primed.

2.5 FABRICATION, GENERAL

A. Shop Assembly: Preassemble decorative formed metal items in shop to greatest extent possible to minimize field splicing and assembly. Disassemble units only as necessary for shipping and handling limitations. Clearly mark units for reassembly and coordinated installation.

B. Coordinate dimensions and attachment methods of decorative formed metal items with those of adjoining construction to produce integrated assemblies with closely fitting joints and with edges and surfaces aligned unless otherwise indicated.

C. Form metal to profiles indicated, in maximum lengths to minimize joints. Produce flat, flush surfaces without cracking or grain separation at bends. Fold back exposed edges of unsupported sheet metal to form a 1/2-inch- (12-mm-) wide hem on the concealed side, or ease edges to a radius of approximately 1/32 inch (1 mm) and support with concealed stiffeners.

D. Increase metal thickness or reinforce with concealed stiffeners, backing materials, or both, as needed to provide surface flatness equivalent to stretcher-leveled standard of flatness and sufficient strength for indicated use.

E. Support joints with concealed stiffeners as needed to hold exposed faces of adjoining sheets in flush alignment.

F. Build in straps, plates, and brackets as needed to support and anchor fabricated items to adjoining construction. Reinforce decorative formed metal items as needed to attach and support other construction.

G. Provide support framing, mounting and attachment clips, splice sleeves, backplates, fasteners, and accessories needed to install decorative formed metal items.

2.6 GENERAL FINISH REQUIREMENTS

A. Comply with NAAMM's "Metal Finishes Manual for Architectural and Metal Products" for recommendations for applying and designating finishes.

B. Complete mechanical finishes of flat sheet metal surfaces before fabrication where possible. After fabrication, finish all joints, bends, abrasions, and other surface blemishes to match sheet finish.

C. Protect mechanical finishes on exposed surfaces from damage by applying a strippable, temporary protective covering before shipping.

D. Apply organic and anodic finishes to formed metal after fabrication unless otherwise indicated.

E. Appearance of Finished Work: Variations in appearance of abutting or adjacent pieces are acceptable if they are within one-half of the range of approved Samples. Noticeable variations in the same piece are not acceptable. Variations in appearance of other components are acceptable if they are within the range of approved Samples and are assembled or installed to minimize contrast.

2.7 ALUMINUM FINISHES

A. Architectural Stamped and Lattice Return Air Grilles: Baked Enamel or Powder Coat.

PART 3 - EXECUTION

3.1 EXAMINATION

A. Examine substrates, areas, and conditions, with Installer present, for compliance with requirements for installation tolerances and other conditions affecting performance of decorative formed metal.

B. Proceed with installation only after unsatisfactory conditions have been corrected.

C. If substrate preparation is the responsibility of another installer, notify Architect of unsatisfactory preparation before proceeding.

3.2 INSTALLATION

A. Locate and place decorative formed metal items level and plumb and in alignment with adjacent construction. Perform cutting, drilling, and fitting required to install decorative formed metal.

1. Do not cut or abrade finishes that cannot be completely restored in the field. Return items with such finishes to the shop for required alterations, followed by complete refinishing, or provide new units as required.

B. Use concealed anchorages where possible. Provide brass or lead washers fitted to screws where needed to protect metal surfaces.

C. Form tight joints with exposed connections accurately fitted together. Provide reveals and openings for sealants and joint fillers as indicated.

D. Install concealed gaskets, joint fillers, insulation, sealants, and flashings, as the Work progresses, to make exterior decorative formed metal items weatherproof.

3.3 ADJUSTING AND CLEANING

A. Unless otherwise indicated, clean metals by washing thoroughly with clean water and soap, rinsing with clean water, and drying with soft cloths.

B. Restore finishes damaged during installation and construction period so no evidence remains of correction work. Return items that cannot be refinished in the field to the shop; make required alterations and refinish entire unit or provide new units.

3.4 PROTECTION

A. Protect finishes of decorative formed metal items from damage during construction period. Remove temporary protective coverings at time of Substantial Completion.

END OF SECTION 05 7500

SECTION 06 1053 - MISCELLANEOUS ROUGH CARPENTRY

PART 1 - GENERAL

1.1 RELATED DOCUMENTS

A. Drawings and general provisions of the Contract, including General and Supplementary Conditions and Division 01 Specification Sections, apply to this Section.

1.2 SUMMARY

A. Section Includes:

1. Wood blocking and nailers.
2. Plywood backing panels.
3. Wall sheathing
4. Cement Board for Wall Tile Backerboard.

B. Related Requirements:

1. Division 06 Section "Sheathing."

1.3 DEFINITIONS

A. Dimension Lumber: Lumber of 2 inches nominal (38 mm actual) or greater but less than 5 inches nominal (114 mm actual) in least dimension.

B. Lumber grading agencies, and the abbreviations used to reference them, include the following:

1. NeLMA: Northeastern Lumber Manufacturers' Association.
2. NHLA: National Hardwood Lumber Association.
3. NLGA: National Lumber Grades Authority.
4. SPIB: The Southern Pine Inspection Bureau.
5. WCLIB: West Coast Lumber Inspection Bureau.
6. WWPA: Western Wood Products Association.

1.4 ACTION SUBMITTALS

A. Product Data: For each type of process and factory-fabricated product. Indicate component materials and dimensions and include construction and application details.

1. Include data for wood-preservative treatment from chemical treatment manufacturer and certification by treating plant that treated materials comply with requirements. Indicate type of preservative used and net amount of preservative retained.
2. Include data for fire-retardant treatment from chemical treatment manufacturer and certification by treating plant that treated materials comply with requirements. Include physical properties of treated materials based on testing by a qualified independent testing agency.

3. For fire-retardant treatments, include physical properties of treated lumber both before and after exposure to elevated temperatures, based on testing by a qualified independent testing agency according to ASTM D 5664.
4. For products receiving a waterborne treatment, include statement that moisture content of treated materials was reduced to levels specified before shipment to Project site.

1.5 INFORMATIONAL SUBMITTALS

A. Evaluation Reports: For the following, from ICC-ES:

1. Preservative-treated wood.
2. Power-driven fasteners.
3. Powder-actuated fasteners.
4. Expansion anchors.

1.6 DELIVERY, STORAGE, AND HANDLING

A. Stack lumber flat with spacers beneath and between each bundle to provide air circulation. Protect lumber from weather by covering with waterproof sheeting, securely anchored. Provide for air circulation around stacks and under coverings.

PART 2 - PRODUCTS

2.1 WOOD PRODUCTS, GENERAL

A. Lumber: DOC PS 20 and applicable rules of grading agencies indicated. If no grading agency is indicated, provide lumber that complies with the applicable rules of any rules-writing agency certified by the ALSC Board of Review. Provide lumber graded by an agency certified by the ALSC Board of Review to inspect and grade lumber under the rules indicated.

1. Factory mark each piece of lumber with grade stamp of grading agency.
2. For exposed lumber indicated to receive a stained or natural finish, mark grade stamp on end or back of each piece or omit grade stamp and provide certificates of grade compliance issued by grading agency.
3. Where nominal sizes are indicated, provide actual sizes required by DOC PS 20 for moisture content specified. Where actual sizes are indicated, they are minimum dressed sizes for dry lumber.
4. Provide dressed lumber, S4S, unless otherwise indicated.

B. Maximum Moisture Content of Lumber: 19 percent unless otherwise indicated.

2.2 WOOD-PRESERVATIVE-TREATED MATERIALS

A. Preservative Treatment by Pressure Process: AWPA U1; Use Category UC2 for interior construction not in contact with the ground, Use Category UC3b for exterior construction not in contact with the ground, and Use Category UC4a for items in contact with the ground.

1. Preservative Chemicals: Acceptable to authorities having jurisdiction and containing no arsenic or chromium.

B. Kiln-dry lumber after treatment to a maximum moisture content of 19 percent. Do not use material that is warped or does not comply with requirements for untreated material.

C. Mark lumber with treatment quality mark of an inspection agency approved by the ALSC Board of Review.

1. For exposed lumber indicated to receive a stained or natural finish, mark end or back of each piece.

D. Application: Treat items indicated on Drawings, and the following:

1. Wood cants, nailers, curbs, equipment support bases, blocking, stripping, and similar members in connection with roofing, flashing, vapor barriers, and waterproofing.
2. Wood sills, sleepers, blocking, and similar concealed members in contact with masonry or concrete.

2.3 FIRE-RETARDANT-TREATED MATERIALS

A. General: Comply with performance requirements in AWPA C20 (lumber) and AWPA C27 (plywood)

1. Use Exterior type for exterior locations and where indicated.
2. Use Interior Type A, High Temperature (HT) for enclosed roof framing, framing in attic spaces, and where indicated.
3. Use Interior type A, unless otherwise indicated.

B. Identify fire-retardant-treated wood with appropriate classification marking of testing and inspecting agency acceptable to authorities having jurisdiction.

C. Application: Treat items indicated on Drawings, and the following:

1. Concealed blocking.
2. Roof construction.
3. Plywood backing panels.
4. Cants

2.4 MISCELLANEOUS LUMBER

A. General: Provide miscellaneous lumber indicated and lumber for support or attachment of other construction, including the following:

1. Blocking.
2. Nailers.
3. Furring.

B. For items of dimension lumber size, provide Construction or No. 2 grade lumber and any of the following species:

1. Hem-fir (north); NLGA.
2. Hem-fir; WCLIB or WWPA.

C. For concealed boards, provide lumber with 19 percent maximum moisture content and any of the following species and grades:

1. Hem-fir or hem-fir (north), Construction or No. 2 Common grade; NLGA, WCLIB, or WWPA.

D. For blocking not used for attachment of other construction, Utility, Stud, or No. 3 grade lumber of any species may be used provided that it is cut and selected to eliminate defects that will interfere with its attachment and purpose.

E. For blocking and nailers used for attachment of other construction, select and cut lumber to eliminate knots and other defects that will interfere with attachment of other work.

F. For furring strips for installing plywood or hardboard paneling, select boards with no knots capable of producing bent-over nails and damage to paneling.

2.5 FIRE-RETARDANT-TREATED PLYWOOD

A. General: Comply with performance requirements in AWPA C27.

1. Use treatment that does not promote corrosion of metal fasteners.
2. Use Exterior type for exterior locations and where indicated.
3. Use Interior type A, High Temperature (HT) for roof sheathing and where indicated.
4. Use Interior Type A, unless otherwise indicated.

B. Kiln-dry material after treatment to a maximum moisture content of 15 percent. Do not use material that is warped or does not comply with requirements for untreated material.

C. Identify fire-retardant-treated plywood with appropriate classification marking of UL, U.S. Testing, timber Products Inspection, or another testing and inspecting agency acceptable to authorities having jurisdiction.

D. Application: Treat all plywood, unless otherwise indicated.

1. Roof and wall sheathing within 48 inches of fire walls.
2. Subflooring and underlayment for raised platforms.

E. Plywood Wall Sheathing: Exterior Exposure 1, Structural I sheathing.

1. Span Rating: As required by code.
2. Nominal thickness: As indicated on drawings.

2.6 PLYWOOD BACKING PANELS

A. Equipment Backing Panels: DOC PS 1, Exposure 1, C-D Plugged, fire-retardant treated, in thickness indicated or, if not indicated, not less than 1/2-inch (13-mm) nominal thickness.

2.7 WALL SHEATHING

A. Glass-Mat Gypsum Wall Sheathing: ASTM C 1177/1177M.

1. Products: Subject to compliance with requirements, available products that may be incorporated into the Work include, but are not limited to, the following:
   a. CertainTeed Corporation; GlasRoc.
   b. G-P Gypsum Corporation; Dens-Glass Gold.
   c. National Gypsum Company; Gold Bond e(2)XP.
   d. United States Gypsum Co.; Securock.
2. Type and Thickness: Type X, 5/8 inch thick.
3. Size: 48 by 96 inches for vertical installation.

B. Cementitious Backer Units: ASTM C 1325, Type A.

1. Products: Subject to compliance with requirements, available products that may be incorporated into the Work include, but are not limited to, the following:
   a. James Hardie Industries: Hardy Board
   b. USG Corporation; DUROCK Cement Board.
2. Thickness: 5/8 inch.

2.8 FASTENERS

A. General: Provide fasteners of size and type indicated that comply with requirements specified in this article for material and manufacture.

1. Where carpentry is exposed to weather, in ground contact, pressure-preservative treated, or in area of high relative humidity, provide fasteners with hot-dip zinc coating complying with ASTM A 153/A 153M.

2. For wall sheathing, provide fasteners **with hot-dip zinc coating complying with ASTM A 153/A 153M**.

B. Nails, Brads, and Staples: ASTM F 1667.

C. Screws for Fastening Gypsum Sheathing to Cold-Formed Metal Framing: Steel drill screws, in length recommended by sheathing manufacturer for thickness of sheathing to be attached, with organic-polymer or other corrosion-protective coating having a salt-spray resistance of more than 800 hours according to ASTM B 117.

1. For steel framing less than 0.0329 inch thick, use steel drill screws that comply with ASTM C 1002.

D. Power-Driven Fasteners: NES NER-272.

E. Wood Screws: ASME B18.6.1.

F. Screws for Fastening to Metal Framing: ASTM C 1002, length as recommended by screw manufacturer for material being fastened.

G. Lag Bolts: ASME B18.2.1 (ASME B18.2.3.8M).

H. Bolts: Steel bolts complying with ASTM A 307, Grade A (ASTM F 568M, Property Class 4.6); with ASTM A 563 (ASTM A 563M) hex nuts and, where indicated, flat washers.

I. Expansion Anchors: Anchor bolt and sleeve assembly of material indicated below with capability to sustain, without failure, a load equal to 6 times the load imposed when installed in

unit masonry assemblies and equal to 4 times the load imposed when installed in concrete as determined by testing per ASTM E 488 conducted by a qualified independent testing and inspecting agency.

1. Material: Carbon-steel components, zinc plated to comply with ASTM B 633, Class Fe/Zn 5.

2.9 SHEATHING JOINT-AND-PENETRATION TREATMENT MATERIALS

A. Sealant for Glass-Mat Gypsum Sheathing:
1. Silicone emulsion sealant complying with ASTM C 834, compatible with sheathing tape and sheathing and recommended by tape and sheathing manufacturers for use with glass-fiber sheathing tape and for covering exposed fasteners.
2. Sheathing Tape: Self-adhering glass-fiber tape, minimum 2 inches wide, 10 by 10 or 10 by 20 threads/inch, of type recommended by sheathing and tape manufacturers for use with silicone emulsion sealant in sealing joints in glass-mat gypsum sheathing and with a history of successful in-service use.

PART 3 - EXECUTION

3.1 INSTALLATION, GENERAL

A. Set carpentry to required levels and lines, with members plumb, true to line, cut, and fitted. Fit carpentry to other construction; scribe and cope as needed for accurate fit. Locate nailers, blocking, and similar supports to comply with requirements for attaching other construction.

B. Where wood-preservative-treated lumber is installed adjacent to metal decking, install continuous flexible flashing separator between wood and metal decking.

C. Install plywood backing panels by fastening to studs; coordinate locations with utilities requiring backing panels.

D. Install plywood blocking by fastening to studs or other blocking where shown, or in place of lumber blocking where appropriate; coordinate locations with other items. Install fire-retardant treated plywood with classification marking of testing agency on outermost surface of the assembly where possible.

E. Provide blocking and framing as indicated and as required to support facing materials, fixtures, specialty items, and trim.

F. Sort and select lumber so that natural characteristics will not interfere with installation or with fastening other materials to lumber. Do not use materials with defects that interfere with function of member or pieces that are too small to use with minimum number of joints or optimum joint arrangement.

G. Comply with AWPA M4 for applying field treatment to cut surfaces of preservative-treated lumber.

1. Use inorganic boron for items that are continuously protected from liquid water.
2. Use copper naphthenate for items not continuously protected from liquid water.

H. Securely attach to substrate by anchoring and fastening as indicated, complying with the following:

1. NES NER-272 for power-driven fasteners.
2. Table 2304.9.1, "Fastening Schedule," in ICC's International Building Code.

I. Use steel common nails unless otherwise indicated. Select fasteners of size that will not fully penetrate members where opposite side will be exposed to view or will receive finish materials. Make tight connections between members. Install fasteners without splitting wood. Drive nails snug but do not countersink nail heads unless otherwise indicated.

J. Cut panels at penetrations, edges, and other obstructions of work; fit tightly against abutting construction unless otherwise indicated.

K. Coordinate wall sheathing installation with flashing and joint-sealant installation so these materials are installed in sequence and manner that prevent exterior moisture from passing through completed assembly.

L. Do not bridge building expansion joints; cut and space edges of panels to match spacing of structural support elements.

M. Coordinate sheathing installation with installation of materials installed over sheathing so sheathing is not exposed to precipitation or left exposed at end of the workday when rain is forecast.

3.2 GYPSUM SHEATHING INSTALLATION

A. Comply with GA-253 and with manufacturer's written instructions.

1. Fasten gypsum sheathing to cold-formed metal framing with screws.
2. Install boards with a 3/8-inch gap where non-load-bearing construction abuts structural elements.
3. Install boards with a 1/4-inch gap where they abut masonry or similar materials that might retain moisture, to prevent wicking.

B. Apply fasteners so heads bear tightly against face of sheathing, but do not cut into facing.

C. Vertical Installation: Install board vertical edges centered over studs. Abut ends and edges of each board with those of adjacent boards. Attach boards at perimeter and within field of board to each stud.

1. Space fasteners approximately 8 inches o.c. and set back a minimum of 3/8 inch from edges and ends of boards.

D. Seal sheathing joints according to sheathing manufacturer's written instructions.

1. Apply elastomeric sealant to joints and fasteners and trowel flat. Apply sufficient amount of sealant to completely cover joints and fasteners after troweling. Seal other penetrations and openings.
2. Apply glass-fiber sheathing tape to glass-mat gypsum sheathing joints and apply and trowel silicone emulsion sealant to embed entire face of tape in sealant. Apply sealant to exposed fasteners with a trowel so fasteners are completely covered. Seal other penetrations and openings.

3.3 CEMENTITIOUS BACKER UNIT INSTALLATION

A. Install panels and treat joints according to ANSI A108.11 and manufacturer's written instructions for type of application indicated.

3.4 WOOD BLOCKING, AND NAILER INSTALLATION

A. Install where indicated and where required for attaching other work. Form to shapes indicated and cut as required for true line and level of attached work. Coordinate locations with other work involved.

B. Attach items to substrates to support applied loading. Recess bolts and nuts flush with surfaces unless otherwise indicated.

C. Provide permanent grounds of dressed, pressure-preservative-treated, key-beveled lumber not less than 1-1/2 inches (38 mm) wide and of thickness required to bring face of ground to exact thickness of finish material. Remove temporary grounds when no longer required.

D. Attach items to substrates with fasteners to provide Class 1A-90 rated uplift and pullout resistance required by roofing system manufacturer.

3.5 PROTECTION

A. Protect wood that has been treated with inorganic boron (SBX) from weather. If, despite protection, inorganic boron-treated wood becomes wet, apply EPA-registered borate treatment. Apply borate solution by spraying to comply with EPA-registered label.

B. Protect miscellaneous rough carpentry from weather. If, despite protection, miscellaneous rough carpentry becomes wet, apply EPA-registered borate treatment. Apply borate solution by spraying to comply with EPA-registered label.

END OF SECTION 06 1053

SECTION 06 4023 - INTERIOR ARCHITECTURAL WOODWORK

PART 1 - GENERAL

1.1 RELATED DOCUMENTS

A. Drawings and general provisions of the Contract, including General and Supplementary Conditions and Division 01 Specification Sections, apply to this Section.

1.2 SUMMARY

A. This Section includes the following:
1. Plastic-laminate cabinets.
2. Solid-surfacing-material countertops.
3. Solid-surfacing-material window sills.

B. Related Sections include the following:

1. Divison 05 Section “Metal Fabrications” for steel counter supports.
2. Divison 09 Section “Non-Structural Metal Framing” for steel stud framing.
3. Division 06 Section "Miscellaneous Rough Carpentry" for wood furring, blocking, shims, and hanging strips required for installing woodwork and concealed within other construction before woodwork installation.

1.3 DEFINITIONS

A. Interior architectural woodwork includes wood furring, blocking, shims, and hanging strips for installing woodwork items unless concealed within other construction before woodwork installation.

B. Exposed surface of casework: Surfaces visible when doors and drawers are closed, including bottoms of cabinets more than 48 inches (1200 mm) above floor, and visible surfaces in open cabinets or behind glass doors.
1. Ends of cabinets indicated to be installed directly against and completely concealed by wall or other cabinets are defines as “concealed”.

C. Semi-exposed surfaces of casework: Surfaces behind opaque doors, such as cabinet interiors, shelves and dividers; interiors and sides of drawers; and interior faces of doors. Tops of cabines 78 inches (1980 mm) or more above floor are defined as “semi-exposed”.

D. Concealed portions of casework included sleepers, we frames, dust panels and other surfaces not usually visible after installation.

1.4 ACTION SUBMITTALS

A. Product Data: For each type of product indicated, including cabinet hardware and accessories.

B. Product Data: For panel products high-pressure decorative laminate adhesive for bonding plastic laminate solid-surfacing material cabinet hardware and accessories.

C. Shop Drawings: Show location of each item, dimensioned plans and elevations, large-scale details, attachment devices, and other components.

1. Show details full size.
2. Show locations and sizes of furring, blocking, and hanging strips, including concealed blocking and reinforcement specified in other Sections.
3. Show locations and sizes of cutouts and holes for plumbing fixtures faucets and other items installed in architectural woodwork.

D. Samples for Verification:

1. Plastic laminates, 8 by 10 inches (200 by 250 mm), for each type, color, pattern, and surface finish.
2. PVC edge material.
3. Solid-surfacing materials, 6 inches (150 mm) square.
4. Exposed cabinet hardware and accessories, one unit for each type.

1.5 INFORMATIONAL SUBMITTALS

A. Qualification Data: For Installer.

B. Product Certificates: For each type of product, signed by product manufacturer.

C. Special Warranty: Manufacturer's standard form in which manufacturer agrees to repair or replace components of manufactured wood casework that fail in materials or workmanship within specified period.
1. Failures include, but are not limited to, the following:
   a. Delamination of components or other failures of glue bond.
   b. Warping of components.
   c. Failure of operating hardware.
   d. Deterioration of finishes.

2. Warranty Period: Five years from date of Substantial Completion.

1.6 QUALITY ASSURANCE

A. Manufacturers Qualifications

1. Materials and systems shall be manufactured by a company continuously and regularly employed in the manufacture of specified materials for a period of at least five (5) consecutive years and which can show evidence of those materials being satisfactorily used on at least six (6) projects of similar size, scope and location. At least three (3) of the projects shall have been successful for use five (5) years or longer.

B. Source Limitations: Engage a qualified woodworking firm to assume undivided responsibility for production of interior architectural woodwork, solid surface counters and sills, and other fabrications of millwork as a whole. Multiple trades will not be accepted.

C. Pre-installation Conference: Conduct conference at Project site to comply with requirements in Division 01 Section "Project Management and Coordination."

1.7 DELIVERY, STORAGE, AND HANDLING

A. Do not deliver woodwork until painting and similar operations that could damage woodwork have been completed in installation areas. If woodwork must be stored in other than installation

areas, store only in areas where environmental conditions comply with requirements specified in "Project Conditions" Article.

B. Deliver Plastic Fabrications, systems and specified items in manufacturer's standard protective packaging.

C. Do not deliver Plastic Fabrications, system, components and accessories to Project site until areas are ready for installation.

D. Store materials in a flat orientation in a dry place that is not exposed to exterior elements.

E. Store products in manufacturer's unopened packaging until ready for installation.

F. Stack panels using protective dividers to avoid damage to decorative surface.

G. For horizontal storage, store sheets on pallets of equal or greater size as the sheets with a protective layer between the pallet and sheet and on top of the uppermost sheet. Do not store sheets, or fabricated panels vertically.

H. Handle materials to prevent damage to finished surfaces. Provide protective coverings to prevent damage or staining following installation for duration of project.

I. Before installing Plastic Fabrications, permit them to reach room temperature.

1.8 PROJECT CONDITIONS

A. Environmental Limitations: Do not deliver or install woodwork until building is enclosed, wet work is complete, and HVAC system is operating and maintaining temperature and relative humidity at occupancy levels during the remainder of the construction period.

B. Environmental Limitations: Do not deliver or install woodwork until building is enclosed, wet work is complete, and HVAC system is operating and maintaining temperature between 60 and 90 deg F (16 and 32 deg C) and relative humidity between 25 and 55 percent during the remainder of the construction period.

C. Field Measurements: Where woodwork is indicated to fit to other construction, verify dimensions of other construction by field measurements before fabrication, and indicate measurements on Shop Drawings. Coordinate fabrication schedule with construction progress to avoid delaying the Work.

1. Locate concealed framing, blocking, and reinforcements that support woodwork by field measurements before being enclosed, and indicate measurements on Shop Drawings.
2. Established Dimensions: Where field measurements cannot be made without delaying the Work, establish dimensions and proceed with fabricating woodwork without field measurements. Provide allowance for trimming at site, and coordinate construction to ensure that actual dimensions correspond to established dimensions.

1.9 COORDINATION

A. Coordinate sizes and locations of framing, blocking, furring, reinforcements, and other related units of Work specified in other Sections to ensure that interior architectural woodwork can be supported and installed as indicated.

B. Hardware Coordination: Distribute copies of approved hardware schedule specified in Division 08 Section "Door Hardware (Scheduled by Describing Products)" to fabricator of architectural woodwork; coordinate Shop Drawings and fabrication with hardware requirements.

PART 2 - PRODUCTS

2.1 MATERIALS

A. General: Provide materials that comply with requirements of AWI's quality standard for each type of woodwork and quality grade specified, unless otherwise indicated.

B. Certified Wood: Interior architectural woodwork shall be produced from wood obtained from forests certified by an FSC accredited certification body to comply with FSC STD-01-001, "FSC Principles and Criteria for Forest Stewardship."

C. Wood Products: Comply with the following:

1. Hardboard: AHA A135.4.
2. Medium-Density Fiberboard: ANSI A208.2, Grade MD, made with binder containing no urea formaldehyde.
3. Particleboard: ANSI A208.1, Grade M-2, made with binder containing no urea formaldehyde.
4. Particleboard: Straw-based particleboard complying with requirements in ANSI A208.1, Grade M-2, except for density.
5. Veneer-Faced Panel Products (Hardwood Plywood): HPVA HP-1, made with adhesive containing no urea formaldehyde.

D. High-Pressure Decorative Laminate: NEMA LD 3, grades as indicated or, if not indicated, as required by woodwork quality standard.

1. Manufacturer: Subject to compliance with requirements, provide high-pressure decorative laminates by one of the following:

a. Formica Corporation.
b. Lamin-Art, Inc.
c. Pionite
d. Wilsonart International

E. Solid-Surfacing Material: Homogeneous solid sheets of filled plastic resin complying with ISSFA-2.

1. Manufacturers: Subject to compliance with requirements, provide products by one of the following:

a. Du Pont, Corian, Grades A, B, or C.
b. LG Chemical, Ltd., Classics
c. Samsung; Cheil Industries Inc.
d. Wilsonart International; Div. of Premark International, Inc.

2. Edge: Eased edge
3. Colors and Patterns: As selected by Architect from manufacturer’s full line of colors. Up to 4 colors may be used.

F. Shelf Standards and Shelf Brackets

1. Manufacturers: Subject to compliance with requirements, provide products by one of the following:

   a. Rakks
   b. Marlite (Basis of Design)
   c. Udizine

2. Colors and Patterns: As selected by Architect from manufacturer's full range.

G. Thermoplastic Panels:

1. Source Limitations: Obtain acrylic panel, including digital image produced on panel, and fasteners, from single source from single manufacturer. Provide secondary materials, including patching and fill material, joint sealant, and repair materials, of type and from source recommended by manufacturer of primary materials.

2. Manufacturers: Subject to compliance with requirements, provide products by one of the following:

   a. Koroseal, Inc.(Basis of Design)
   b. Knoll
   c. Lumicor, Inc:

2.2 CABINET HARDWARE AND ACCESSORIES

A. General: Provide cabinet hardware and accessory materials associated with architectural cabinets, except for items specified in Division 08 Section "Door Hardware (Scheduled by Describing Products)."

B. Frameless Concealed Hinges (European Type): BHMA A156.9, B01602, 170 degrees of opening.

C. Back-Mounted Pulls: BHMA A156.9, B02011.

1. Basis of Design: Hafele 124.02.920 Drawer Pulls

D. Door and Drawer Pulls: Back mounted, solid.

1. Basis of Design: Hafele 115.20.002 Door Pulls

E. Adjustable Shelf Standards and Supports: BHMA A156.9, B04102; with shelf brackets, B04112.

F. Shelf Rests: BHMA A156.9, B04013; metal, two-pin type with shelf hold-down clip.

G. Drawer Slides: BHMA A156.9, B05091.

1. Heavy Duty (Grade 1HD-100 and Grade 1HD-200): Side mounted; full-extension type; zinc-plated steel ball-bearing slides.

2. Box Drawer Slides: Grade 1HD-100; for drawers not more than 6 inches (150 mm) high and 24 inches (600 mm) wide.
3. File Drawer Slides: Grade 1HD-100; for drawers more than 6 inches (150 mm) high or 24 inches (600 mm) wide.

4. Pencil Drawer Slides: Grade 2; for drawers not more than 3 inches (75 mm) high and 24 inches (600 mm) wide.

H. Grommets for Cable Passage through Countertops: molded-plastic grommets and matching plastic caps with slot for wire passage.

1. Product: Subject to compliance with requirements, provide “RG series" by Doug Mockett & Company, Inc.
2. Color selected by Architect from Manufacturer’s full range.

I. Exposed Hardware Finishes: For exposed hardware, provide finish that complies with BHMA A156.18 for BHMA finish number indicated.

1. Satin Stainless Steel: BHMA 630.

J. For concealed hardware, provide manufacturer's standard finish that complies with product class requirements in BHMA A156.9.

2.3 MISCELLANEOUS MATERIALS

A. Furring, Blocking, Shims, and Hanging Strips: Softwood or hardwood lumber, kiln dried to less than 15 percent moisture content.

B. Anchors: Select material, type, size, and finish required for each substrate for secure anchorage. Provide nonferrous-metal or hot-dip galvanized anchors and inserts on inside face of exterior walls and elsewhere as required for corrosion resistance. Provide toothed-steel or lead expansion sleeves for drilled-in-place anchors.

C. Adhesives, General: Adhesives shall not contain urea formaldehyde.

D. VOC Limits for Installation Adhesives: Installation adhesives shall comply with the following limits for VOC content when calculated according to 40 CFR 59, Subpart D (EPA Method 24):

1. Wood Glues: 30 g/L.
2. Multipurpose Construction Adhesives: 70 g/L.
3. Contact Adhesive: 250 g/L.

E. Adhesive for Bonding Plastic Laminate: Unpigmented contact cement.

1. Adhesive for Bonding Edges: Hot-melt adhesive.

F. Materials for Acrylic / Resin Panel

1. Cleaner: Type recommended by manufacturer.
2. Fasteners: Use screws designed specifically for plastics. Self-threading screws are acceptable for permanent installations. Provide threaded metal inserts for applications requiring frequent disassembly such as light fixtures.
3. Drilled Panel Wall Anchors: As provided by the manufacturer. Provide extensions to accommodate thicknesses scheduled or illustrated.

2.4 FABRICATION, GENERAL

A. Wood Moisture Content: Comply with requirements of referenced quality standard for wood moisture content in relation to ambient relative humidity during fabrication and in installation areas.

B. Complete fabrication, including assembly and hardware application, to maximum extent possible before shipment to Project site. Disassemble components only as necessary for shipment and installation. Where necessary for fitting at site, provide ample allowance for scribing, trimming, and fitting.

1. Notify Architect seven days in advance of the dates and times woodwork fabrication will be complete.
2. Trial fit assemblies at fabrication shop that cannot be shipped completely assembled. Install dowels, screws, bolted connectors, and other fastening devices that can be removed after trial fitting. Verify that various parts fit as intended and check measurements of assemblies against field measurements indicated on Shop Drawings before disassembling for shipment.

C. Shop-cut openings to maximum extent possible to receive hardware, appliances, plumbing fixtures, electrical work, and similar items. Locate openings accurately and use templates or roughing-in diagrams to produce accurately sized and shaped openings. Sand edges of cutouts to remove splinters and burrs.

1. Seal edges of openings in countertops with a coat of varnish.

2.5 PLASTIC-LAMINATE CABINETS

A. AWI Type of Cabinet Construction: Flush overlay or As indicated.

B. Laminate Cladding for Exposed Surfaces: High-pressure decorative laminate complying with the following requirements:

1. Horizontal Surfaces Other Than Tops: Grade HGS.
2. Postformed Surfaces: Grade HGP.
3. Vertical Surfaces: Grade VGS.
4. Edges: PVC edge banding,0.12 inch (3 mm) thick, matching laminate in color, pattern, and finish].

C. Materials for Semi exposed Surfaces:

1. Surfaces Other Than Drawer Bodies: High-pressure decorative laminate, Grade VGS.

a. Edges of Plastic-Laminate Shelves: PVC tape, 0.018-inch (0.460-mm) minimum thickness, matching laminate in color, pattern, and finish.
b. For semi exposed backs of panels with exposed plastic-laminate surfaces, provide surface of high-pressure decorative laminate, Grade VGS.

2. Drawer Sides and Backs: Solid-hardwood lumber.
3. Drawer Bottoms: Hardwood plywood.

D. Concealed Backs of Panels with Exposed Plastic Laminate Surfaces: High-pressure decorative laminate, Grade BKL.

E. Colors, Patterns, and Finishes: Provide materials and products that result in colors and textures of exposed laminate surfaces complying with the following requirements:

1. As selected by Architect from laminate manufacturer's full range in the following categories:

a. Solid colors, matte finish.
b. Wood grains, matte finish.
c. Patterns, matte finish.

F. Provide dust panels of 1/4-inch (6.4-mm) plywood or tempered hardboard above compartments and drawers, unless located directly under tops.

2.6 SHOP FINISHING

A. Preparation for Finishing: Comply with referenced quality standard for sanding, filling countersunk fasteners, sealing concealed surfaces, and similar preparation for finishing architectural woodwork, as applicable to each unit of work.
1. Back priming: Apply one coat of sealer or primer, compatible with finish coats, to concealed surfaces of woodwork. Apply two coats to back of paneling ant to end-grain surfaces. Concealed surfaces of plastic-laminate, backing paper, or thermoset decorative panels.

2.7 SOLID-SURFACING-MATERIAL COUNTERTOPS

A. Solid-Surfacing-Material Millwork Countertop Thickness: 1/2 inch (13 mm). Knife Edge.

B. Solid-Surfacing-Material Window Sill Thickness: 1/4 inch (7 mm). Square Edge.

C. Solid-Surfacing-Material Restroom Countertop Thickness: 1/2 inch (13 mm). Rounded Edge.

D. Colors, Patterns, and Finishes: Provide materials and products that result in colors of solid-surfacing material complying with the following requirements:

1. As selected by Architect from manufacturer's full range.

E. Fabricate tops in one piece, unless otherwise indicated. Comply with solid-surfacing-material manufacturer's written recommendations for adhesives, sealers, fabrication, and finishing.

1. Fabricate tops with shop-applied edges of materials and configuration indicated.
2. Fabricate tops with loose backsplashes for field application.

F. Drill holes in countertops for plumbing fittings and grommets in shop.

G. Install under-mounted sink bowls in countertops in field, coordinate with plumbing requirements.

H. Support Brackets: At lavatory counter locations, provide support brackets between each sink.

PART 3 - EXECUTION

3.1 PREPARATION

A. Before installation, condition woodwork to average prevailing humidity conditions in installation areas.

B. Before installing architectural woodwork, examine shop-fabricated work for completion and complete work as required, including removal of packing and backpriming.

C. Before installing architectural woodwork for display cases, verify that internal framing and blocking is provided to adequately support weight of glass doors and to anchor top and bottom pivots.

3.2 INSTALLATION

A. Grade: Install woodwork to comply with requirements for the same grade specified in Part 2 for fabrication of type of woodwork involved.

B. Assemble woodwork and complete fabrication at Project site to comply with requirements for fabrication in Part 2, to extent that it was not completed in the shop.

C. Install woodwork level, plumb, true, and straight. Shim as required with concealed shims. Install level and plumb (including tops) to a tolerance of 1/8 inch in 96 inches (3 mm in 2400 mm).

D. Scribe and cut woodwork to fit adjoining work, refinish cut surfaces, and repair damaged finish at cuts.

E. Anchor woodwork to anchors or blocking built in or directly attached to substrates. Secure with countersunk, concealed fasteners and blind nailing as required for complete installation. Use fine finishing nails or finishing screws for exposed fastening, countersunk and filled flush with woodwork and matching final finish if transparent finish is indicated.

F. Cabinets: Install without distortion so doors and drawers fit openings properly and are accurately aligned. Adjust hardware to center doors and drawers in openings and to provide unencumbered operation. Complete installation of hardware and accessory items as indicated.

1. Install cabinets with no more than 1/8 inch in 96-inch (3 mm in 2400-mm) sag, bow, or other variation from a straight line.
2. Fasten wall cabinets through back, near top and bottom, at ends and not more than 16 inches (400 mm) o.c. with No. 10 wafer-head screws sized for 1-inch (25-mm) penetration into wood framing, blocking, or hanging strips No. 10 wafer-head sheet metal screws through metal backing or metal framing behind wall finish.
3. Provide ½” metal reveals, vertically and horizontally, at locations indicated on drawings.
4. Touch up finishing work specified in this Section after installation of woodwork. Fill nail holes with matching filler where exposed.

G. Countertops & Sills: Anchor securely by screwing through corner blocks of base cabinets or other supports into underside of countertop.

1. Align adjacent solid-surfacing-material countertops and form seams to comply with manufacturer's written recommendations using adhesive in color to match countertop. Carefully dress joints smooth, remove surface scratches, and clean entire surface.
2. Install countertops with no more than 1/8 inch in 96-inch (3 mm in 2400-mm) sag, bow, or other variation from a straight line.

3. Secure backsplashes (where located) to tops with concealed metal brackets at 16 inches (400 mm) o.c. and to walls with adhesive.
4. Calk space between backsplash and wall with sealant specified in Division 07 Section "Joint Sealants."

3.3 ADJUSTING AND CLEANING

A. Adjust final panel installation so that all joints are true and even throughout the installation. Panels out of plane shall be adjusted with the surrounding panels to minimize any imperfection.

B. Repair damaged and defective woodwork, where possible, to eliminate functional and visual defects; where not possible to repair, replace woodwork. Adjust joinery for uniform appearance.

C. Clean, lubricate, and adjust hardware.

D. Clean woodwork on exposed and semi exposed surfaces. Touch up shop-applied finishes to restore damaged or soiled areas.

E. Clean all glass doors and shelves. Protect during and after installation against stains and damage during construction.

END OF SECTION 06 4023

SECTION 07 1113 - BITUMINOUS DAMPPROOFING

PART 1 - GENERAL

1.1 RELATED DOCUMENTS

A. Drawings and general provisions of the Contract, including General and Supplementary Conditions and Division 01 Specification Sections, apply to this Section.

1.2 SUMMARY

A. Section Includes:

1. Cold-applied, emulsified-asphalt damp-proofing.

B. Related Requirements:

1. Section 033000 "Cast-in-Place Concrete" for bituminous vapor retarders.

1.3 ACTION SUBMITTALS

A. Product Data: For each type of product.

1.4 FIELD CONDITIONS

A. Weather Limitations: Proceed with application only when existing and forecasted weather conditions permit damp-proofing to be performed according to manufacturers' written instructions.

PART 2 - PRODUCTS

2.1 MATERIALS, GENERAL

A. Source Limitations: Obtain primary damp-proofing materials and primers from single source from single manufacturer. Provide protection course and auxiliary materials recommended in writing by manufacturer of primary materials.

B. VOC Content: Products shall comply with VOC content limits of authorities having jurisdiction unless otherwise required.

2.2 COLD-APPLIED, EMULSIFIED-ASPHALT DAMPPROOFING

A. Manufacturers: Subject to compliance with requirements, available manufacturers offering products that may be incorporated into the Work include, but are not limited to, the following:

1. BASF Construction Chemicals - Building Systems; Sonneborn Brand Products.

2. Euclid Chemical Company (The); an RPM company
3. Gardner-Gibson, Inc.
4. Henry Company.
5. Koppers Inc.
6. Malarkey Roofing Products.
7. Meadows, W. R., Inc.
8. Sonneborn, Div. of ChemRex, Inc.
9. Tamms Industries.

B. Brush and Spray Coats: ASTM D 1227, Type III, Class 1.

C. VOC Content: 30 g/L or less.

2.3 AUXILIARY MATERIALS

A. General: Furnish auxiliary materials recommended in writing by damp-proofing manufacturer for intended use and compatible with bituminous damp-proofing.

B. Emulsified-Asphalt Primer: ASTM D 1227, Type III, Class 1, except diluted with water as recommended in writing by manufacturer.

C. Patching Compound: Epoxy or latex-modified repair mortar of type recommended in writing by dampproofing manufacturer.

D. Protection Course: Smooth-surfaced roll roofing complying with ASTM D 6380, Class S, Type III.

PART 3 - EXECUTION

3.1 EXAMINATION

A. Examine substrates, areas, and conditions with Applicator present, for compliance with requirements for surface smoothness, surface moisture, and other conditions affecting performance of bituminous damp-proofing work.

B. Proceed with application only after substrate construction and penetrating work have been completed and unsatisfactory conditions have been corrected.

3.2 PREPARATION

A. Mask or otherwise protect adjoining exposed surfaces from being stained, spotted, or coated with damp-proofing. Prevent damp-proofing materials from entering and clogging weep holes and drains.

B. Clean substrates of projections and substances detrimental to the damp-proofing work; fill voids, seal joints, and remove bond breakers if any, as recommended in writing by prime material manufacturer.

3.3 APPLICATION, GENERAL

A. Comply with manufacturer's written instructions for damp-proofing application, cure time between coats, and drying time before backfilling unless more stringent requirements are indicated.

1. Apply damp-proofing to provide continuous plane of protection.
2. Apply additional coats if recommended in writing by manufacturer or to achieve a smooth surface and uninterrupted coverage.

B. Where damp-proofing footings and foundation walls, apply from finished-grade line to top of footing; extend over top of footing and down a minimum of 6 inches (150 mm) over outside face of footing.

1. Extend damp-proofing 12 inches (300 mm) onto intersecting walls and footings, but do not extend onto surfaces exposed to view when Project is completed.

C. Where damp-proofing exterior face of inner wythe of exterior masonry cavity walls, lap damp-proofing at least 1/4 inch (6 mm) onto flashing, masonry reinforcement, veneer ties, and other items that penetrate inner wythe.

1. Extend damp-proofing over outer face of structural members and concrete slabs that interrupt inner wythe.
2. Lap damp-proofing at least 1/4 inch (6 mm) onto shelf angles supporting veneer.

D. Where damp-proofing interior face of above-grade, exterior concrete walls, continue damp-proofing through intersecting walls by keeping vertical mortar joints at intersection temporarily open or by damp-proofing wall before constructing intersecting walls.

3.4 COLD-APPLIED, EMULSIFIED-ASPHALT DAMPPROOFING

A. Concrete Foundations: Apply two brush or spray coats at not less than 1.5 gal./100 sq. ft. (0.6 L/sq. m) for first coat and 1 gal./100 sq. ft. (0.4 L/sq. m) for second coat.

3.5 INSTALLATION OF PROTECTION COURSE

A. Where indicated, install protection course over completed-and-cured damp-proofing. Comply with damp-proofing-material and protection-course manufacturers' written instructions for attaching protection course.

3.6 CLEANING

A. Clean spillage and soiling from adjacent construction using cleaning agents and procedures recommended in writing by manufacturer of affected construction.

END OF SECTION 07 1113

SECTION 071326 - SELF-ADHERING SHEET WATERPROOFING

PART 1 - GENERAL

1.1 RELATED DOCUMENTS

A. Drawings and general provisions of the Contract, including General and Supplementary Conditions and Division 01 Specification Sections, apply to this Section.

1.2 SUMMARY

A. This Section includes the following:
1. Modified bituminous sheet waterproofing, fabric reinforced.

B. Related Sections include the following:
1. Division 07 Section "Joint Sealants" for joint-sealant materials and installation.
2. Division 07 Section “Thermal Insulation” for subgrade wall insulation.
3. Division 33 Section “Subdrainage” for wall drainage mats.

1.3 SUBMITTALS

A. Product Data: Include manufacturer's written instructions for evaluating, preparing, and treating substrate, technical data, and tested physical and performance properties of waterproofing.

B. Samples: For the following products:
1. 12-by-12-inch square of waterproofing and flashing sheet.

C. Installer Certificates: Signed by manufacturers certifying that installers comply with requirements.

D. Qualification Data: For Installer.

E. Product Test Reports: Based on evaluation of comprehensive tests performed by a qualified testing agency, for waterproofing.

1.4 QUALITY ASSURANCE

A. Installer Qualifications: A firm that is approved or licensed by waterproofing manufacturer for installation of waterproofing required for this Project.

B. Source Limitations: Obtain waterproofing materials through one source from a single manufacturer.

1.5 DELIVERY, STORAGE, AND HANDLING

A. Deliver liquid materials to Project site in original packages with seals unbroken, labeled with manufacturer's name, product brand name and type, date of manufacture, and directions for storing and mixing with other components.

B. Store liquid materials in their original undamaged packages in a clean, dry, protected location and within temperature range required by waterproofing manufacturer.

C. Remove and replace liquid materials that cannot be applied within their stated shelf life.

D. Store rolls according to manufacturer's written instructions.

E. Protect stored materials from direct sunlight.

1.6 PROJECT CONDITIONS

A. Environmental Limitations: Apply waterproofing within the range of ambient and substrate temperatures recommended by waterproofing manufacturer. Do not apply waterproofing to a damp or wet substrate.
1. Do not apply waterproofing in snow, rain, fog, or mist.

B. Maintain adequate ventilation during preparation and application of waterproofing materials.

1.7 WARRANTY

A. Special Manufacturer's Warranty: Manufacturer's standard form in which manufacturer agrees to replace waterproofing material that does not comply with requirements or that fails to remain watertight within specified warranty period.
1. Warranty does not include failure of waterproofing due to failure of substrate prepared and treated according to requirements or formation of new joints and cracks in substrate exceeding 1/16 inch in width.
2. Warranty Period: Five years from date of Substantial Completion.

B. Special Installer's Warranty: Written Waterproofing Installer’s warranty signed by Installer, covering Work of this Section, for warranty period of two years.
1. Warranty includes removing and reinstalling protection board, drainage panels, and insulation.

PART 2 - PRODUCTS

2.1 RUBBERIZED-ASPHALT SHEET WATERPROOFING (for subgrade foundation walls)

A. Rubberized-Asphalt Sheet: 60-mil- (1.5-mm-) thick, self-adhering sheet consisting of 56 mils (1.4 mm) of rubberized asphalt laminated to a 4-mil- (0.10-mm-) thick, polyethylene film with release liner on adhesive side, and formulated for application with primer or surface conditioner that complies with VOC limits of authorities having jurisdiction.
1. Physical Properties: As follows, measured per standard test methods referenced:
a. Tensile Strength: 325 psi minimum; ASTM D 412, Die C, modified.
b. Ultimate Elongation: 300 percent minimum; ASTM D 412, Die C, modified.
c. Low-Temperature Flexibility: Pass at minus 20 deg F (minus 29 deg C); ASTM D 1970.
d. Crack Cycling: Unaffected after 100 cycles of 1/8-inch (3-mm) movement; ASTM C 836.
e. Puncture Resistance: 50 lbf minimum; ASTM E 154.
f. Hydrostatic-Head Resistance: 200 feet minimum; ASTM D 5385.
g. Water Absorption: 0.1 percent weight-gain maximum after 48-hour immersion at 70 deg F (21 deg C); ASTM D 570.
h. Vapor Permeance: 0.05 perms (2.9 ng/Pa x s x sq. m); ASTM E 96, Water Method.
2. Available Products: Subject to compliance with requirements, products that may be incorporated into the Work include, but are not limited to, the following; or approved equal:
a. Grace Construction Products; Bituthene 3000

2.2 AUXILIARY MATERIALS

A. General: Furnish auxiliary materials recommended by waterproofing manufacturer for intended use and compatible with sheet waterproofing.
   1. Furnish liquid-type auxiliary materials that comply with VOC limits of authorities having jurisdiction.

B. Primer: Liquid waterborne primer recommended for substrate by manufacturer of sheet waterproofing material.

C. Surface Conditioner: Liquid, waterborne surface conditioner recommended for substrate by manufacturer of sheet waterproofing material.

D. Liquid Membrane: Elastomeric, two-component liquid, cold fluid applied, trowel grade or low viscosity.

E. Substrate Patching Membrane: Low-viscosity, two-component, asphalt-modified coating.

F. Sheet Strips: Self-adhering, rubberized-asphalt sheet strips of same material and thickness as sheet waterproofing.

G. Mastic, Adhesives, and Tape: Liquid mastic and adhesives, and adhesive tapes recommended by waterproofing manufacturer.

PART 3 - EXECUTION

3.1 EXAMINATION

A. Examine substrates, areas, and conditions, with Installer present, for compliance with requirements and other conditions affecting performance.
   1. Verify that concrete has cured and aged for minimum time period recommended by waterproofing manufacturer.
   2. Verify that concrete is visibly dry and free of moisture. Test for capillary moisture by plastic sheet method according to ASTM D 4263.
   3. Proceed with installation only after unsatisfactory conditions have been corrected.

3.2 SURFACE PREPARATION

A. Clean, prepare, and treat substrates according to manufacturer's written instructions. Provide clean, dust-free, and dry substrates for waterproofing application.

B. Mask off adjoining surfaces not receiving waterproofing to prevent spillage and overspray affecting other construction.

C. Remove grease, oil, bitumen, form-release agents, paints, curing compounds, and other penetrating contaminants or film-forming coatings from concrete.

D. Remove fins, ridges, mortar, and other projections and fill honeycomb, aggregate pockets, holes, and other voids.

3.3 RUBBERIZED-ASPHALT SHEET APPLICATION

A. Install self-adhering sheets according to waterproofing manufacturer's written instructions and recommendations in ASTM D 6135.

B. Apply primer to substrates at required rate and allow to dry. Limit priming to areas that will be covered by sheet waterproofing in same day. Reprime areas exposed for more than 24 hours.

C. Apply and firmly adhere sheets over area to receive waterproofing. Accurately align sheets and maintain uniform 2-1/2-inch- (64-mm-) minimum lap widths and end laps. Overlap and seal seams and stagger end laps to ensure watertight installation.
   1. When ambient and substrate temperatures range between 25 and 40 deg F (minus 4 and plus 5 deg C), install self-adhering, rubberized-asphalt sheets produced for low-temperature application. Do not use low-temperature sheets if ambient or substrate temperature is higher than 60 deg F (16 deg C).

D. Horizontal Application: Apply sheets from low point to high point of decks to ensure that side laps shed water.

E. Apply continuous sheets over sheet strips bridging substrate cracks, construction, and contraction joints.

F. Seal exposed edges of sheets at terminations not concealed by metal counterflashings or ending in reglets with mastic or sealant.

G. Install sheet waterproofing and auxiliary materials to tie into adjacent waterproofing.

H. Repair tears, voids, and lapped seams in waterproofing not complying with requirements. Slit and flatten fishmouths and blisters. Patch with sheets extending 6 inches (150 mm) beyond repaired areas in all directions.

I. Correct deficiencies in or remove sheet waterproofing that does not comply with requirements, repair substrates, reapply waterproofing, and repair sheet flashings.

3.4 INSULATION INSTALLATION

A. Install insulation drainage panels over waterproofed surfaces. Cut and fit to within 3/4 inch of projections and penetrations.

B. On vertical surfaces, set insulation units in adhesive or tape applied according to manufacturer's written instructions.

C. On horizontal surfaces, loosely lay insulation units according to manufacturer's written instructions. Stagger end joints and tightly abut insulation units.

3.5 PROTECTION AND CLEANING

A. Do not permit foot or vehicular traffic on unprotected membrane.

B. Protect waterproofing from damage and wear during remainder of construction period.

C. Protect installed insulation drainage panels from damage due to UV light, harmful weather exposures, physical abuse, and other causes. Provide temporary coverings where insulation will be subject to abuse and cannot be concealed and protected by permanent construction immediately after installation.

D. Clean spillage and soiling from adjacent construction using cleaning agents and procedures recommended by manufacturer of affected construction.

END OF SECTION 071326

SECTION 07 2100 - THERMAL INSULATION

PART 1 - GENERAL

1.1 RELATED DOCUMENTS

A. Drawings and general provisions of the Contract, including General and Supplementary Conditions and Division 01 Specification Sections, apply to this Section.

1.2 SUMMARY

A. Section Includes:

1. Perimeter foundation wall insulation (supporting backfill).
2. Cavity-wall insulation.
3. Concealed building insulation.
4. Safing insulation

B. Related Sections: Division 07 Section(s) "Polyvinyl-Chloride (PVC) Roofing" for insulation specified as part of roofing construction.

1. Division 09 Section(s) for installation in wood and metal-framed assemblies of insulation specified by referencing this Section.

1.3 DEFINITIONS

A. Mineral-Fiber Insulation: Insulation composed of rock-wool fibers, slag-wool fibers, or glass fibers; produced in boards and blanket with latter formed into batts (flat-cut lengths) or rolls.

1.4 ACTION SUBMITTALS

A. Product Data: For each type of product indicated.

1.5 INFORMATIONAL SUBMITTALS

A. Product Test Reports: Based on evaluation of comprehensive tests performed by a qualified testing agency, for each product.

1.6 QUALITY ASSURANCE

A. Source Limitations: Obtain each type of building insulation through one source from a single manufacturer.

B. Fire-Test-Response Characteristics: Provide insulation and related materials with the fire-test-response characteristics indicated, as determined by testing identical products per test method indicated below by UL or another testing and inspecting agency acceptable to authorities having

jurisdiction. Identify materials with appropriate markings of applicable testing and inspecting agency.

1. Surface-Burning Characteristics: ASTM E 84.
2. Fire-Resistance Ratings: ASTM E 119.
3. Combustion Characteristics: ASTM E 136.

1.7 DELIVERY, STORAGE, AND HANDLING

A. Protect insulation materials from physical damage and from deterioration due to moisture, soiling, and other sources. Store inside and in a dry location. Comply with manufacturer's written instructions for handling, storing, and protecting during installation.

B. Protect foam-plastic board insulation as follows:

1. Do not expose to sunlight except to necessary extent for period of installation and concealment.
2. Protect against ignition at all times. Do not deliver foam-plastic board materials to Project site before installation time.
3. Quickly complete installation and concealment of foam-plastic board insulation in each area of construction.

PART 2 - PRODUCTS

2.1 FOAM-PLASTIC BOARD INSULATION

A. Extruded-Polystyrene Board Insulation: ASTM C 578, of type and minimum compressive strength indicated below, with maximum flame-spread and smoke-developed indexes of 75 and 450, respectively, per ASTM E 84.

1. Manufacturers: Subject to compliance with requirements, provide products by one of the following:

a. DiversiFoam Products.
b. Dow Chemical Company (The).
c. Owens Corning.
d. Tenneco Building Products.

2. Exterior Foundation Walls and Heated Interior Slab Edges: Type IV, 25 psi (173 kPa).

B. Foil-Faced, Polyisocyanurate Board Insulation: ASTM C 1289, Type I, Class 1, with maximum flame-spread and smoke-developed indexes of 75 and 450, respectively, per ASTM E 84.

1. Manufacturers: Subject to compliance with requirements, [provide products by one of the following] [available manufacturers offering products that may be incorporated into the Work include, but are not limited to, the following]:

a. Atlas Roofing Corporation.
b. Dow Chemical Company (The).
c. Rmax, Inc.
d. Celotex Corporation.
e. GAF Materials Corporation.

2. Cavity Walls.

3. Exterior Framed Walls.

C. Adhesive for Bonding Insulation: Product with demonstrated capability to bond insulation securely to substrates without damaging insulation and substrates.

2.2 GLASS-FIBER BLANKET INSULATION

A. Manufacturers: Subject to compliance with requirements, provide products by one of the following:

1. CertainTeed Corporation.
2. Guardian Building Products, Inc.
3. Johns Manville.
4. Owens Corning.
5. Knauf Fiber Glass.
6. John Manville Corporation.

B. Unfaced, Glass-Fiber Blanket Insulation: ASTM C 665, Type I; with maximum flame-spread and smoke-developed indexes of 25 and 50, respectively, per ASTM E 84; passing ASTM E 136 for combustion characteristics.

C. Sustainability Requirements: Provide glass-fiber blanket insulation as follows:

1. Free of Formaldehyde: Insulation manufactured with 100 percent acrylic binders and no formaldehyde.
2. Low Emitting: Insulation tested according to ASTM D 5116 and shown to emit less than 0.05-ppm formaldehyde.

2.3 SAFING INSULATION

A. Conform to ASTM C612, Class 1 and 2, (melt point of over 2,000 o F.).

B. Manufacturers:
1. Provide USG "Thermafiber Safing Insulation", or equal, thickness as required.

2.4 INSULATION FASTENERS

A. Adhesively Attached, Spindle-Type Anchors: Plate welded to projecting spindle; capable of holding insulation of specified thickness securely in position indicated with self-locking washer in place.

1. Products: Subject to compliance with requirements, provide one of the following:

a. AGM Industries, Inc.; Series T TACTOO Insul-Hangers.
b. Gemco; Spindle Type.

2. Plate: Perforated, galvanized carbon-steel sheet, 0.030 inch (0.762 mm) thick by 2 inches (50 mm) square.

3. Spindle: Copper-coated, low-carbon steel; fully annealed; 0.105 inch (2.67 mm) in diameter; length to suit depth of insulation indicated.

B. Anchor Adhesive: Product with demonstrated capability to bond insulation anchors securely to substrates indicated without damaging insulation, fasteners, and substrates.

1. Products: Subject to compliance with requirements, provide one of the following:

a. AGM Industries, Inc.; TACTOO Adhesive.
b. Gemco; Tuff Bond Hanger Adhesive.

PART 3 - EXECUTION

3.1 INSTALLATION, GENERAL

A. Comply with insulation manufacturer's written instructions applicable to products and applications indicated.

B. Install insulation that is undamaged, dry, and unsoiled and that has not been left exposed to ice, rain, or snow at any time.

C. Extend insulation to envelop entire area to be insulated. Cut and fit tightly around obstructions and fill voids with insulation. Remove projections that interfere with placement.

D. Provide sizes to fit applications indicated and selected from manufacturer's standard thicknesses, widths, and lengths. Apply single layer of insulation units to produce thickness indicated unless multiple layers are otherwise shown or required to make up total thickness.

3.2 INSTALLATION OF BELOW-GRADE INSULATION

A. On vertical footing and foundation wall surfaces, set insulation units using manufacturer's recommended adhesive according to manufacturer's written instructions.

1. If not otherwise indicated, extend insulation a minimum of 36 inches (915 mm) below exterior grade line.

3.3 INSTALLATION OF CAVITY-WALL INSULATION

A. Foam-Plastic Board Insulation: Install pads of adhesive spaced approximately 24 inches (610 mm) o.c. both ways on inside face, and as recommended by manufacturer. Fit courses of insulation between wall ties and other obstructions, with edges butted tightly in both directions. Press units firmly against inside substrates.

1. Supplement adhesive attachment of insulation by securing boards with two-piece wall ties designed for this purpose and specified in Division 04 Section "Unit Masonry."

B. Coordinate installation of cavity wall insulation with Division 07 section titled “Metal Wall and Soffit Panels”.

1. Coordinate installation of cavity wall insulation with Division 7 Section “Metal Wall Panels”.

3.4 INSTALLATION OF INSULATION FOR FRAMED CONSTRUCTION

A. Apply insulation units to substrates by method indicated, complying with manufacturer's written instructions. If no specific method is indicated, bond units to substrate with adhesive or use mechanical anchorage to provide permanent placement and support of units.

B. Foam-Plastic Board Insulation: Seal joints between units by applying adhesive, mastic, or sealant to edges of each unit to form a tight seal as units are shoved into place. Fill voids in completed installation with adhesive, mastic, or sealant as recommended by insulation manufacturer.

1. Coordinate installation of cavity wall insulation with Division 7 Section “Metal Wall Panels”.

C. Glass-Fiber or Mineral-Wool Blanket Insulation: Install in cavities formed by framing members according to the following requirements:

1. Use insulation widths and lengths that fill the cavities formed by framing members. If more than one length is required to fill the cavities, provide lengths that will produce a snug fit between ends.
2. Place insulation in cavities formed by framing members to produce a friction fit between edges of insulation and adjoining framing members.
3. Maintain 3-inch (76-mm) clearance of insulation around recessed lighting fixtures not rated for or protected from contact with insulation.
4. For metal-framed wall cavities where cavity heights exceed 96 inches (2438 mm), support unfaced blankets mechanically and support faced blankets by taping flanges of insulation to flanges of metal studs.

3.5 PROTECTION

A. Protect installed insulation from damage due to harmful weather exposures, physical abuse, and other causes. Provide temporary coverings or enclosures where insulation is subject to abuse and cannot be concealed and protected by permanent construction immediately after installation.

END OF SECTION 07 2100

SECTION 07 2726 - FLUID-APPLIED MEMBRANE AIR BARRIERS

PART 1 - GENERAL

1.1 RELATED DOCUMENTS

A. Drawings and general provisions of the Contract, including General and Supplementary Conditions and Division 01 Specification Sections, apply to this Section.

1.2 SUMMARY

A. This Section includes the following:

1. Fluid-applied membrane air barrier, vapor retarding.

B. Related Sections include the following:

1. Division 04 Section "Unit Masonry" for embedded flashings.
2. Division 06 Section "Sheathing" for wall sheathings, wall sheathing joint-and-penetration treatments, building paper, and building wraps.
3. Division 07 Section "Thermal Insulation" for foam-plastic board insulation.
4. Division 07 Section "Sheet Metal Flashing and Trim" for sheet metal flashings.
5. Division 07 Section "Joint Sealants" for joint-sealant materials and installation.

1.3 DEFINITIONS

A. Air Barrier Assembly: The collection of air barrier materials and auxiliary materials applied to an opaque wall, including joints and junctions to abutting construction, to control air movement through the wall.

1.4 PERFORMANCE REQUIREMENTS

A. General: Air barrier shall be capable of performing as a continuous vapor-retarding air barrier and as a liquid-water drainage plane flashed to discharge to the exterior incidental condensation or water penetration. Air barrier assemblies shall be capable of accommodating substrate movement and of sealing substrate expansion and control joints, construction material changes, and transitions at perimeter conditions without deterioration and air leakage exceeding specified limits.

B. Air-Barrier Assembly Air Leakage at office areas: Maximum 0.25 cfm/sq. ft. of surface area at a pressure differential of 0.3 in. wag (75 Pa), as tested in accordance with ASTM E-779, Standard Test Method for Determining Air Leakage Rate by Fan Pressurization..

C. Air-Barrier Assembly Air Leakage at work bay and warehouse areas: Maximum 0.75 cfm/sq. ft. of surface area at a pressure differential of 0.3 in. wag (75 Pa), as tested in accordance with ASTM E-779, Standard Test Method for Determining Air Leakage Rate by Fan Pressurization..

1.5 ACTION SUBMITTALS

A. Product Data: Include manufacturer's written instructions for evaluating, preparing, and treating substrate; technical data; and tested physical and performance properties of air barrier.

B. Shop Drawings: Show locations and extent of air barrier. Include details for substrate joints and cracks, counterflashing strip, penetrations, inside and outside corners, terminations, and tie-ins with adjoining construction.

1. Include details of interfaces with other materials that form part of air barrier.
2. Include details of mockups.

C. Product Certificates: For air barriers, certifying compatibility of air barrier and accessory materials with Project materials that connect to or that come in contact with the barrier; signed by product manufacturer.

D. Product Test Reports: Based on evaluation of comprehensive tests performed by a qualified testing agency, for air barriers.

1.6 QUALITY ASSURANCE

A. Mockups: Before beginning installation of air barrier, build mockups of exterior wall assembly, incorporating backup wall construction, external cladding, window, door frame and sill, insulation, and flashing to demonstrate surface preparation, crack and joint treatment, and sealing of gaps, terminations, and penetrations of air barrier membrane.

1. Coordinate construction of mockup to permit inspection by Contractor’s testing agency of air barrier before external insulation and cladding is installed.
2. If Architect determines mockups do not comply with requirements, reconstruct mockups and apply air barrier until mockups are approved.
3. Approved mockups may become part of the completed Work if undisturbed at time of Substantial Completion.

B. Preinstallation Conference: Conduct conference at Project site.

1. Include installers of other construction connecting to air barrier, including roofing, waterproofing, architectural precast concrete, masonry, sealants, windows, glazed curtain walls, and door frames.
2. Review air barrier requirements including surface preparation, substrate condition and pretreatment, minimum substrate curing period, forecasted weather conditions, special details and sheet flashings, mockups, installation procedures, sequence of installation, testing and inspecting procedures, and protection and repairs.

1.7 DELIVERY, STORAGE, AND HANDLING

A. Store liquid materials in their original undamaged packages in a clean, dry, protected location and within temperature range required by air barrier manufacturer.

B. Remove and replace liquid materials that cannot be applied within their stated shelf life.

C. Store rolls according to manufacturer's written instructions.

D. Protect stored materials from direct sunlight.

1.8 PROJECT CONDITIONS

A. Environmental Limitations: Apply air barrier within the range of ambient and substrate temperatures recommended by air barrier manufacturer. Protect substrates from environmental conditions that affect performance of air barrier. Do not apply air barrier to a damp or wet substrate or during snow, rain, fog, or mist.

PART 2 - PRODUCTS

2.1 FLUID-APPLIED MEMBRANE AIR BARRIER

A. Fluid-Applied, Vapor-Retarding Membrane Air Barrier: synthetic polymer membrane.

1. Products: Subject to compliance with requirements, provide one of the following:

a. Synthetic Polymer Membrane:

1) Grace, W. R. & Co.; Perm-A-Barrier Liquid.
2) Henry Company; Air-Bloc 32.
3) Rubber Polymer Corporation; Rub-R-Wall Airtight.

2. Physical and Performance Properties:

a. Membrane Air Permeance: Not to exceed 0.004 cfm x sq. ft. of surface area at 1.57-lbf/sq. ft. (0.02 L/s x sq. m of surface area at 75-Pa) pressure difference; ASTM E 2178.
b. Membrane Vapor Permeance: Not to exceed 0.1 perm (5.8 ng/Pa x s x sq. m); ASTM E 96.

2.2 AUXILIARY MATERIALS

A. General: Auxiliary materials recommended by air barrier manufacturer for intended use and compatible with air barrier membrane. Liquid-type auxiliary materials shall comply with VOC limits of authorities having jurisdiction.

B. Primer: Liquid waterborne primer recommended for substrate by manufacturer of air barrier material.

C. Modified Bituminous Strip: Vapor-retarding, 40-mil- (1.0-mm-) thick, smooth-surfaced, self-adhering; consisting of 36 mils (0.9 mm) of rubberized asphalt laminated to a 4-mil- (0.1-mm-) thick polyethylene film with release liner backing.

D. Joint Reinforcing Strip: Air barrier manufacturer's glass-fiber-mesh tape.

E. Substrate Patching Membrane: Manufacturer's standard trowel-grade substrate filler.

F. Adhesive and Tape: Air barrier manufacturer's standard adhesive and pressure-sensitive adhesive tape.

G. Sprayed Polyurethane Foam Sealant: 1- or 2-component, foamed-in-place, polyurethane foam sealant, 1.5 to 2.0 lb/cu. ft (24 to 32 kg/cu. m) density; Class-A rating flame spread index of 25 or less according to ASTM E 162 and NFPA 286 tested for exposed use in non-fire-resistant

rated roof/wall junctures; with primer and noncorrosive substrate cleaner recommended by foam sealant manufacturer.

H. Modified Bituminous Transition Strip: Vapor-retarding, 40-mil- (1.0-mm-) thick, smooth-surfaced, self-adhering; consisting of 36 mils (0.9 mm) of rubberized asphalt laminated to a 4-mil- (0.1-mm-) thick polyethylene film with release liner backing.

I. Joint Sealant: ASTM C 920, single-component, neutral-curing silicone; Class 100/50 (low-modulus), Grade NS, Use NT related to exposure, and, as applicable to joint substrates indicated, Use O. Comply with Division 07 Section "Joint Sealants."

PART 3 - EXECUTION

3.1 EXAMINATION

A. Examine substrates, areas, and conditions, with Installer present, for compliance with requirements and other conditions affecting performance.

1. Verify that substrates are sound and free of oil, grease, dirt, excess mortar, or other contaminants.
2. Verify that concrete has cured and aged for minimum time period recommended by air barrier manufacturer.
3. Verify that concrete is visibly dry and free of moisture. Test for capillary moisture by plastic sheet method according to ASTM D 4263.
4. Verify that masonry joints are flush and completely filled with mortar.
5. Proceed with installation only after unsatisfactory conditions have been corrected.

3.2 SURFACE PREPARATION

A. Clean, prepare, treat, and seal substrate according to manufacturer's written instructions. Provide clean, dust-free, and dry substrate for air barrier application.

B. Mask off adjoining surfaces not covered by air barrier to prevent spillage and overspray affecting other construction.

C. Remove grease, oil, bitumen, form-release agents, paints, curing compounds, and other penetrating contaminants or film-forming coatings from concrete.

D. Remove fins, ridges, mortar, and other projections and fill honeycomb, aggregate pockets, holes, and other voids in concrete with substrate patching membrane.

E. Remove excess mortar from masonry ties, shelf angles, and other obstructions.

F. At changes in substrate plane, apply sealant or termination mastic beads at sharp corners and edges to form a smooth transition from one plane to another.

3.3 JOINT TREATMENT

A. Concrete and Masonry: Prepare, treat, rout, and fill joints and cracks in substrate according to ASTM C 1193 and air barrier manufacturer's written instructions. Remove dust and dirt from joints and cracks complying with ASTM D 4258 before coating surfaces.

1. Prime substrate and apply a single thickness of preparation coat strip extending a minimum of 3 inches (75 mm) along each side of joints and cracks. Apply a double thickness of air barrier membrane and embed a joint reinforcing strip in preparation coat.

B. Wall Sheathing: Fill joints greater than 1/4 inch (6 mm) with sealant according to ASTM C 1193 and with air barrier manufacturer's written instructions. Apply first layer of fluid air barrier membrane at joints. Tape joints with joint reinforcing strip after first layer is dry. Apply a second layer of fluid air barrier membrane over joint reinforcing strip.

3.4 TRANSITION STRIP INSTALLATION

A. Install strips, transition strips, and auxiliary materials according to air barrier manufacturer's written instructions to form a seal with adjacent construction and maintain a continuous air barrier.

1. Coordinate the installation of air barrier with installation of roofing membrane and base flashing to ensure continuity of air barrier with roofing membrane.
2. Install modified bituminous strip on roofing membrane or base flashing so that a minimum of 3 inches (75 mm) of coverage is achieved over both substrates.

B. Apply primer to substrates at required rate and allow to dry. Limit priming to areas that will be covered by air barrier sheet in same day. Reprime areas exposed for more than 24 hours.

1. Prime glass-fiber-surfaced gypsum sheathing with number of prime coats needed to achieve required bond, with adequate drying time between coats.

C. Connect and seal exterior wall air barrier membrane continuously to roofing membrane air barrier, concrete below-grade structures, floor-to floor construction, exterior glazing and window systems, glazed curtain-wall systems, storefront systems, exterior louvers, exterior door framing, and other construction used in exterior wall openings, using accessory materials as indicated.

D. At end of each working day, seal top edge of strips and transition strips to substrate with termination mastic.

E. Apply joint sealants forming part of air barrier assembly within manufacturer's recommended application temperature ranges. Consult manufacturer when sealant cannot be applied within these temperature ranges.

F. Wall Openings: Prime concealed perimeter frame surfaces of windows, curtain walls, storefronts, and doors. Apply modified bituminous transition strip so that a minimum of 3 inches (75 mm) of coverage is achieved over both substrates. Maintain 3 inches (75 mm) of full contact over firm bearing to perimeter frames with not less than 1 inch (25 mm) of full contact.

1. Modified Bituminous Transition Strip: Roll firmly to enhance adhesion.

G. Fill gaps in perimeter frame surfaces of windows, curtain walls, storefronts, and doors, and miscellaneous penetrations of air barrier membrane with foam sealant. Fill gaps between steel roof deck and top of CMU masonry or steel framed exterior walls with foam sealant. Trim excess foam sealant where extruded beyond gap infills.

H. Seal strips and transition strips around masonry reinforcing or ties and penetrations with termination mastic.

I. Seal top of through-wall flashings to air barrier with an additional 6-inch- (150-mm-) wide, modified bituminous strip.

J. Seal exposed edges of strips at seams, cuts, penetrations, and terminations not concealed by metal counterflashings or ending in reglets with termination mastic.

K. Repair punctures, voids, and deficient lapped seams in strips and transition strips. Slit and flatten fishmouths and blisters. Patch with transition strips extending 6 inches (150 mm) beyond repaired areas in strip direction.

3.5 AIR BARRIER MEMBRANE INSTALLATION

A. Apply air barrier membrane to form a seal with strips and transition strips and to achieve a continuous air barrier according to air barrier manufacturer's written instructions.

B. Apply air barrier membrane within manufacturer's recommended application temperature ranges.

C. Apply primer to substrates at required rate and allow to dry. Limit priming to areas that will be covered by air barrier sheet in same day. Reprime areas exposed for more than 24 hours.

1. Prime glass-fiber-surfaced gypsum sheathing with number of prime coats needed to achieve required bond, with adequate drying time between coats.

D. Apply a continuous unbroken air barrier to substrates according to the following minimum thickness. Apply membrane in full contact around protrusions such as masonry ties.

1. Vapor-Retarding Membrane Air Barrier: 60-mil (1.5-mm)] dry film thickness.

E. Apply strip and transition strip over cured air membrane overlapping 3 inches (75 mm) onto each surface according to air barrier manufacturer's written instructions.

F. Do not cover air barrier until it has been tested and inspected by the Contractor’s testing agency.

G. Correct deficiencies in or remove air barrier that does not comply with requirements; repair substrates and reapply air barrier components.

3.6 FIELD QUALITY CONTROL

A. Testing Agency: Contractor will engage a qualified testing agency to perform tests and inspections and prepare test reports.

B. Inspections: Air barrier materials and installation are subject to inspection for compliance with requirements. Inspections may include the following:

1. Continuity of air barrier system has been achieved throughout the building envelope with no gaps or holes.
2. Continuous structural support of air barrier system has been provided.
3. Masonry and concrete surfaces are smooth, clean and free of cavities, protrusions, and mortar droppings.
4. Site conditions for application temperature and dryness of substrates have been maintained.

5. Maximum exposure time of materials to UV deterioration has not been exceeded.
6. Surfaces have been primed, if applicable.
7. Laps in strips and transition strips have complied with minimum requirements and have been shingled in the correct direction (or mastic has been applied on exposed edges), with no fishmouths.
8. Termination mastic has been applied on cut edges.
9. Strips and transition strips have been firmly adhered to substrate.
10. Compatible materials have been used.
11. Transitions at changes in direction and structural support at gaps have been provided.
12. Connections between assemblies (membrane and sealants) have complied with requirements for cleanliness, preparation and priming of surfaces, structural support, integrity, and continuity of seal.
13. All penetrations have been sealed.

C. Tests: Testing to be performed include but are not limited to the following tests:

1. Qualitative Testing: Air barrier assemblies will be tested for evidence of air leakage according to ASTM E 1186, smoke pencil with pressurization or depressurization.
2. Comply with the U.S. Army Corps of Engineer's "Air leakage Test Protocol for Measuring Air Leakage in Buildings".

D. Remove and replace deficient air barrier components and retest as specified above.

3.7 CLEANING AND PROTECTION

A. Protect air barrier system from damage during application and remainder of construction period, according to manufacturer's written instructions.
1. Protect air barrier from exposure to UV light and harmful weather exposure as required by manufacturer. Remove and replace air barrier exposed for more than 30 days.
2. Protect air barrier from contact with creosote, uncured coal-tar products, TPO, EPDM, flexible PVC membranes, and sealants not approved by air barrier manufacturer.

B. Clean spills, stains, and soiling from construction that would be exposed in the completed work using cleaning agents and procedures recommended by manufacturer of affected construction.

C. Remove masking materials after installation.

D. END OF SECTION 07 2726

SECTION 07 4213 - METAL WALL AND SOFFIT PANELS

PART 1 - GENERAL

1.1 RELATED DOCUMENTS

A. Drawings and general provisions of the Contract, including General and Supplementary Conditions and Division 01 Specification Sections, apply to this Section.

1.2 SUMMARY

A. Section Includes:

1. Concealed-Fastener Lap-Seam Metal Wall Panel System.
2. Concealed-fastener, lap-seam metal soffit panel system.

B. Related Sections:

1. Division 05 Section "Cold-Formed Metal Framing" for support framing, including studs, and bracing.
2. Division 07 Section "Sheet Metal Flashing and Trim" for flashing and other sheet metal work that is not part of metal wall panel assemblies.

1.3 DEFINITION

A. Metal Wall Panel Assembly: Metal wall panels, attachment system components, miscellaneous metal framing, thermal insulation, and accessories necessary for a complete weathertight wall

B. Metal Soffit Panel Assembly: Metal soffit panels, attachment system components, miscellaneous metal framing, and accessories necessary for a complete weathertight soffit.

1.4 PERFORMANCE REQUIREMENTS

A. General Performance: Metal wall and soffit panel assemblies shall comply with performance requirements without failure due to defective manufacture, fabrication, installation, or other defects in construction.

B. Delegated Design: Design metal wall and soffit panel assemblies, including comprehensive engineering analysis by a qualified professional engineer, using performance requirements and design criteria indicated.

C. Air Infiltration: Air leakage through assembly of not more than 0.06 cfm/sq. ft. (0.3 L/s per sq. m) of wall area when tested according to ASTM E 283 at the following test-pressure difference:

1. Test-Pressure Difference: 1.57 lbf/sq. ft. (75 Pa).

D. Water Penetration under Static Pressure: No water penetration when tested according to ASTM E 331 at the following test-pressure difference:

1. Test-Pressure Difference: 6.24 lbf/sq. ft. (300 Pa)]

E. Water Penetration under Dynamic Pressure: No evidence of water leakage when tested according to AAMA 501.1 under dynamic pressure equal to 20 percent of inward-acting, wind-load design pressure of not less than 6.24 lbf/sq. ft. (300 Pa) and not more than 12 lbf/sq. ft. (575 Pa).

1. Water Leakage: Uncontrolled water infiltrating the system or appearing on system's normally exposed interior surfaces from sources other than condensation. Water controlled by flashing and gutters that is drained back to the exterior and cannot damage adjacent materials or finishes is not water leakage.

F. Structural Performance: Provide metal wall panel assemblies capable of withstanding the effects the following loads and stresses within limits and under conditions indicated, based on testing according to ASTM E 1592:

1. Wind Loads: Determine loads based on the following minimum design wind pressures:

a. Uniform pressure as indicated on Drawings.

2. Deflection Limits: Metal wall panel assemblies shall withstand wind loads with horizontal deflections no greater than 1/240 of the span.

G. Thermal Movements: Allow for thermal movements from ambient and surface temperature changes by preventing buckling, opening of joints, overstressing of components, failure of joint sealants, failure of connections, and other detrimental effects. Base calculations on surface temperatures of materials due to both solar heat gain and nighttime-sky heat loss.

1. Temperature Change (Range): 120 deg F (67 deg C), ambient; 180 deg F (100 deg C), material surfaces.

1.5 ACTION SUBMITTALS

A. Product Data: For each type of product indicated. Include construction details, material descriptions, dimensions of individual components and profiles, and finishes for each type of wall panel and accessory.

B. Shop Drawings: Show fabrication and installation layouts of metal wall panels; details of edge conditions, joints, panel profiles, corners, anchorages, attachment system, trim, flashings, closures, and accessories; and special details. Distinguish between factory-, shop- and field-assembled work.

1. Accessories: Include details of the following items, at a scale of not less than 1-1/2 inches per 12 inches (1:10):

a. Flashing, trim, and extrusions needed for a complete installation.
b. All conditions of installation and anchorage. Details to include connection to backup supports and framing including metal studs, sheathing, z-furring, insulation and masonry.

C. Samples for Initial Selection: For each type of metal wall panel indicated with factory-applied color finishes.

1. Include similar Samples of trim and accessories involving color selection.

D. Delegated-Design Submittal: For metal wall and soffit panel assemblies indicated to comply with performance requirements and design criteria, including analysis data signed and sealed by the qualified professional engineer responsible for their preparation.

1.6 INFORMATIONAL SUBMITTALS

A. Coordination Drawings:

1. Exterior elevations drawn to scale and coordinating penetrations and wall-mounted items. Show the following:

a. Wall panels and referenced end and side joint details adjacent to other materials.
b. Location of end of panel reveal joints.
c. Wall-mounted items including doors, windows, louvers, and lighting fixtures.
d. Openings and Penetrations of wall by pipes and utilities.

2. Exterior soffit reflected plans drawn to scale and coordinating penetrations. Show the following:

a. Soffit panels and attachments.
b. Soffit panel orientation.
c. Suspension system framing.
d. Referenced panel end and side joint details adjacent to other materials.

B. Qualification Data: For Installer.

C. Product Test Reports: Based on evaluation of comprehensive tests performed by a qualified testing agency, for each product.

D. Warranties: Sample of special warranties.

1.7 CLOSEOUT SUBMITTALS

A. Maintenance Data: For metal wall panels to include in maintenance manuals.

1.8 QUALITY ASSURANCE

A. Installer Qualifications: Experience installer with minimum 10 years experience with successfully complete projects of a similar nature and scope.

B. Source Limitations: Obtain each type of metal wall panel from single source from single manufacturer.

C. Pre-installation Conference: Conduct conference at Project site.

1. Meet with Owner, Architect, Owner's insurer if applicable, testing and inspecting agency representative, metal wall panel Installer, metal wall panel manufacturer's representative, structural-support Installer, and installers whose work interfaces with or affects metal wall panels, including installers of doors, windows, and louvers.
2. Review and finalize construction schedule and verify availability of materials, Installer's personnel, equipment, and facilities needed to make progress and avoid delays.

3. Review methods and procedures related to metal wall panel installation, including manufacturer's written instructions.
4. Examine support conditions for compliance with requirements, including alignment between and attachment to structural members.
5. Review flashings, special siding details, wall penetrations, openings, and condition of other construction that will affect metal wall panels.
6. Review governing regulations and requirements for insurance, certificates, and tests and inspections if applicable.
7. Review temporary protection requirements for metal wall panel assembly during and after installation.
8. Review wall panel observation and repair procedures after metal wall panel installation.

1.9 DELIVERY, STORAGE, AND HANDLING

A. Deliver components, sheets, metal wall panels, and other manufactured items so as not to be damaged or deformed. Package metal wall panels for protection during transportation and handling.

B. Unload, store, and erect metal wall panels in a manner to prevent bending, warping, twisting, and surface damage.

C. Stack metal wall panels horizontally on platforms or pallets, covered with suitable weather-tight and ventilated covering. Store metal wall panels to ensure dryness, with positive slope for drainage of water. Do not store metal wall panels in contact with other materials that might cause staining, denting, or other surface damage.

D. Retain strippable protective covering on metal wall panel for period of metal wall panel installation.

1.10 PROJECT CONDITIONS

A. Weather Limitations: Proceed with installation only when existing and forecasted weather conditions permit assembly of metal wall panels to be performed according to manufacturers' written instructions and warranty requirements.

B. Field Measurements: Verify locations of structural members and wall opening dimensions by field measurements before metal wall panel fabrication, and indicate measurements on Shop Drawings.

1.11 COORDINATION

A. Coordinate metal wall panel assemblies with rain drainage work, flashing, trim, and construction of studs, soffits, and other adjoining work to provide a leak-proof, secure, and noncorrosive installation.

1.12 WARRANTY

A. Special Warranty: Manufacturer's standard form in which manufacturer agrees to repair or replace components of metal wall panel assemblies that fail in materials or workmanship within specified warranty period.

1. Failures include, but are not limited to, the following:

a. Structural failures including rupturing, cracking, or puncturing.
b. Deterioration of metals and other materials beyond normal weathering.

2. Warranty Period: Two years from date of Final Completion.

B. Special Warranty on Panel Finishes: Manufacturer's standard form in which manufacturer agrees to repair finish or replace metal wall panels that show evidence of deterioration of factory-applied finishes within specified warranty period.

1. Exposed Panel Finish: Deterioration includes, but is not limited to, the following:

a. Color fading more than 5 Hunter units when tested according to ASTM D 2244.
b. Chalking in excess of a No. 8 rating when tested according to ASTM D 4214.
c. Cracking, checking, peeling, or failure of paint to adhere to bare metal.

2. Finish Warranty Period: 20 years from date of Final Completion.

PART 2 - PRODUCTS

2.1 PANEL MATERIALS

A. Metallic-Coated Steel Sheet: Restricted flatness steel sheet metallic coated by the hot-dip process and pre-painted by the coil-coating process to comply with ASTM A 755/A 755M.

1. Zinc-Coated (Galvanized) Steel Sheet: ASTM A 653/A 653M, G90 (Z275) coating designation; structural quality.

2. Face Sheet: Minimum 0.030 inch/22 gage (0.76 mm) nominal uncoated thickness.
3. Surface: Smooth, flat finish.
4. Exposed Coil-Coated Finish:

a. Mica Fluoropolymer: AAMA 621. 2-coat fluoropolymer finish with suspended mica flakes containing not less than 70 percent PVDF resin by weight in color coat. Prepare, pretreat, and apply coating to exposed metal surfaces to comply with coating and resin manufacturers' written instructions.

b. Color: As selected by Architect from manufacturer’s full range of colors.

5. Concealed Finish: Apply pretreatment and manufacturer's standard white or light-colored acrylic or polyester backer finish consisting of prime coat and wash coat with a minimum total dry film thickness of 0.5 mil (0.013 mm).

B. Panel Sealants:

1. Sealant Tape: Pressure-sensitive, 100 percent solids, gray polyisobutylene compound sealant tape with release-paper backing. Provide permanently elastic, nonsag, nontoxic, nonstaining tape 1/2 inch (13 mm) wide and 1/8 inch (3 mm) thick.
2. Joint Sealant: ASTM C 920; elastomeric polyurethane, polysulfide, or silicone sealant; of type, grade, class, and use classifications required to seal joints in metal wall panels and remain weathertight; and as recommended in writing by metal wall panel manufacturer.
3. Butyl-Rubber-Based, Solvent-Release Sealant: ASTM C 1311.

2.2 FIELD-INSTALLED THERMAL INSULATION

A. Refer to Division 07 Section "Thermal Insulation."

2.3 MISCELLANEOUS METAL FRAMING

A. Miscellaneous Metal Framing, General: ASTM C 645, cold-formed metallic-coated steel sheet, ASTM A 653/A 653M, G90 (Z275) hot-dip galvanized or coating with equivalent corrosion resistance unless otherwise indicated.

B. Base or Sill Angles or Channels: 0.079-inch (2.01-mm) nominal thickness.

C. Z-Shaped Furring: With slotted or nonslotted web, face flange of 1-1/4 inches (32 mm), wall attachment flange of 7/8 inch (22 mm), and depth required to fit insulation and cavity thickness indicated.

1. Nominal Thickness: As required to meet performance requirements.

D. Fasteners for Miscellaneous Metal Framing: Of type, material, size, corrosion resistance, holding power, and other properties required to fasten miscellaneous metal framing members to substrates.

2.4 MISCELLANEOUS MATERIALS

A. Exposed Fasteners: Where concealed fasteners cannot be avoided, provide self-tapping screws, bolts, nuts, self-locking rivets and bolts, end-welded studs, and other suitable fasteners designed to withstand design loads. Provide exposed fasteners with heads matching color of metal wall panels by means of plastic caps or factory-applied coating. Provide EPDM, PVC, or neoprene sealing washers.

2.5 CONCEALED-FASTENER, METAL WALL PANELS

A. General: Provide factory-formed metal wall panels designed to be field assembled by interconnecting side edges of adjacent panels and mechanically attaching through panel to supports using concealed fasteners and factory-applied sealant in side laps. Include accessories required for weathertight installation.

B. Type 1: Horizontal Wall Panel.

C. Listed Wall Panel information:

1. Subject to compliance with requirements, provide products by one of the following:

a. AEP-Span.
b. Berridge Manufacturing Company.
c. CENTRIA Architectural Systems. (Basis of Design)
d. Metecno-Morin.
e. Petersen Aluminum Corporation.

2. Panel Types:

a. Type I: CENTRIA IW Series, IW40A

3. Material: Zinc-coated (galvanized) steel sheet, 0.034-inch (0.86-mm) nominal thickness.

a. Exterior Finish: 2-coat Mica fluoropolymer / Kynar 500
b. Color: As selected by Architect from manufacturer's full range.

4. Panel Coverage:

a. Type 1: 12 inches (305 mm).

5. Panel Heights: per detail.

2.6 METAL SOFFIT PANELS

A. General: Provide factory-formed metal soffit panels designed to be installed by lapping and interconnecting side edges of adjacent panels and mechanically attaching through panel to supports using concealed fasteners and factory-applied sealant in side laps. Include accessories required for weathertight installation.

B. Flush-Profile Metal Soffit Panels: Solid panels formed with vertical panel edges and flat pan between panel edges; with flush joint between panels.

1. Subject to compliance with requirements, provide products by one of the following:

a. AEP-Span.
b. ATAS International, Inc.
c. Berridge
d. CENTRIA. (Basis of Design)
e. Petersen Aluminum Corporation.

2. Panel: CENTRIA IW-10A.

a. Material: Same material, finish, and color as metal wall panels.
b. Face Sheet: Minimum 22 gage (0.76 mm) nominal uncoated thickness.
c. Panel Coverage: 12 inches (305 mm).
d. Panel Height: 1.5 inch (25 mm).
e. Sealant: Where indicated on approved shop drawings.
f. Surface: Smooth, flat finish.

2.7 ACCESSORIES

A. Wall Panel Accessories: Provide components required for a complete metal wall panel assembly including trim, copings, fasciae, mullions, sills, corner units, clips, flashings, sealants, gaskets, fillers, closure strips, and similar items. Match material and finish of metal wall panels, unless otherwise indicated.

1. Closures: Provide closures at eaves and rakes, fabricated of same metal as metal wall panels.
2. Backing Plates: Provide metal backing plates at panel end splices, fabricated from material recommended by manufacturer.
3. Closure Strips: Closed-cell, expanded, cellular, rubber or cross-linked, polyolefin-foam or closed-cell laminated polyethylene; minimum 1-inch- (25-mm-) thick, flexible closure strips; cut or pre-molded to match metal wall panel profile. Provide closure strips where indicated or necessary to ensure weather-tight construction.

B. Formed Flashing: Formed from 0.018-inch (0.46-mm) minimum thickness, zinc-coated (galvanized) steel sheet or aluminum-zinc alloy-coated steel sheet pre-painted with coil coating finish matching wall panels. Provide flashing as required to seal against weather.

C. Extruded Trim and Reveal Joints: Aluminum extrusions to provide finished appearance. Locations include, but are not limited to, bases, drips, sills, jambs, corners, end-walls, framed openings, rakes, fasciae, parapet caps, soffits, reveals, and fillers. Finish flashing and trim with same finish system as adjacent metal wall panels.

1. CENTRIA Architectural Systems; MicroLine Extrusions or comparable product by other panel manufacturers specified.

FABRICATION

D. General: Fabricate and finish metal wall panels and accessories at the factory to greatest extent possible, by manufacturer's standard procedures and processes, as necessary to fulfill indicated performance requirements demonstrated by laboratory testing. Comply with indicated profiles and with dimensional and structural requirements.

E. Fabricate metal wall panels in a manner that eliminates condensation on interior side of panel and with joints between panels designed to form weather-tight seals.

F. Provide panel profile, including major ribs and intermediate stiffening ribs, if any, for full length of panel.

G. Fabricate metal wall panel joints with factory-installed captive gaskets or separator strips that provide a tight seal and prevent metal-to-metal contact, and that will minimize noise from movements within panel assembly.

H. Sheet Metal Accessories: Fabricate flashing and trim to comply with recommendations in SMACNA's "Architectural Sheet Metal Manual" that apply to the design, dimensions, metal, and other characteristics of item indicated.

1. Form exposed sheet metal accessories that are without excessive oil canning, buckling, and tool marks and that are true to line and levels indicated, with exposed edges folded back to form hems.

2. Seams for Aluminum: Fabricate nonmoving seams with flat-lock seams. Form seams and seal with epoxy seam sealer. Rivet joints for additional strength.
3. Seams for Other Than Aluminum: Fabricate nonmoving seams in accessories with flat-lock seams. Tin edges to be seamed, form seams, and solder.
4. Sealed Joints: Form nonexpansion but movable joints in metal to accommodate elastomeric sealant to comply with SMACNA standards.
5. Conceal fasteners and expansion provisions where possible. Exposed fasteners are not allowed on faces of accessories exposed to view.
6. Fabricate cleats and attachment devices from same material as accessory being anchored or from compatible, noncorrosive metal recommended by metal wall panel manufacturer.

    a. Size: As recommended by SMACNA's "Architectural Sheet Metal Manual" or metal wall panel manufacturer for application but not less than thickness of metal being secured.

2.8 GENERAL FINISH REQUIREMENTS

A. Comply with NAAMM's "Metal Finishes Manual for Architectural and Metal Products" for recommendations for applying and designating finishes.

B. Protect mechanical and painted finishes on exposed surfaces from damage by applying a strippable, temporary protective covering before shipping.

C. Appearance of Finished Work: Variations in appearance of abutting or adjacent pieces are acceptable if they are within one-half of the range of approved Samples. Noticeable variations in the same piece are not acceptable. Variations in appearance of other components are acceptable if they are within the range of approved Samples and are assembled or installed to minimize contrast.

PART 3 - EXECUTION

3.1 EXAMINATION

A. Examine substrates, areas, and conditions, with Installer present, for compliance with requirements for installation tolerances, metal wall panel supports, and other conditions affecting performance of work.

1. Examine wall framing to verify that z-furring, angles, channels, studs, and other structural panel support members and anchorage have been installed within alignment tolerances required by metal wall panel manufacturer.
2. Examine wall sheathing to verify that sheathing joints are supported by framing or blocking and that installation is within flatness tolerances required by metal wall panel manufacturer.
3. For the record, prepare written report, endorsed by Installer, listing conditions detrimental to performance of work.

B. Examine roughing-in for components and systems penetrating metal wall panels to verify actual locations of penetrations relative to seam locations of metal wall panels before metal wall panel installation.

C. Proceed with installation only after unsatisfactory conditions have been corrected.

3.2 PREPARATION

A. Miscellaneous Framing: Install subgirts, base angles, sills, furring, and other miscellaneous wall panel support members and anchorages according to ASTM C 754 and metal wall panel manufacturer's written recommendations.

3.3 THERMAL INSULATION INSTALLATION

A. Board Insulation: Extend insulation in thickness indicated to cover entire wall. Comply with installation requirements in Division 07 Section "Thermal Insulation."

1. Erect insulation and hold in place with Z-shaped furring members spaced at maximum 16 inches (610 mm) o.c. Attach furring members to substrate with screws spaced 24 inches (610 mm) o.c.

3.4 METAL WALL PANEL INSTALLATION

A. General: Install metal wall panels according to manufacturer's written instructions in orientation, sizes, and locations indicated on Drawings. Install panels perpendicular to girts and subgirts unless otherwise indicated. Anchor metal wall panels and other components of the Work securely in place, with provisions for thermal and structural movement.

1. Commence metal wall panel installation and install minimum of 300 sq. ft. (27.8 sq. m.) in presence of factory-authorized representative.
2. Shim or otherwise plumb substrates receiving metal wall panels.
3. Flash and seal metal wall panels at perimeter of all openings. Fasten with self-tapping screws. Do not begin installation until weather barrier and flashings that will be concealed by metal wall panels are installed.
4. Install screw fasteners in predrilled holes.
5. Locate and space fastenings in uniform vertical and horizontal alignment.
6. Install flashing and trim as metal wall panel work proceeds.
7. Fasten metal wall panels to supports with concealed clips at each joint at location, spacing and with fasteners recommended by manufacturer. Install clips with self-taping screws.
8. Apply elastomeric sealant continuously between metal base channel (sill angle) and concrete and elsewhere as indicated or, if not indicated, as necessary for waterproofing.
9. Align bottom of metal wall panels and fasten with blind rivets, bolts, or self-tapping screws. Fasten flashings around openings and similar elements with self-tapping screws.
10. Install extruded aluminum trims per manufacturer’s instructions.
11. Provide weather-tight escutcheons for pipe and conduit penetrating exterior walls.

B. Fasteners:

1. Steel Wall Panel Concealed Anchorages: Use stainless-steel fasteners for all surfaces.

C. Metal Protection: Where dissimilar metals will contact each other or corrosive substrates, protect against galvanic action as recommended by metal wall panel manufacturer.

D. Joint Sealers: Install gaskets, joint fillers, and sealants where indicated and where required for weathertight performance of metal wall panel assemblies. Provide types of gaskets, fillers, and sealants indicated or, if not indicated, types recommended by metal wall panel manufacturer.

1. Seal metal wall panel end laps with double beads of tape or sealant, full width of panel. Seal side joints where recommended by metal wall panel manufacturer.
2. Prepare joints and apply sealants to comply with requirements in Division 07 Section "Joint Sealants."

E. Lap-Seam Metal Wall Panels: Fasten metal wall panels to supports with fasteners at each lapped joint at location and spacing recommended by manufacturer.

1. Lap ribbed or fluted sheets one full rib corrugation. Apply panels and associated items for neat and weathertight enclosure. Avoid "panel creep" or application not true to line.
2. Provide metal-backed washers under heads of exposed fasteners bearing on weather side of metal wall panels.
3. Locate and space exposed fasteners in uniform vertical and horizontal alignment. Use proper tools to obtain controlled uniform compression for positive seal without rupture of washer.
4. Install screw fasteners with power tools having controlled torque adjusted to compress washer tightly without damage to washer, screw threads, or panels. Install screws in predrilled holes.
5. Provide sealant tape at lapped joints of metal wall panels and between panels and protruding equipment, vents, and accessories.
6. Apply a continuous ribbon of sealant tape to weather-side surface of fastenings on end laps; on side laps of nesting-type panels; on side laps of corrugated nesting-type, ribbed, or fluted panels; and elsewhere as needed to make panels weather-tight.
7. Provide full length panels without end laps, extending between edge and reveal trims.

3.5 METAL SOFFIT PANEL INSTALLATION

A. In addition to complying with requirements in "Metal Wall Panel Installation, General" Article, install metal soffit panels to comply with requirements in this article.

B. Metal Soffit Panels: Provide metal soffit panels full width of soffits. Install panels perpendicular to support framing.

1. Flash and seal panels with weather closures where metal soffit panels meet walls and at perimeter of all openings.

3.6 ACCESSORY INSTALLATION

A. General: Install accessories with positive anchorage to building and weather-tight mounting, and provide for thermal expansion. Coordinate installation with flashings and other components.

1. Install components required for a complete metal wall panel assembly including trim, copings, corners, seam covers, flashings, sealants, gaskets, fillers, closure strips, and similar items.

B. Flashing and Trim: Comply with performance requirements, manufacturer's written installation instructions, and SMACNA's "Architectural Sheet Metal Manual." Provide concealed fasteners where possible, and set units true to line and level as indicated. Install work with laps, joints, and seams that will be permanently watertight and weather resistant.

1. Install exposed flashing and trim that is without excessive oil canning, buckling, and tool marks and that is true to line and levels indicated, with exposed edges folded back to

form hems. Provide concealed Install sheet metal flashing and trim to fit substrates and to result in waterproof and weather-resistant performance.

2. Install extruded aluminum trims with concealed fasteners per manufacturer's instructions.
3. Expansion Provisions: Provide for thermal expansion of exposed flashing and trim. Space movement joints at a maximum of 10 feet (3 m) with no joints allowed within 24 inches (605 mm) of corner or intersection. Where lapped expansion provisions cannot be used or would not be sufficiently weather resistant and waterproof, form expansion joints of intermeshing hooked flanges, not less than 1 inch (25 mm) deep, filled with mastic sealant (concealed within joints).

3.7 CLEANING AND PROTECTION

A. Remove temporary protective coverings and strippable films, if any, as metal wall panels are installed, unless otherwise indicated in manufacturer's written installation instructions. On completion of metal wall panel installation, clean finished surfaces as recommended by metal wall panel manufacturer. Maintain in a clean condition during construction.

B. After metal wall panel installation, clear weep holes and drainage channels of obstructions, dirt, and sealant.

C. Replace metal wall panels that have been damaged or have deteriorated beyond successful repair by finish touchup or similar minor repair procedures.

END OF SECTION 07 4213

SECTION 074213.23 - METAL COMPOSITE MATERIAL WALL PANELS

PART 1 - GENERAL

1.1 RELATED DOCUMENTS

A. Drawings and general provisions of the Contract, including General and Supplementary Conditions and Division 01 Specification Sections, apply to this Section.

1.2 SUMMARY

A. Section includes metal composite material wall panels.

1.3 PREINSTALLATION MEETINGS

A. Pre-installation Conference: Conduct conference at Project site.

1. Meet with Owner, Architect, Owner's insurer if applicable, metal composite material panel Installer, metal composite material panel manufacturer's representative, structural-support Installer, and installers whose work interfaces with or affects metal composite material panels, including installers of doors, windows, and louvers.
2. Review methods and procedures related to metal composite material panel installation, including manufacturer's written instructions.
3. Examine support conditions for compliance with requirements, including alignment between and attachment to structural members.
4. Review flashings, special siding details, wall penetrations, openings, and condition of other construction that affect metal composite material panels.
5. Review temporary protection requirements for metal composite material panel assembly during and after installation.
6. Review procedures for repair of panels damaged after installation.

1.4 ACTION SUBMITTALS

A. Product Data: For each type of product.

1. Include construction details, material descriptions, dimensions of individual components and profiles, and finishes for each type of panel and accessory.

B. Shop Drawings:

1. Include fabrication and installation layouts of metal composite material panels; details of edge conditions, joints, panel profiles, corners, anchorages, attachment assembly, trim, flashings, closures, and accessories; and special details.
2. Accessories: Include details of the flashing, trim and anchorage, at a scale of not less than 1-1/2 inches per 12 inches1:10.

C. Samples for Initial Selection: For each type of metal composite material panel indicated with factory-applied color finishes.

1. Include similar Samples of trim and accessories involving color selection.

D. Samples for Verification: For each type of exposed finish required, prepared on Samples of size indicated below.

1. Metal Composite Material Panels: 12 inches305 mm long by actual panel width. Include fasteners, closures, and other metal composite material panel accessories.

1.5 INFORMATIONAL SUBMITTALS

A. Qualification Data: For Installer.

B. Product Test Reports: For each product, tests performed by a qualified testing agency.

C. Sample Warranties: For special warranties.

1.6 CLOSEOUT SUBMITTALS

A. Maintenance Data: For metal composite material panels to include in maintenance manuals.

1.7 QUALITY ASSURANCE

A. Installer Qualifications: An entity that employs installers and supervisors who are trained and approved by manufacturer.

B. Mockups: Build mockups to verify selections made under Sample submittals and to demonstrate aesthetic effects and set quality standards for fabrication and installation.

1. Build mockup of typical metal composite material panel assembly , including corner, supports, attachments, and accessories.
2. Approval of mockups does not constitute approval of deviations from the Contract Documents contained in mockups unless Architect specifically approves such deviations in writing.

1.8 DELIVERY, STORAGE, AND HANDLING

A. Deliver components, metal composite material panels, and other manufactured items so as not to be damaged or deformed. Package metal composite material panels for protection during transportation and handling.

B. Unload, store, and erect metal composite material panels in a manner to prevent bending, warping, twisting, and surface damage.

C. Stack metal composite material panels horizontally on platforms or pallets, covered with suitable weathertight and ventilated covering. Store metal composite material panels to ensure dryness, with positive slope for drainage of water. Do not store metal composite material panels in contact with other materials that might cause staining, denting, or other surface damage.

D. Retain strippable protective covering on metal composite material panels during installation.

1.9 FIELD CONDITIONS

A. Weather Limitations: Proceed with installation only when existing and forecasted weather conditions permit assembly of metal composite material panels to be performed according to manufacturers' written instructions and warranty requirements.

1.10 COORDINATION

A. Coordinate metal composite material panel installation with rain drainage work, flashing, trim, construction of soffits, and other adjoining work to provide a leakproof, secure, and noncorrosive installation.

1.11 WARRANTY

A. Special Warranty: Manufacturer's standard form in which manufacturer agrees to repair or replace components of metal composite material panel systems that fail in materials or workmanship within specified warranty period.

1. Failures include, but are not limited to, the following:

a. Structural failures including rupturing, cracking, or puncturing.
b. Deterioration of metals and other materials beyond normal weathering.

2. Warranty Period: Two years from date of Substantial Completion.

B. Special Warranty on Panel Finishes: Manufacturer's standard form in which manufacturer agrees to repair finish or replace metal composite material panels that show evidence of deterioration of factory-applied finishes within specified warranty period.

1. Exposed Panel Finish: Deterioration includes, but is not limited to, the following:

a. Color fading more than 5 Hunter units when tested according to ASTM D 2244.
b. Chalking in excess of a No. 8 rating when tested according to ASTM D 4214.
c. Cracking, checking, peeling, or failure of paint to adhere to bare metal.

2. Finish Warranty Period: 20 years from date of Substantial Completion.

PART 2 - PRODUCTS

2.1 PERFORMANCE REQUIREMENTS

A. Structural Performance: Provide metal composite material panel systems capable of withstanding the effects of the following loads, based on testing according to ASTM E 330:

1. Wind Loads: As indicated on Drawings.
2. Deflection Limits: For wind loads, no greater than 1/180 of the span.

B. Thermal Movements: Allow for thermal movements from ambient and surface temperature changes by preventing buckling, opening of joints, overstressing of components, failure of joint sealants, failure of connections, and other detrimental effects. Base calculations on surface temperatures of materials due to both solar heat gain and nighttime-sky heat loss.

1. Temperature Change (Range): 120 deg F67 deg C, ambient; 180 deg F100 deg C, material surfaces.

2.2 METAL COMPOSITE MATERIAL WALL PANELS - TYPE 2

A. Metal Composite Material Wall Panel Systems: Provide metal composite material wall panels fabricated from two metal facings that are bonded to a solid, extruded thermoplastic core; formed into profile for installation method indicated. Include attachment assembly components, fasteners, and accessories required for weathertight system.

B. Basis-of-Design Manufacturer: Citadel Architectural Products, Inc., Envelope 2000 RV- Battan, aluminum-faced composite wall panels: Formed with 0.024-inch- (0.50-mm-) thick, coil-coated aluminum sheet facings.

1. Panel Thickness: 0.125 inch.3 mm4 mm5 mm6 mm
2. Core: 0.105” thermoset phenolic resin.
3. Exterior Finishes: Two-coat MICA fluoropolymer
4. Base Panel Color: Crystal Finishing Systems, Inc. as selected by architect from full series of colors.

C. Attachment Assembly Trim Components: Formed from extruded aluminum material compatible with panel facing.

2.3 MISCELLANEOUS MATERIALS

A. Miscellaneous Metal Subframing and Furring: ASTM C 645, cold-formed, metallic-coated steel sheet ASTM A 653/A 653M, G90Z275 hot-dip galvanized coating designation or ASTM A 792/A 792M, Class AZ50Class AZM150 aluminum-zinc-alloy coating designation unless otherwise indicated. Provide manufacturer's standard sections as required for support and alignment of metal composite material panel system.

B. Panel Accessories: Provide components required for a complete, weathertight panel system including trim, copings, fasciae, mullions, sills, corner units, clips, flashings, sealants, gaskets, fillers, closure strips, and similar items. Match material and finish of metal composite material panels unless otherwise indicated.

C. Flashing: Provide flashing formed from same material as metal composite material panels as required to seal against weather and to provide finished appearance. Locations include, but are not limited to, bases, drips, parapet caps, and fillers. Finish flashing with same finish system as adjacent metal composite material panels.

D. Panel Fasteners: Self-tapping screws designed to withstand design loads. Provide exposed fasteners with heads matching color of metal composite material panels by means of plastic caps or factory-applied coating. Provide EPDM or PVC sealing washers for exposed fasteners. Fasteners shall be coated or stainless steel.

E. Panel Sealants: ASTM C 920; elastomeric polyurethane or silicone sealant; of type, grade, class, and use classifications required to seal joints in metal composite material panels and remain weathertight; and as recommended in writing by metal composite material panel manufacturer.

2.4 FABRICATION

A. General: Fabricate and finish metal composite material panels and accessories at the factory, by manufacturer's standard procedures and processes, as necessary to fulfill indicated performance requirements demonstrated by laboratory testing. Comply with indicated profiles and with dimensional and structural requirements.

B. Sheet Metal Flashing and Trim: Fabricate flashing and trim to comply with manufacturer's recommendations and recommendations in SMACNA's "Architectural Sheet Metal Manual" that apply to design, dimensions, metal, and other characteristics of item indicated.

1. Form exposed sheet metal accessories that are without excessive oil canning, buckling, and tool marks and that are true to line and levels indicated, with exposed edges folded back to form hems.
2. Seams for Aluminum: Fabricate nonmoving seams with flat-lock seams. Form seams and seal with epoxy seam sealer. Rivet joints for additional strength.
3. Seams for Other Than Aluminum: Fabricate nonmoving seams in accessories with flat-lock seams. Tin edges to be seamed, form seams, and solder.
4. Sealed Joints: Form non-expansion, but movable, joints in metal to accommodate sealant and to comply with SMACNA standards.
5. Conceal fasteners and expansion provisions where possible. Exposed fasteners are not allowed on faces of accessories exposed to view.
6. Fabricate cleats and attachment devices from same material as accessory being anchored or from compatible, noncorrosive metal recommended in writing by metal panel manufacturer.

a. Size: As recommended by SMACNA's "Architectural Sheet Metal Manual" or metal wall panel manufacturer for application but not less than thickness of metal being secured.

2.5 FINISHES

A. Protect mechanical and painted finishes on exposed surfaces from damage by applying a strippable, temporary protective covering before shipping.

B. Appearance of Finished Work: Variations in appearance of abutting or adjacent pieces are acceptable if they are within one-half of the range of approved Samples. Noticeable variations in same piece are not acceptable. Variations in appearance of other components are acceptable if they are within the range of approved Samples and are assembled or installed to minimize contrast.

C. Aluminum Panels and Accessories:

1. Two-Coat MICA Fluoropolymer: AAMA 2605. Fluoropolymer finish containing not less than 70 percent PVDF resin by weight in color coat. Prepare, pretreat, and apply coating to exposed metal surfaces to comply with coating and resin manufacturers' written instructions.

PART 3 - EXECUTION

3.1 EXAMINATION

A. Examine substrates, areas, and conditions, with Installer present, for compliance with requirements for installation tolerances, metal composite material panel supports, and other conditions affecting performance of the Work.

1. Examine wall framing to verify that girts, angles, channels, studs, and other structural panel support members and anchorage have been installed within alignment tolerances required by metal composite material wall panel manufacturer.
2. Examine wall sheathing to verify that sheathing joints are supported by framing or blocking and that installation is within flatness tolerances required by metal composite material wall panel manufacturer.

a. Verify that air-or water-resistive barriers have been installed over sheathing or backing substrate to prevent air infiltration or water penetration.

B. Examine roughing-in for components and assemblies penetrating metal composite material panels to verify actual locations of penetrations relative to seam locations of metal composite material panels before installation.

C. Proceed with installation only after unsatisfactory conditions have been corrected.

3.2 PREPARATION

A. Miscellaneous Supports: Install subframing, furring, and other miscellaneous panel support members and anchorages according to ASTM C 754 and metal composite material panel manufacturer's written recommendations.

3.3 METAL COMPOSITE MATERIAL PANEL INSTALLATION

A. General: Install metal composite material panels according to manufacturer's written instructions in orientation, sizes, and locations indicated on Drawings. Install panels perpendicular to supports unless otherwise indicated. Anchor metal composite material panels and other components of the Work securely in place, with provisions for thermal and structural movement.

1. Shim or otherwise plumb substrates receiving metal composite material panels.
2. Flash and seal metal composite material panels at perimeter of all openings. Fasten with self-tapping screws. Do not begin installation until air- or water-resistive barriers and flashings that will be concealed by metal composite material panels are installed.
3. Install flashing and trim as metal composite material panel work proceeds.
4. Provide weathertight escutcheons for pipe- and conduit-penetrating panels.

B. Attachment Assembly, General: Install attachment assembly required to support metal composite material wall panels and to provide a complete weathertight wall system, including subgirts, perimeter extrusions, tracks, drainage channels, panel clips, and anchor channels.

1. Include attachment to supports, panel-to-panel joinery, panel-to-dissimilar-material joinery, and panel-system joint seals.

C. Installation: Attach metal composite material wall panels to supports at locations, spacings, and with fasteners recommended by manufacturer to achieve performance requirements specified.

1. Wet Seal Systems: Seal horizontal and vertical joints between adjacent metal composite material wall panels with sealant backing and sealant. Install sealant backing and sealant according to manufacturer's standard installation method.

D. Accessory Installation: Install accessories with positive anchorage to building and weathertight mounting, and provide for thermal expansion. Coordinate installation with flashings and other components.

1. Install components required for a complete metal composite material panel assembly including trim, copings, corners, seam covers, flashings, sealants, gaskets, fillers, closure strips, and similar items. Provide types indicated by metal composite material panel manufacturer; or, if not indicated, provide types recommended in writing by metal composite material panel manufacturer.

E. Flashing and Trim: Comply with performance requirements, manufacturer's written installation instructions, and SMACNA's "Architectural Sheet Metal Manual." Provide concealed fasteners where possible, and set units true to line and level as indicated. Install flashing with joints, and seams that are permanently watertight. Install extruded aluminum trims with mitered or butt joints per manufacturer’s instructions.

F. Expansion Provisions: Provide for thermal expansion of exposed flashing and trim. Space movement joints at a maximum of 10 feet with no joints allowed within 24 inches of corner or intersection. Where lapped expansion provisions cannot be used or would not be sufficiently waterproof, form expansion joints of intermeshing hooked flanges, not less than 1 inch deep, filled with mastic sealant (concealed within joints).

3.4 ERECTION TOLERANCES

A. Installation Tolerances: Shim and align metal composite material wall panel units within installed tolerance of 1/4 inch in 20 feet6 mm in 6 m, non-accumulative, on level, plumb, and location lines as indicated, and within 1/8-inch3-mm offset of adjoining faces and of alignment of matching profiles.

3.5 CLEANING AND PROTECTION

A. Remove temporary protective coverings and strippable films, if any, as metal composite material panels are installed, unless otherwise indicated in manufacturer's written installation instructions. On completion of metal composite material panel installation, clean finished surfaces as recommended by metal composite material panel manufacturer. Maintain in a clean condition during construction.

B. After metal composite material panel installation, clear weep holes and drainage channels of obstructions, dirt, and sealant.

C. Replace metal composite material panels that have been damaged or have deteriorated beyond successful repair by finish touchup or similar minor repair procedures.

END OF SECTION 074213.23

SECTION 075423 - THERMOPLASTIC POLYOLEFIN (TPO) ROOFING

PART 1 - GENERAL

1.1 RELATED DOCUMENTS

A. Drawings and general provisions of the Contract, including General and Supplementary Conditions and Division 01 Specification Sections, apply to this Section.

1.2 SUMMARY

A. Section Includes:

1. Adhered TPO membrane roofing system.
2. Roof insulation.

B. Related Sections:

1. Division 06 Section "Rough Carpentry " for wood nailers, curbs, and blocking.
2. Division 07 Section "Preparation for Re-Roofing" for recover board beneath new membrane roofing.
3. Division 07 Section "Sheet Metal Flashing and Trim" for metal roof penetration flashings, flashings, and counterflashings.
4. Division 07 Section "Manufactured Roof Expansion Joints" for proprietary manufactured roof expansion-joint assemblies.
5. Division 07 Section "Joint Sealants" for joint sealants, joint fillers, and joint preparation.

1.3 DEFINITIONS

A. TPO: Thermoplastic polyolefin.

B. Roofing Terminology: See ASTM D 1079 and glossary in NRCA's "The NRCA Roofing and Waterproofing Manual" for definitions of terms related to roofing work in this Section.

1.4 PERFORMANCE REQUIREMENTS

A. General Performance: Installed membrane roofing and base flashings shall withstand specified uplift pressures, thermally induced movement, and exposure to weather without failure due to defective manufacture, fabrication, installation, or other defects in construction. Membrane roofing and base flashings shall remain watertight.

B. Material Compatibility: Provide roofing materials that are compatible with one another under conditions of service and application required, as demonstrated by membrane roofing manufacturer based on testing and field experience.

C. Roofing System Design: Provide membrane roofing system that is identical to systems that have been successfully tested by a qualified testing and inspecting agency to resist uplift pressure calculated according to ASCE/SEI 7.

1. Corner Uplift Pressure: 25psf.
2. Perimeter Uplift Pressure: 20psf.
3. Field-of-Roof Uplift Pressure: 15psf.

D. FM Approvals Listing: Provide membrane roofing, base flashings, and component materials that comply with requirements in FM Approvals 4450 and FM Approvals 4470 as part of a membrane roofing system, and that are listed in FM Approvals' "RoofNav" for Class 1 or non-combustible construction, as applicable. Identify materials with FM Approvals markings.

1. Fire/Windstorm Classification: Class 1A-120.
2. Hail Resistance: SH.

E. Solar Reflectance Index: Not less than 78 when calculated according to ASTM E 1980, based on testing identical products by a qualified testing agency.

F. Energy Performance: Provide roofing system that is listed on the DOE's ENERGY STAR "Roof Products Qualified Product List" for low -slope roof products.

1.5 ACTION SUBMITTALS

A. Product Data: For each type of product indicated.

B. Shop Drawings: For roofing system. Include plans, elevations, sections, details, and attachments to other work.

1. Base flashings and membrane terminations.
2. Tapered insulation, including slopes.
3. Insulation fastening patterns for corner, perimeter, and field-of-roof locations.

1.6 INFORMATIONAL SUBMITTALS

A. Qualification Data: For qualified Installer and manufacturer.

B. Manufacturer Certificates: Signed by roofing manufacturer certifying that roofing system complies with requirements specified in "Performance Requirements" Article.

1. Submit evidence of compliance with performance requirements.

C. Product Test Reports: Based on evaluation of comprehensive tests performed by manufacturer and witnessed by a qualified testing agency, for components of membrane roofing system.

D. Warranties: Sample of special warranties.

1.7 CLOSEOUT SUBMITTALS

A. Maintenance Data: For roofing system to include in maintenance manuals.

1.8 QUALITY ASSURANCE

A. Manufacturer Qualifications: A qualified manufacturer that is UL listed FM Approvals approved for membrane roofing system identical to that used for this Project.

B. Installer Qualifications: A qualified firm that is approved, authorized, or licensed by membrane roofing system manufacturer to install manufacturer's product and that is eligible to receive manufacturer's special warranty.

C. Source Limitations: Obtain components including roof insulation fasteners for membrane roofing system from same manufacturer as membrane roofingor approved by membrane roofing manufacturer.

D. Exterior Fire-Test Exposure: ASTM E 108, Class A; for application and roof slopes indicated, as determined by testing identical membrane roofing materials by a qualified testing agency. Materials shall be identified with appropriate markings of applicable testing agency.

E. Preinstallation Roofing Conference: Conduct conference at [Project site] <Insert location>.

1. Meet with Owner, Architect, Owner's insurer if applicable, testing and inspecting agency representative, roofing Installer, roofing system manufacturer's representative, deck Installer, and installers whose work interfaces with or affects roofing, including installers of roof accessories and roof-mounted equipment.
2. Review methods and procedures related to roofing installation, including manufacturer's written instructions.
3. Review and finalize construction schedule and verify availability of materials, Installer's personnel, equipment, and facilities needed to make progress and avoid delays.
4. Examine deck substrate conditions and finishes for compliance with requirements, including flatness and fastening.
5. Review structural loading limitations of roof deck during and after roofing.
6. Review base flashings, special roofing details, roof drainage, roof penetrations, equipment curbs, and condition of other construction that will affect roofing system.
7. Review governing regulations and requirements for insurance and certificates if applicable.
8. Review temporary protection requirements for roofing system during and after installation.
9. Review roof observation and repair procedures after roofing installation.

1.9 DELIVERY, STORAGE, AND HANDLING

A. Deliver roofing materials to Project site in original containers with seals unbroken and labeled with manufacturer's name, product brand name and type, date of manufacture, approval or listing agency markings, and directions for storing and mixing with other components.

B. Store liquid materials in their original undamaged containers in a clean, dry, protected location and within the temperature range required by roofing system manufacturer. Protect stored liquid material from direct sunlight.

1. Discard and legally dispose of liquid material that cannot be applied within its stated shelf life.

C. Protect roof insulation materials from physical damage and from deterioration by sunlight, moisture, soiling, and other sources. Store in a dry location. Comply with insulation manufacturer's written instructions for handling, storing, and protecting during installation.

D. Handle and store roofing materials and place equipment in a manner to avoid permanent deflection of deck.

1.10 PROJECT CONDITIONS

A. Weather Limitations: Proceed with installation only when existing and forecasted weather conditions permit roofing system to be installed according to manufacturer's written instructions and warranty requirements.

1.11 WARRANTY

A. Special Warranty: Manufacturer's standard or customized form, without monetary limitation, in which manufacturer agrees to repair or replace components of membrane roofing system that fail in materials or workmanship within specified warranty period.

1. Special warranty includes membrane roofing, base flashings, roof insulation, cover boards, and other components of membrane roofing system.
2. Warranty Period: 20r years from date of Substantial Completion.

B. Special Project Warranty: Submit roofing Installer's warranty, , signed by Installer, covering the Work of this Section, including all components of membrane roofing system such as membrane roofing, base flashing, roof insulation, fasteners, cover boards,, and walkway products, for the following warranty period:

1. Warranty Period: Two years from date of Substantial Completion.

PART 2 - PRODUCTS

2.1 TPO MEMBRANE ROOFING

A. Fabric-Reinforced Thermoplastic Polyolefin Sheet: ASTM D 6878, internally fabric or scrim reinforced, uniform, flexible fabric backed TPO sheet.

1. Manufacturers: Subject to compliance with requirements, available manufacturers offering products that may be incorporated into the Work include, but are not limited to, the following:

a. Carlisle SynTec Incorporated.
b. Firestone Building Products Company.
c. GAF Materials Corporation.
d. GenFlex Roofing Systems.

2. Thickness: 60 mils1.5 mm, nominal.
3. Exposed Face Color: White.

2.2 AUXILIARY MEMBRANE ROOFING MATERIALS

A. General: Auxiliary membrane roofing materials recommended by roofing system manufacturer for intended use, and compatible with membrane roofing.

1. Liquid-type auxiliary materials shall comply with VOC limits of authorities having jurisdiction.

B. Miscellaneous Accessories: Provide pourable sealers, preformed cone and vent sheet flash-

ings, preformed inside and outside corner sheet flashings, T-joint covers, lap sealants, termination reglets, and other accessories.

2.3 ROOF INSULATION

A. General: Preformed roof insulation boards manufactured or approved by TPO membrane roofing manufacturer, selected from manufacturer's standard sizes suitable for application, of thicknesses indicated and that produce FM Approvals-approved roof insulation.

B. Polyisocyanurate Board Insulation: ASTM C 1289, Type II, Class 1, Grade 2, felt or glass-fiber mat facer on both major surfaces.

C. Tapered Insulation: Provide factory-tapered insulation boards fabricated to slope of 1/4 inch per 12 inches (1:48) unless otherwise indicated.

2.4 INSULATION ACCESSORIES

A. Cover Board: ASTM C 1177/C 1177M, glass-mat, water-resistant gypsum substrate, 1/2 inch (13 mm) thick, factory primed.

1. Products: Subject to compliance with requirements, provide one of the following:

a. Georgia-Pacific Corporation; Dens Deck Prime.

2.5 WALKWAYS

A. Flexible Walkways: Factory-formed, nonporous, heavy-duty, slip-resisting, surface-textured walkway pads or rolls, approximately 3/16 inch 5 mm thick, and acceptable to membrane roofing system manufacturer.

PART 3 - EXECUTION

3.1 EXAMINATION

A. Examine substrates, areas, and conditions, with Installer present, for compliance with the following requirements and other conditions affecting performance of roofing system:

1. Verify that roof openings and penetrations are in place and curbs are set and braced and that roof drain bodies are securely clamped in place.
2. Verify that wood blocking, curbs, and nailers are securely anchored to roof deck at penetrations and terminations and that nailers match thicknesses of insulation.
3. Verify that surface plane flatness and fastening of steel roof deck complies with requirements in Division 05 Section "Steel Decking."

B. Proceed with installation only after unsatisfactory conditions have been corrected.

3.2 PREPARATION

A. Clean substrate of dust, debris, moisture, and other substances detrimental to roofing installa-

tion according to roofing system manufacturer's written instructions. Remove sharp projections.

B. Prevent materials from entering and clogging roof drains and conductors and from spilling or migrating onto surfaces of other construction. Remove roof-drain plugs when no work is taking place or when rain is forecast.

C. Complete terminations and base flashings and provide temporary seals to prevent water from entering completed sections of roofing system at the end of the workday or when rain is forecast. Remove and discard temporary seals before beginning work on adjoining roofing.

3.3 INSULATION INSTALLATION

A. Coordinate installing membrane roofing system components so insulation is not exposed to precipitation or left exposed at the end of the workday.

B. Comply with membrane roofing system and insulation manufacturer's written instructions for installing roof insulation.

C. Install tapered insulation under area of roofing to conform to slopes indicated.

D. Install insulation under area of roofing to achieve required thickness. Where overall insulation thickness is 2.7 inches 68 mm or greater, install two or more layers with joints of each succeeding layer staggered from joints of previous layer a minimum of 6 inches (150 mm) in each direction.

E. Mechanically Fastened Insulation: Install each layer of insulation and secure to deck using mechanical fasteners specifically designed and sized for fastening specified board-type roof insulation to deck type.

1. Fasten insulation according to requirements in FM Approvals' "RoofNav" for specified Windstorm Resistance Classification.

F. Mechanically Fastened and Adhered Insulation: Install each layer of insulation and secure first layer of insulation to deck using mechanical fasteners specifically designed and sized for fastening specified board-type roof insulation to deck type.

1. Fasten first layer of insulation according to requirements in FM Approvals' "RoofNav" for specified Windstorm Resistance Classification.
2. Set each subsequent layer of insulation in ribbons of bead-applied insulation adhesive, firmly pressing and maintaining insulation in place.

3.4 ADHERED MEMBRANE ROOFING INSTALLATION

A. Adhere membrane roofing over area to receive roofing and install according to membrane roofing system manufacturer's written instructions.

B. Start installation of membrane roofing in presence of membrane roofing system manufacturer's technical personnel.

C. Accurately align membrane roofing and maintain uniform side and end laps of minimum dimensions required by manufacturer. Stagger end laps.

D. Bonding Adhesive: Apply to substrate and underside of membrane roofing at rate required by

manufacturer and allow to partially dry before installing membrane roofing. Do not apply to splice area of membrane roofing.

E. In addition to adhering, mechanically fasten membrane roofing securely at terminations, penetrations, and perimeter of roofing.

F. Apply membrane roofing with side laps shingled with slope of roof deck where possible.

G. Seams: Clean seam areas, overlap membrane roofing, and hot-air weld side and end laps of membrane roofing and sheet flashings according to manufacturer's written instructions to ensure a watertight seam installation.

1. Test lap edges with probe to verify seam weld continuity. Apply lap sealant to seal cut edges of sheet membrane.
2. Verify field strength of seams a minimum of twice daily and repair seam sample areas.
3. Repair tears, voids, and lapped seams in roofing that does not comply with requirements.

H. Spread sealant bed over deck drain flange at roof drains and securely seal membrane roofing in place with clamping ring.

3.5 BASE FLASHING INSTALLATION

A. Install sheet flashings and preformed flashing accessories and adhere to substrates according to membrane roofing system manufacturer's written instructions.

B. Apply bonding adhesive to substrate and underside of sheet flashing at required rate and allow to partially dry. Do not apply to seam area of flashing.

C. Flash penetrations and field-formed inside and outside corners with cured or uncured sheet flashing.

D. Clean seam areas, overlap, and firmly roll sheet flashings into the adhesive. Hot-air weld side and end laps to ensure a watertight seam installation.

E. Terminate and seal top of sheet flashings and mechanically anchor to substrate through termination bars.

3.6 WALKWAY INSTALLATION

A. Flexible Walkways: Install walkway products in locations indicated. Heat weld to substrate or adhere walkway products to substrate with compatible adhesive according to roofing system manufacturer's written instructions.

3.7 FIELD QUALITY CONTROL

A. Final Roof Inspection: Arrange for roofing system manufacturer's technical personnel to inspect roofing installation on completion.

B. Repair or remove and replace components of membrane roofing system where inspections indicate that they do not comply with specified requirements.

C. Additional inspections, at Contractor's expense, will be performed to determine compliance of

replaced or additional work with specified requirements.

3.8 PROTECTING AND CLEANING

A. Protect membrane roofing system from damage and wear during remainder of construction period. When remaining construction will not affect or endanger roofing, inspect roofing for deterioration and damage, describing its nature and extent in a written report, with copies to Architect and Owner.

B. Correct deficiencies in or remove membrane roofing system that does not comply with requirements; repair substrates; and repair or reinstall membrane roofing system to a condition free of damage and deterioration at time of Substantial Completion and according to warranty requirements.

3.9 ROOFING INSTALLER'S WARRANTY

A. WHEREAS <Insert name> of <Insert address>, herein called the "Roofing Installer," has performed roofing and associated work ("work") on the following project:

1. Owner: <Insert name of Owner>.
2. Address: <Insert address>.
3. Building Name/Type: <Insert information>.
4. Address: <Insert address>.
5. Area of Work: <Insert information>.
6. Acceptance Date: <Insert date>.
7. Warranty Period: <Insert time>.
8. Expiration Date: <Insert date>.

B. AND WHEREAS Roofing Installer has contracted (either directly with Owner or indirectly as a subcontractor) to warrant said work against leaks and faulty or defective materials and workmanship for designated Warranty Period,

C. NOW THEREFORE Roofing Installer hereby warrants, subject to terms and conditions herein set forth, that during Warranty Period he will, at his own cost and expense, make or cause to be made such repairs to or replacements of said work as are necessary to correct faulty and defective work and as are necessary to maintain said work in a watertight condition.

D. This Warranty is made subject to the following terms and conditions:

1. Specifically excluded from this Warranty are damages to work and other parts of the building, and to building contents, caused by:

a. Lightning;
b. Peak gust wind speed exceeding 120 mph;
c. Fire;
d. Failure of roofing system substrate, including cracking, settlement, excessive deflection, deterioration, and decomposition;
e. Faulty construction of parapet walls, copings, chimneys, skylights, vents, equipment supports, and other edge conditions and penetrations of the work;
f. Vapor condensation on bottom of roofing; and
g. Activity on roofing by others, including construction contractors, maintenance personnel, other persons, and animals, whether authorized or unauthorized by Owner.

2. When work has been damaged by any of foregoing causes, Warranty shall be null and void until such damage has been repaired by Roofing Installer and until cost and expense thereof have been paid by Owner or by another responsible party so designated.
3. Roofing Installer is responsible for damage to work covered by this Warranty but is not liable for consequential damages to building or building contents resulting from leaks or faults or defects of work.
4. During Warranty Period, if Owner allows alteration of work by anyone other than Roofing Installer, including cutting, patching, and maintenance in connection with penetrations, attachment of other work, and positioning of anything on roof, this Warranty shall become null and void on date of said alterations, but only to the extent said alterations affect work covered by this Warranty. If Owner engages Roofing Installer to perform said alterations, Warranty shall not become null and void unless Roofing Installer, before starting said work, shall have notified Owner in writing, showing reasonable cause for claim, that said alterations would likely damage or deteriorate work, thereby reasonably justifying a limitation or termination of this Warranty.
5. During Warranty Period, if original use of roof is changed and it becomes used for, but was not originally specified for, a promenade, work deck, spray-cooled surface, flooded basin, or other use or service more severe than originally specified, this Warranty shall become null and void on date of said change, but only to the extent said change affects work covered by this Warranty.
6. Owner shall promptly notify Roofing Installer of observed, known, or suspected leaks, defects, or deterioration and shall afford reasonable opportunity for Roofing Installer to inspect work and to examine evidence of such leaks, defects, or deterioration.
7. This Warranty is recognized to be the only warranty of Roofing Installer on said work and shall not operate to restrict or cut off Owner from other remedies and resources lawfully available to Owner in cases of roofing failure. Specifically, this Warranty shall not operate to relieve Roofing Installer of responsibility for performance of original work according to requirements of the Contract Documents, regardless of whether Contract was a contract directly with Owner or a subcontract with Owner's General Contractor.

E. IN WITNESS THEREOF, this instrument has been duly executed this <Insert day> day of <Insert month>, <Insert year>.

1. Authorized Signature: <Insert signature>.
2. Name: <Insert name>.
3. Title: <Insert title>.

END OF SECTION 075423

SECTION 07 6200 - SHEET METAL FLASHING AND TRIM

PART 1 - GENERAL

1.1 SUMMARY

A. Section Includes:

1. Formed Products:

a. Formed roof drainage sheet metal fabrications.
b. Formed low-slope roof sheet metal fabrications.
c. Formed equipment support flashing.

B. Related Sections:

1. Division 06 Section "Miscellaneous Rough Carpentry" for wood nailers, curbs, and blocking.
2. Division 07 Section "Polyvinyl-Chloride (PVC) Roofing" for installing sheet metal flashing and trim integral with membrane roofing.
3. Division 07 Section "Metal Wall Panels" for sheet metal flashing and trim integral with metal wall panels.
4. Division 07 Section "Roof Accessories" roof hatches.
5. Division 07 Section "Expansion Control" for manufactured sheet metal expansion-joint covers.

1.2 PERFORMANCE REQUIREMENTS

A. General: Sheet metal flashing and trim assemblies as indicated shall withstand wind loads, structural movement, thermally induced movement, and exposure to weather without failure due to defective manufacture, fabrication, installation, or other defects in construction. Completed sheet metal flashing and trim shall not rattle, leak, or loosen, and shall remain watertight.

B. Fabricate and install roof edge flashing and copings capable of resisting the following forces according to recommendations in FMG Loss Prevention Data Sheet 1-49:

1. Wind Zone 2: For velocity pressures of 31 to 45 lbf/sq. ft. (1.48 to 2.15 kPa): 90-lbf/sq. ft. (4.31-kPa) perimeter uplift force, 120-lbf/sq. ft. (5.74-kPa) corner uplift force, and 45-lbf/sq. ft. (2.15-kPa) outward force.

C. Thermal Movements: Provide sheet metal flashing and trim that allows for thermal movements from ambient and surface temperature changes.

1. Temperature Change (Range): 120 deg F (67 deg C), ambient; 180 deg F (100 deg C), material surfaces.

1.3 ACTION SUBMITTALS

A. Product Data: For each type of product indicated. Include construction details, material descriptions, dimensions of individual components and profiles, and finishes for each manufactured product and accessory.

B. Shop Drawings: Show fabrication and installation layouts of sheet metal flashing and trim, including plans, elevations, expansion-joint locations, and keyed details. Distinguish between shop- and field-assembled work. Include the following:

1. Identification of material, thickness, weight, and finish for each item and location in Project.
2. Details for forming sheet metal flashing and trim, including profiles, shapes, seams, and dimensions.
3. Details for joining, supporting, and securing sheet metal flashing and trim, including layout of fasteners, cleats, clips, and other attachments. Include pattern of seams.
4. Details of termination points and assemblies, including fixed points.
5. Details of expansion joints and expansion-joint covers, including showing direction of expansion and contraction.
6. Details of edge conditions, including eaves, ridges, valleys, rakes, crickets, and counterflashings as applicable.
7. Details of special conditions.
8. Details of connections to adjoining work.
9. Detail formed flashing and trim at a scale of not less than 1-1/2 inches per 12 inches (1:10).

C. Samples for Initial Selection: For each type of sheet metal flashing, trim, and accessory indicated with factory-applied color finishes involving color selection.

1.4 INFORMATIONAL SUBMITTALS

A. Qualification Data: For qualified fabricator.

B. Warranty: Sample of special warranty.

1.5 CLOSEOUT SUBMITTALS

A. Maintenance Data: For sheet metal flashing, trim, and accessories to include in maintenance manuals.

1.6 QUALITY ASSURANCE

A. Fabricator Qualifications: Shop that employs skilled workers who custom fabricate sheet metal flashing and trim similar to that required for this Project and whose products have a record of successful in-service performance.

B. Sheet Metal Flashing and Trim Standard: Comply with SMACNA's "Architectural Sheet Metal Manual" unless more stringent requirements are specified or shown on Drawings.

C. Preinstallation Conference: Conduct conference at Project site.

1. Meet with Owner, Architect, Owner's insurer if applicable, Installer, and installers whose work interfaces with or affects sheet metal flashing and trim including installers of roofing materials, roof accessories, unit skylights, and roof-mounted equipment.

2. Review methods and procedures related to sheet metal flashing and trim.
3. Examine substrate conditions for compliance with requirements, including flatness and attachment to structural members.
4. Review special roof details, roof drainage, roof penetrations, equipment curbs, and condition of other construction that will affect sheet metal flashing.
5. Document proceedings, including corrective measures and actions required, and furnish copy of record to each participant.

1.7 DELIVERY, STORAGE, AND HANDLING

A. Do not store sheet metal flashing and trim materials in contact with other materials that might cause staining, denting, or other surface damage. Store sheet metal flashing and trim materials away from uncured concrete and masonry.

B. Protect strippable protective covering on sheet metal flashing and trim from exposure to sunlight and high humidity, except to the extent necessary for the period of sheet metal flashing and trim installation.

1.8 WARRANTY

A. Special Warranty on Finishes: Manufacturer's standard form in which manufacturer agrees to repair finish or replace sheet metal flashing and trim that shows evidence of deterioration of factory-applied finishes within specified warranty period.

1. Exposed Panel Finish: Deterioration includes, but is not limited to, the following:

a. Color fading more than 5 Hunter units when tested according to ASTM D 2244.
b. Chalking in excess of a No. 8 rating when tested according to ASTM D 4214.
c. Cracking, checking, peeling, or failure of paint to adhere to bare metal.

2. Finish Warranty Period: 20 years from date of Final Completion.

PART 2 - PRODUCTS

2.1 SHEET METALS

A. General: Protect mechanical and other finishes on exposed surfaces from damage by applying a strippable, temporary protective film before shipping.

B. Metallic-Coated Steel Sheet: Restricted flatness steel sheet, metallic coated by the hot-dip process and prepainted by the coil-coating process to comply with ASTM A 755/A 755M.

1. Zinc-Coated (Galvanized) Steel Sheet: ASTM A 653/A 653M, G90 (Z275) coating designation; structural quality.
2. Surface: Smooth, flat.
3. Exposed Coil-Coated Finish:

a. Mica Fluoropolymer: AAMA 621. Two-coat fluoropolymer finish with suspended mica flakes containing not less than 70 percent PVDF resin by weight in color coat.

Prepare, pretreat, and apply coating to exposed metal surfaces to comply with coating and resin manufacturers' written instructions.

4. Color: As selected by Architect from manufacturer's full range.
5. Concealed Finish: Pretreat with manufacturer's standard white or light-colored acrylic or polyester backer finish, consisting of prime coat and wash coat with a minimum total dry film thickness of 0.5 mil (0.013 mm).

C. Stainless-Steel Sheet: ASTM A 240/A 240M or ASTM A 666, Type 304, dead soft, fully annealed.

1. Finish: 4 (polished directional satin).
2. Surface: [Smooth, flat.

2.2 MISCELLANEOUS MATERIALS

A. General: Provide materials and types of fasteners, solder, welding rods, protective coatings, separators, sealants, and other miscellaneous items as required for complete sheet metal flashing and trim installation and recommended by manufacturer of primary sheet metal or manufactured item unless otherwise indicated.

B. Fasteners: Wood screws, annular threaded nails, self-tapping screws, self-locking rivets and bolts, and other suitable fasteners designed to withstand design loads and recommended by manufacturer of primary sheet metal or manufactured item.

1. General: Blind fasteners or self-drilling screws, gasketed, with hex-washer head.

a. Exposed Fasteners: Heads matching color of sheet metal using plastic caps or factory-applied coating.
b. Blind Fasteners: High-strength aluminum or stainless-steel rivets suitable for metal being fastened.
c. Spikes and Ferrules: Same material as gutter; with spike with ferrule matching internal gutter width.

2. Fasteners for Zinc-Coated (Galvanized) Steel Sheet: Hot-dip galvanized steel according to ASTM A 153/A 153M or ASTM F 2329 or Series 300 stainless steel.

C. Sealant Tape: Pressure-sensitive, 100 percent solids, gray polyisobutylene compound sealant tape with release-paper backing. Provide permanently elastic, nonsag, nontoxic, nonstaining tape 1/2 inch (13 mm) wide and 1/8 inch (3 mm) thick.

D. Elastomeric Sealant: ASTM C 920, elastomeric polyurethane, polysulfide or silicone polymer sealant; low modulus; of type, grade, class, and use classifications required to seal joints in sheet metal flashing and trim and remain watertight.

E. Butyl Sealant: ASTM C 1311, single-component, solvent-release butyl rubber sealant; polyisobutylene plasticized; heavy bodied for hooked-type expansion joints with limited movement.

F. Bituminous Coating: Cold-applied asphalt emulsion complying with ASTM D 1187.

G. Asphalt Roofing Cement: ASTM D 4586, asbestos free, of consistency required for application.

2.3 FABRICATION, GENERAL

A. General: Custom fabricate sheet metal flashing and trim to comply with recommendations in SMACNA's "Architectural Sheet Metal Manual" that apply to design, dimensions, geometry, metal thickness, and other characteristics of item indicated. Fabricate items at the shop to greatest extent possible.

1. Fabricate sheet metal flashing and trim in thickness or weight needed to comply with performance requirements, but not less than that specified for each application and metal.
2. Obtain field measurements for accurate fit before shop fabrication.
3. Form sheet metal flashing and trim without excessive oil canning, buckling, and tool marks and true to line and levels indicated, with exposed edges folded back to form hems.
4. Conceal fasteners and expansion provisions where possible. Exposed fasteners are not allowed on faces exposed to view.

B. Fabrication Tolerances: Fabricate sheet metal flashing and trim that is capable of installation to a tolerance of 1/4 inch in 20 feet (6 mm in 6 m) on slope and location lines as indicated and within 1/8-inch (3-mm) offset of adjoining faces and of alignment of matching profiles.

C. Sealed Joints: Form nonexpansion but movable joints in metal to accommodate elastomeric sealant.

D. Expansion Provisions: Where lapped expansion provisions cannot be used, form expansion joints of intermeshing hooked flanges, not less than 1 inch (25 mm) deep, filled with butyl sealant concealed within joints.

E. Fabricate cleats and attachment devices from same material as accessory being anchored or from compatible, noncorrosive metal.

F. Fabricate cleats and attachment devices of sizes as recommended by SMACNA's "Architectural Sheet Metal Manual" and by FMG Loss Prevention Data Sheet 1-49 for application, but not less than thickness of metal being secured.

G. Seams: Fabricate nonmoving seams with flat-lock seams. Form seams and seal with elastomeric sealant unless otherwise recommended by sealant manufacturer for intended use. Rivet joints where necessary for strength.

H. Do not use graphite pencils to mark metal surfaces.

2.4 ROOF DRAINAGE SHEET METAL FABRICATIONS

A. Hanging Gutters: Fabricate to cross section indicated, complete with end pieces, outlet tubes, and other accessories as required. Fabricate in minimum 96-inch- (2400-mm-) long sections. Furnish flat-stock gutter spacers and gutter brackets fabricated from same metal as gutters, of size recommended by SMACNA but not less than twice the gutter thickness. Fabricate expansion joints, expansion-joint covers, gutter bead reinforcing bars, and gutter accessories from same metal as gutters.

1. Gutter Style: SMACNA designation A.
2. Expansion Joints: Built in.
3. Gutters with Girth up to 15 Inches (380 mm): Fabricate from the following materials:

a. Galvanized Steel: 0.028 inch (0.56 mm)] thick.

B. Downspouts: Fabricate rectangular downspouts complete with mitered elbows. Furnish with metal hangers, from same material as downspouts, and anchors.

1. Fabricated Hanger Style: SMACNA figure designation 1-35A.
2. Fabricate from the following materials:

a. Galvanized Steel: 0.022 inch (0.56 mm) thick.

C. Parapet Scuppers: Fabricate scuppers of dimensions indicated on drawings. Fabricate from the following materials:

a. Stainless Steel: 0.019 inch (0.48 mm).

D. Conductor Heads: Fabricate conductor heads with flanged back and stiffened top edge and of dimensions and shape indicated complete with outlet tubes and built-in overflows. Fabricate from the following materials:

1. Galvanized Steel: 0.028 inch (0.71 mm) thick.

E. Splash Pans: Fabricate from the following materials:

a. Stainless Steel: 0.019 inch (0.48 mm).

2.5 LOW-SLOPE ROOF SHEET METAL FABRICATIONS

A. Copings: Fabricate in minimum 96-inch- (2400-mm-) long, but not exceeding 10-foot- (3-m-) long, sections. Fabricate joint plates of same thickness as copings. Furnish with continuous cleats to support edge of external leg and drill elongated holes for fasteners on interior leg. Miter corners, seal, and solder or weld watertight.

1. Coping Profile: SMACNA figure designation 3-4A.
2. Joint Style: Butt, with 12-inch- (300-mm-) wide, concealed backup plate.
3. Fabricate from the following materials:

a. Galvanized Steel: 0.040 inch (1.02 mm)] thick.

B. Base Flashing: Fabricate from the following materials:

1. Galvanized Steel: 0.028 inch (0.71 mm) thick.

C. Counter-flashing: Fabricate from the following materials:

1. Galvanized Steel: 0.0238inch (0.60 mm) thick.

D. Flashing Receivers: Fabricate from the following materials:

1. Galvanized Steel: 0.022 inch (0.56 mm) thick.

E. Apron, : Fabricate from the following materials:

1. Galvanized Steel: 0.022 inch (0.56 mm) thick.

F. Drip Edges: Fabricate from the following materials:

1. Galvanized Steel: 0.022 inch (0.56 mm) thick.

G. Eave, Rake-Flashing: Fabricate from the following materials:

1. Galvanized Steel: 0.022 inch (0.56 mm) thick.

2.6 MISCELLANEOUS SHEET METAL FABRICATIONS

A. Equipment Support Flashing: Fabricate from the following materials:

1. Galvanized Steel: 0.028 inch (0.71 mm) thick.

PART 3 - EXECUTION

3.1 EXAMINATION

A. Examine substrates, areas, and conditions, with Installer present, to verify actual locations, dimensions and other conditions affecting performance of the Work.

1. Verify compliance with requirements for installation tolerances of substrates.
2. Verify that substrate is sound, dry, smooth, clean, sloped for drainage, and securely anchored.

B. For the record, prepare written report, endorsed by Installer, listing conditions detrimental to performance of the Work.

C. Proceed with installation only after unsatisfactory conditions have been corrected.

3.2 INSTALLATION, GENERAL

A. General: Anchor sheet metal flashing and trim and other components of the Work securely in place, with provisions for thermal and structural movement. Use fasteners, solder, welding rods, protective coatings, separators, sealants, and other miscellaneous items as required to complete sheet metal flashing and trim system.

1. Install sheet metal flashing and trim true to line and levels indicated. Provide uniform, neat seams with minimum exposure of solder, welds, and sealant.
2. Install sheet metal flashing and trim to fit substrates and to result in watertight performance. Verify shapes and dimensions of surfaces to be covered before fabricating sheet metal.
3. Space cleats not more than 12 inches (300 mm) apart. Anchor each cleat with two fasteners. Bend tabs over fasteners.
4. Install exposed sheet metal flashing and trim without excessive oil canning, buckling, and tool marks.
5. Install sealant tape where indicated.
6. Torch cutting of sheet metal flashing and trim is not permitted.
7. Do not use graphite pencils to mark metal surfaces.

B. Metal Protection: Where dissimilar metals will contact each other or corrosive substrates, protect against galvanic action by painting contact surfaces with bituminous coating or by other permanent separation as recommended by SMACNA.

C. Expansion Provisions: Provide for thermal expansion of exposed flashing and trim. Space movement joints at a maximum of 10 feet (3 m) with no joints allowed within 24 inches (600 mm) of corner or intersection. Where lapped expansion provisions cannot be used or would not be sufficiently watertight, form expansion joints of intermeshing hooked flanges, not less than 1 inch (25 mm) deep, filled with sealant concealed within joints.

D. Fastener Sizes: Use fasteners of sizes that will penetrate wood sheathing not less than 1-1/4 inches (32 mm) for nails and not less than 3/4 inch (19 mm) for wood screws and metal decking not less than recommended by fastener manufacturer to achieve maximum pull-out resistance.

E. Seal joints as shown and as required for watertight construction.

1. Where sealant-filled joints are used, embed hooked flanges of joint members not less than 1 inch (25 mm) into sealant. Form joints to completely conceal sealant. When ambient temperature at time of installation is moderate, between 40 and 70 deg F (4 and 21 deg C), set joint members for 50 percent movement each way. Adjust setting proportionately for installation at higher ambient temperatures. Do not install sealant-type joints at temperatures below 40 deg F (4 deg C).
2. Prepare joints and apply sealants to comply with requirements in Division 07 Section "Joint Sealants."

3.3 ROOF DRAINAGE SYSTEM INSTALLATION

A. General: Install sheet metal roof drainage items to produce complete roof drainage system according to SMACNA recommendations and as indicated. Coordinate installation of roof perimeter flashing with installation of roof drainage system.

B. Hanging Gutters: Join sections with riveted and soldered joints or with lapped joints sealed with sealant. Provide for thermal expansion. Attach gutters at eave or fascia to firmly anchored gutter brackets spaced not more than 36 inches (900 mm) apart. Provide end closures and seal watertight with sealant. Slope to downspouts.

1. Fasten gutter spacers to front and back of gutter.
2. Anchor back of gutter that extends onto roof deck with cleats spaced not more than 24 inches (600 mm) apart.
3. Install gutter with expansion joints at locations indicated, but not exceeding, 50 feet (15.24 m) apart. Install expansion-joint caps.

C. Downspouts: Join sections with 1-1/2-inch (38-mm) telescoping joints.

1. Provide hangers with fasteners designed to hold downspouts securely to walls. Locate hangers at top and bottom and at approximately 60 inches (1500 mm) o.c. in between.
2. Provide elbows at base of downspout to direct water away from building.

D. Splash Pans: Install where downspouts discharge on low-slope roofs. Set in elastomeric sealant compatible with roofing membrane.

E. Parapet Scuppers: Install scuppers where indicated through parapet. Continuously support scupper, set to correct elevation, and seal flanges to interior wall face, over cants or tapered edge strips, and under roofing membrane.

3.4 ROOF FLASHING INSTALLATION

A. General: Install sheet metal flashing and trim to comply with performance requirements, sheet metal manufacturer's written installation instructions, and SMACNA's "Architectural Sheet Metal Manual." Provide concealed fasteners where possible, set units true to line, and level as indicated. Install work with laps, joints, and seams that will be permanently watertight and weather resistant.

B. Roof Edge Flashing: Anchor to resist uplift and outward forces according to recommendations in FMG Loss Prevention Data Sheet 1-49 for specified wind zone and as indicated. Interlock bottom edge of roof edge flashing with continuous cleat anchored to substrate at 16-inch (400-mm) centers.

C. Copings: Anchor to resist uplift and outward forces according to recommendations in FMG Loss Prevention Data Sheet 1-49 for specified wind zone and as indicated.

1. Interlock exterior bottom edge of coping with continuous cleat anchored to substrate at 16-inch (400-mm) centers.
2. Anchor interior leg of coping with screw fasteners and washers at 20-inch (500-mm) centers.

D. Counter-flashing: Coordinate installation of counter-flashing with installation of base flashing. Insert counter-flashing in reglets or receivers and fit tightly to base flashing. Extend counter-flashing 4 inches (100 mm) over base flashing. Lap counter-flashing joints a minimum of 4 inches (100 mm) and bed with sealant. Secure in a waterproof manner by means of interlocking folded seam or blind rivets and sealant.

E. Roof-Penetration Flashing: Coordinate installation of roof-penetration flashing with installation of roofing and other items penetrating roof. Seal with elastomeric sealant and clamp flashing to pipes that penetrate roof.

3.5 WALL FLASHING INSTALLATION

A. General: Install sheet metal wall flashing to intercept and exclude penetrating moisture according to SMACNA recommendations and as indicated. Coordinate installation of wall flashing with installation of wall-opening components such as windows, doors, and louvers.

3.6 MISCELLANEOUS FLASHING INSTALLATION

A. Equipment Support Flashing: Coordinate installation of equipment support flashing with installation of roofing and equipment. Weld or seal flashing with elastomeric sealant to equipment support member.

3.7 ERECTION TOLERANCES

A. Installation Tolerances: Shim and align sheet metal flashing and trim within installed tolerance of 1/4 inch in 20 feet (6 mm in 6 m) on slope and location lines as indicated and within 1/8-inch (3-mm) offset of adjoining faces and of alignment of matching profiles.

3.8 CLEANING AND PROTECTION

A. Clean exposed metal surfaces of substances that interfere with uniform oxidation and weathering.

B. Clean off excess sealants.

C. Remove temporary protective coverings and strippable films as sheet metal flashing and trim are installed unless otherwise indicated in manufacturer's written installation instructions. On completion of installation, remove unused materials and clean finished surfaces. Maintain in a clean condition during construction.

D. Replace sheet metal flashing and trim that have been damaged or that have deteriorated beyond successful repair by finish touchup or similar minor repair procedures.

END OF SECTION 07 6200

SECTION 07 7200 - ROOF ACCESSORIES

PART 1 - GENERAL

1.1 RELATED DOCUMENTS

A. Drawings and general provisions of the Contract, including General and Supplementary Conditions and Division 01 Specification Sections, apply to this Section.

1.2 SUMMARY

A. Section Includes:

1. Roof hatches.

B. Related Sections:

1. Division 05 Section "Metal Fabrications" for metal vertical ladders, and stairs for access to roof hatches.
2. Division 07 Section "Sheet Metal Flashing and Trim" for shop- and field-formed metal flashing, roof-drainage systems, roof expansion-joint covers, and miscellaneous sheet metal trim and accessories.

1.3 PERFORMANCE REQUIREMENTS

A. General Performance: Roof accessories shall withstand exposure to weather and resist thermally induced movement without failure, rattling, leaking, or fastener disengagement due to defective manufacture, fabrication, installation, or other defects in construction.

1.4 ACTION SUBMITTALS

A. Product Data: For each type of roof accessory indicated. Include construction details, material descriptions, dimensions of individual components and profiles, and finishes.

B. Shop Drawings: For roof accessories. Include plans, elevations, keyed details, and attachments to other work. Indicate dimensions, loadings, and special conditions. Distinguish between plant- and field-assembled work.

C. Samples: For each exposed product and for each color and texture specified, prepared on Samples of size to adequately show color.

1.5 INFORMATIONAL SUBMITTALS

A. Coordination Drawings: Roof plans, drawn to scale, and coordinating penetrations and roof-mounted items. Show the following:

1. Size and location of roof accessories specified in this Section.
2. Method of attaching roof accessories to roof or building structure.

3. Other roof-mounted items including mechanical and electrical equipment, ductwork, piping, and conduit.
4. Required clearances.

1.6 CLOSEOUT SUBMITTALS

A. Operation and Maintenance Data: For roof accessories to include in operation and maintenance manuals.

1.7 COORDINATION

A. Coordinate layout and installation of roof accessories with roofing membrane and base flashing and interfacing and adjoining construction to provide a leak-proof, weather-tight, secure, and noncorrosive installation.

B. Coordinate dimensions with rough-in information or Shop Drawings of equipment to be supported.

PART 2 - PRODUCTS

2.1 METAL MATERIALS

A. Zinc-Coated (Galvanized) Steel Sheet: ASTM A 653/A 653M, G90 (Z275) coating designation.

1. Baked-Enamel or Powder-Coat Finish: Immediately after cleaning and pretreating, apply manufacturer's standard two-coat, baked-on finish consisting of prime coat and thermosetting topcoat, with a minimum dry film thickness of 1 mil (0.025 mm) for topcoat. Comply with coating manufacturer's written instructions for applying and baking to achieve a minimum dry film thickness of 2 mils (0.05 mm).

B. Steel Shapes: ASTM A 36/A 36M, hot-dip galvanized according to ASTM A 123/A 123M unless otherwise indicated.

C. Steel Tube: ASTM A 500, round tube.

D. Galvanized-Steel Tube: ASTM A 500, round tube, hot-dip galvanized according to ASTM A 123/A 123M.

E. Steel Pipe: ASTM A 53/A 53M, galvanized.

2.2 MISCELLANEOUS MATERIALS

A. General: Provide materials and types of fasteners, protective coatings, sealants, and other miscellaneous items required by manufacturer for a complete installation.

B. Polyisocyanurate Board Insulation: ASTM C 1289, thickness as indicated.

C. Bituminous Coating: Cold-applied asphalt emulsion complying with ASTM D 1187.

D. Fasteners: Roof accessory manufacturer's recommended fasteners suitable for application and metals being fastened. Match finish of exposed fasteners with finish of material being fastened. Provide nonremovable fastener heads to exterior exposed fasteners. Furnish the following unless otherwise indicated:

1. Fasteners for Zinc-Coated or Aluminum-Zinc Alloy-Coated Steel: Series 300 stainless steel or hot-dip zinc-coated steel according to ASTM A 153/A 153M or ASTM F 2329.

E. Gaskets: Manufacturer's standard tubular or fingered design of neoprene, EPDM, PVC, or silicone or a flat design of foam rubber, sponge neoprene, or cork.

F. Elastomeric Sealant: ASTM C 920, elastomeric polyurethane or silicone polymer sealant as recommended by roof accessory manufacturer for installation indicated; low modulus; of type, grade, class, and use classifications required to seal joints and remain watertight.

G. Butyl Sealant: ASTM C 1311, single-component, solvent-release butyl rubber sealant; polyisobutylene plasticized; heavy bodied for expansion joints with limited movement.

H. Asphalt Roofing Cement: ASTM D 4586, asbestos free, of consistency required for application.

2.3 ROOF HATCH

A. Roof Hatches: Fabricate roof hatches with insulated double-wall lids and insulated double-wall curb frame with integral deck mounting flange and lid frame counter-flashing. Fabricate with welded or mechanically fastened and sealed corner joints. Provide continuous weather-tight perimeter gasketing and equip with corrosion-resistant or hot-dip galvanized hardware.

1. Subject to compliance with requirements, provide products by one of the following:

a. Babcock-Davis.
b. **Bilco Company** (The).
c. Dur-Red Products.
d. O'Keeffe's Inc.
e. Nystrom (Basis of Design)

B. Type and Size: Single-leaf lid, 30 by 36 inches (750 by 900 mm).

C. Loads: Fabricate roof hatches to withstand 40-lbf/sq. ft. (1.9-kPa) external and 20-lbf/sq. ft. (0.95-kPa) internal loads.

D. Hatch Material: Zinc-coated (galvanized) steel sheet, [0.079 inch (2.01 mm) thick.

1. Finish: Baked enamel or powder coat.
2. Color: As selected by Architect from manufacturer's full range.

E. Construction:

1. Insulation: Cellulosic-fiber and Glass-fiber board.
2. Hatch Lid: Opaque, insulated, and double walled, with manufacturer's standard metal liner of same material and finish as outer metal lid.
3. Curb Liner: Manufacturer's standard, of same material and finish as metal curb.
4. Fabricate curbs to minimum height of 12 inches (300 mm) unless otherwise indicated.

F. Hardware: Galvanized steel spring latch with turn handles, butt- or pintle-type hinge system, and padlock hasps inside and outside.

G. Safety Railing System: Roof-hatch manufacturer's standard system including rails, clamps, fasteners, and accessories required for a complete installation; attached to each leaf in a position that will place rails at an approximate 45 degree angle when leafs are in the open position.
1. Test Load: same as guardrails in section 055213.
2. Height: 42 inches (1060 mm) above finished roof deck.
3. Pipe or Tube: 1-1/4-inch (31-mm) ID galvanized pipe or 1-5/8-inch (41-mm) OD galvanized tube.
4. Flat Bar: 2-inch- (50-mm-) high by 3/8-inch- (9-mm-) thick galvanized steel.
5. Chain Passway Enclosure: Galvanized proof coil chain with quick link on fixed end.
6. Pipe Ends and Tops: Covered or plugged with weather-resistant material.
7. Provide weep holes or another means to drain entrapped water in hollow sections of handrail and railing members that are exposed to exterior or to moisture from condensation or other sources.
8. Fabricate joints that will be exposed to weather in a watertight manner.
9. Close exposed ends of handrail and railing members with prefabricated end fittings.
10. Fasteners: Manufacturer's standard.

2.4 FLOOR ACCESS DOOR

A.

2.5 GENERAL FINISH REQUIREMENTS

A. Comply with NAAMM's "Metal Finishes Manual for Architectural and Metal Products" for recommendations for applying and designating finishes.

B. Appearance of Finished Work: Noticeable variations in same piece are not acceptable. Variations in appearance of adjoining components are acceptable if they are within the range of approved Samples and are assembled or installed to minimize contrast.

PART 3 - EXECUTION

3.1 EXAMINATION

A. Examine substrates, areas, and conditions, with Installer present, to verify actual locations, dimensions, and other conditions affecting performance of the Work.

B. Verify that substrate is sound, dry, smooth, clean, sloped for drainage, and securely anchored.

C. Verify dimensions of roof openings for roof accessories. Coordinate installation with access stairway and stairway railings.

D. Proceed with installation only after unsatisfactory conditions have been corrected.

3.2 INSTALLATION

A. General: Install roof accessories according to manufacturer's written instructions.

1. Install roof accessories level, plumb, true to line and elevation, and without warping, jogs in alignment, excessive oil canning, buckling, or tool marks.
2. Anchor roof accessories securely in place so they are capable of resisting indicated loads.
3. Use fasteners, separators, sealants, and other miscellaneous items as required to complete installation of roof accessories and fit them to substrates.
4. Install roof accessories to resist exposure to weather without failing, rattling, leaking, or loosening of fasteners and seals.

B. Metal Protection: Protect metals against galvanic action by separating dissimilar metals from contact with each other or with corrosive substrates by painting contact surfaces with bituminous coating or by other permanent separation as recommended by manufacturer.

C. Roof-Hatch Installation:

1. Install roof hatch so top surface of hatch curb is level.
2. Verify that roof hatch operates properly. Clean, lubricate, and adjust operating mechanism and hardware.

D. Seal joints with elastomeric or butyl sealant as required by roof accessory manufacturer.

3.3 REPAIR AND CLEANING

A. Galvanized Surfaces: Clean field welds, bolted connections, and abraded areas and repair galvanizing according to ASTM A 780.

B. Clean exposed surfaces according to manufacturer's written instructions.

C. Clean off excess sealants.

D. Replace roof accessories that have been damaged or that cannot be successfully repaired by finish touchup or similar minor repair procedures.

END OF SECTION 07 7200

SECTION 07 8413 - PENETRATION FIRESTOPPING

PART 1 - GENERAL

1.1 RELATED DOCUMENTS

A. Drawings and general provisions of the Contract, including General and Supplementary Conditions and Division 01 Specification Sections, apply to this Section.

1.2 SUMMARY

A. Section Includes:

1. Penetrations in fire-resistance-rated walls.

1.3 ACTION SUBMITTALS

A. Product Data: For each type of product indicated.

B. Product Schedule and Assembly Shop Drawings: For each penetration firestopping system assembly. Include location and design designation of qualified testing and inspecting agency.

1. Each application submitted shall be accurately marked to show the actual test/listed assembly to be provided, including the construction surrounding the penetration, sleeves, firestopping products and associated materials, and any options allowed and selected under the tested/listed assembly. The marking shall not use color highlighting and the data shall be marked to indicate materials and assembly options not applicable, by marking out such non-applicable (non-proposed) requirements, while still having the marked out item readable through the strike-out. If the submitted application is copied directly from a UL directory illustration or similar publication with small format lettering, enlarge the copy to be readable from a distance of 12 incles without magnification to the Architect’s satisfaction.

2. Where Project conditions require modification to a qualified testing and inspecting agency's illustration for a particular penetration firestopping condition, submit illustration, with modifications marked, approved by penetration firestopping manufacturer's fire-protection engineer as an engineering judgment or equivalent fire-resistance-rated assembly.

1.4 INFORMATIONAL SUBMITTALS

A. Qualification Data: For qualified Installer.

B. Installer Certificates: From Installer indicating penetration firestopping has been installed in compliance with requirements and manufacturer's written recommendations.

C. Product Test Reports: Based on evaluation of comprehensive tests performed by a qualified testing agency, for penetration firestopping.

1.5 QUALITY ASSURANCE

A. Installer Qualifications: A firm that has been approved by FM Global according to FM Global 4991, "Approval of Firestop Contractors," or been evaluated by UL and found to comply with its "Qualified Firestop Contractor Program Requirements."

B. Fire-Test-Response Characteristics: Penetration firestopping shall comply with the following requirements:

1. Penetration firestopping tests are performed by a qualified testing agency acceptable to authorities having jurisdiction.
2. Penetration firestopping is identical to those tested per testing standard referenced in "Penetration Firestopping" Article. Provide rated systems complying with the following requirements:

a. Penetration firestopping products bear classification marking of qualified testing and inspecting agency.
b. Classification markings on penetration firestopping correspond to designations listed by the following:

1) UL in its "Fire Resistance Directory."

1.6 PROJECT CONDITIONS

A. Environmental Limitations: Do not install penetration firestopping when ambient or substrate temperatures are outside limits permitted by penetration firestopping manufacturers or when substrates are wet because of rain, frost, condensation, or other causes.

B. Install and cure penetration firestopping per manufacturer's written instructions using natural means of ventilations or, where this is inadequate, forced-air circulation.

1.7 COORDINATION

A. Coordinate construction of openings and penetrating items to ensure that penetration firestopping is installed according to specified requirements.

B. Coordinate sizing of sleeves, openings, core-drilled holes, or cut openings to accommodate penetration firestopping.

C. Notify contractor’s testing agency at least seven days in advance of penetration firestopping installations; confirm dates and times on day preceding each series of installations.

PART 2 - PRODUCTS

2.1 MANUFACTURERS

A. Manufacturers: Subject to compliance with requirements, provide products by one of the following:

1. A/D Fire Protection Systems Inc.
2. Grace Construction Products.
3. Hilti, Inc.
4. Johns Manville.
5. Nelson Firestop Products.
6. NUCO Inc.
7. Passive Fire Protection Partners.
8. RectorSeal Corporation.
9. Specified Technologies Inc.
10. 3M Fire Protection Products.
11. Tremco, Inc.; Tremco Fire Protection Systems Group.
12. USG Corporation.

2.2 PENETRATION FIRESTOPPING

A. Provide penetration firestopping that is produced and installed to resist spread of fire according to requirements indicated, resist passage of smoke and other gases, and maintain original fire-resistance rating of construction penetrated. Penetration firestopping systems shall be compatible with one another, with the substrates forming openings, and with penetrating items if any.

B. Penetrations in Fire-Resistance-Rated Walls: Provide penetration firestopping with ratings determined per ASTM E 814 or UL 1479, based on testing at a positive pressure differential of 0.01-inch wg (2.49 Pa).

1. Fire-resistance-rated walls include fire-barrier walls.
2. F-Rating: Not less than the fire-resistance rating of constructions penetrated.

C. Penetrations in Horizontal Assemblies: Provide penetration firestopping with ratings determined per ASTM E 814 or UL 1479, based on testing at a positive pressure differential of 0.01-inch wg.
1. Horizontal assemblies include [floors] [floor/ceiling assemblies] [and] [ceiling membranes of roof/ceiling assemblies].
2. F-Rating: At least 1 hour, but not less than the fire-resistance rating of constructions penetrated.

D. Penetrations in Smoke Barriers: Provide penetration firestopping with ratings determined per UL 1479.
1. L-Rating: Not exceeding 5.0 cfm/sq. ft. of penetration opening at 0.30-inch wg at both ambient and elevated temperatures.

E. W-Rating: Provide penetration firestopping showing no evidence of water leakage when tested according to UL 1479.

F. Exposed Penetration Firestopping: Provide products with flame-spread and smoke-developed indexes of less than 25 and 450, respectively, as determined per ASTM E 84.

G. VOC Content: Penetration firestopping sealants and sealant primers shall comply with the following limits for VOC content when calculated according to 40 CFR 59, Subpart D (EPA Method 24):

1. Sealants: 250 g/L.
2. Sealant Primers for Nonporous Substrates: 250 g/L.

3. Sealant Primers for Porous Substrates: 775 g/L.

H. Low-Emitting Materials: Penetration firestopping sealants and sealant primers shall comply with the testing and product requirements of the California Department of Health Services' "Standard Practice for the Testing of Volatile Organic Emissions from Various Sources Using Small-Scale Environmental Chambers."

I. Accessories: Provide components for each penetration firestopping system that are needed to install fill materials and to maintain ratings required. Use only those components specified by penetration firestopping manufacturer and approved by qualified testing and inspecting agency for firestopping indicated.

1. Permanent forming/damming/backing materials, including the following:

a. Slag-wool-fiber or rock-wool-fiber insulation.
b. Sealants used in combination with other forming/damming/backing materials to prevent leakage of fill materials in liquid state.
c. Fire-rated form board.
d. Fillers for sealants.

2. Temporary forming materials.
3. Substrate primers.
4. Collars.
5. Steel sleeves.

2.3 FILL MATERIALS

A. Latex Sealants: Single-component latex formulations that do not re-emulsify after cure during exposure to moisture.

B. Firestop Devices: Factory-assembled collars formed from galvanized steel and lined with intumescent material sized to fit specific diameter of penetrant.

C. Intumescent Composite Sheets: Rigid panels consisting of aluminum-foil-faced elastomeric sheet bonded to galvanized-steel sheet.

D. Intumescent Putties: Nonhardening dielectric, water-resistant putties containing no solvents, inorganic fibers, or silicone compounds.

E. Intumescent Wrap Strips: Single-component intumescent elastomeric sheets with aluminum foil on one side.

F. Mortars: Prepackaged dry mixes consisting of a blend of inorganic binders, hydraulic cement, fillers, and lightweight aggregate formulated for mixing with water at Project site to form a nonshrinking, homogeneous mortar.

G. Pillows/Bags: Reusable heat-expanding pillows/bags consisting of glass-fiber cloth cases filled with a combination of mineral-fiber, water-insoluble expansion agents, and fire-retardant additives. Where exposed, cover openings with steel-reinforcing wire mesh to protect pillows/bags from being easily removed.

H. Silicone Foams: Multicomponent, silicone-based liquid elastomers that, when mixed, expand and cure in place to produce a flexible, nonshrinking foam.

I. Silicone Sealants: Single-component, silicone-based, neutral-curing elastomeric sealants of grade indicated below:

1. Grade: Pourable (self-leveling) formulation for openings in floors and other horizontal surfaces, and nonsag formulation for openings in vertical and sloped surfaces, unless indicated firestopping limits use of nonsag grade for both opening conditions.

2.4 MIXING

A. For those products requiring mixing before application, comply with penetration firestopping manufacturer's written instructions for accurate proportioning of materials, water (if required), type of mixing equipment, selection of mixer speeds, mixing containers, mixing time, and other items or procedures needed to produce products of uniform quality with optimum performance characteristics for application indicated.

PART 3 - EXECUTION

3.1 EXAMINATION

A. Examine substrates and conditions, with Installer present, for compliance with requirements for opening configurations, penetrating items, substrates, and other conditions affecting performance of the Work.

B. Proceed with installation only after unsatisfactory conditions have been corrected.

3.2 PREPARATION

A. Surface Cleaning: Clean out openings immediately before installing penetration firestopping to comply with manufacturer's written instructions and with the following requirements:

1. Remove from surfaces of opening substrates and from penetrating items foreign materials that could interfere with adhesion of penetration firestopping.
2. Clean opening substrates and penetrating items to produce clean, sound surfaces capable of developing optimum bond with penetration firestopping. Remove loose particles remaining from cleaning operation.
3. Remove laitance and form-release agents from concrete.

B. Priming: Prime substrates where recommended in writing by manufacturer using that manufacturer's recommended products and methods. Confine primers to areas of bond; do not allow spillage and migration onto exposed surfaces.

C. Masking Tape: Use masking tape to prevent penetration firestopping from contacting adjoining surfaces that will remain exposed on completion of the Work and that would otherwise be permanently stained or damaged by such contact or by cleaning methods used to remove stains. Remove tape as soon as possible without disturbing firestopping's seal with substrates.

3.3 INSTALLATION

A. General: Install penetration firestopping to comply with manufacturer's written installation instructions and published drawings for products and applications indicated.

B. Install forming materials and other accessories of types required to support fill materials during their application and in the position needed to produce cross-sectional shapes and depths required to achieve fire ratings indicated.

1. After installing fill materials and allowing them to fully cure, remove combustible forming materials and other accessories not indicated as permanent components of firestopping.

C. Install fill materials for firestopping by proven techniques to produce the following results:

1. Fill voids and cavities formed by openings, forming materials, accessories, and penetrating items as required to achieve fire-resistance ratings indicated.
2. Apply materials so they contact and adhere to substrates formed by openings and penetrating items.
3. For fill materials that will remain exposed after completing the Work, finish to produce smooth, uniform surfaces that are flush with adjoining finishes.

3.4 IDENTIFICATION

A. Identify penetration firestopping with preprinted metal or plastic labels. Attach labels permanently to surfaces adjacent to and within 6 inches (150 mm) of firestopping edge so labels will be visible to anyone seeking to remove penetrating items or firestopping. Use mechanical fasteners or self-adhering-type labels with adhesives capable of permanently bonding labels to surfaces on which labels are placed. Include the following information on labels:

1. The words "Warning - Penetration Firestopping - Do Not Disturb. Notify Building Management of Any Damage."
2. Contractor's name, address, and phone number.
3. Designation of applicable testing and inspecting agency.
4. Date of installation.
5. Manufacturer's name.
6. Installer's name.

3.5 FIELD QUALITY CONTROL

A. Engage a qualified testing agency to perform tests and inspections.

B. Where deficiencies are found or penetration firestopping is damaged or removed because of testing, repair or replace penetration firestopping to comply with requirements.

C. Proceed with enclosing penetration firestopping with other construction only after inspection reports are issued and installations comply with requirements.

3.6 CLEANING AND PROTECTION

A. Clean off excess fill materials adjacent to openings as the Work progresses by methods and with cleaning materials that are approved in writing by penetration firestopping manufacturers and that do not damage materials in which openings occur.

B. Provide final protection and maintain conditions during and after installation that ensure that penetration firestopping is without damage or deterioration at time of Substantial Completion. If, despite such protection, damage or deterioration occurs, immediately cut out and remove

damaged or deteriorated penetration firestopping and install new materials to produce systems complying with specified requirements.

END OF SECTION 07 8413

SECTION 078443 - JOINT FIRESTOPPING

PART 1 - GENERAL

1.1 RELATED DOCUMENTS

A. Drawings and general provisions of the Contract, including General and Supplementary Conditions and Division 01 Specification Sections, apply to this Section.

1.2 SUMMARY

A. This Section includes fire-resistive joint systems for the following:

1. Joints in or between fire-resistance-rated constructions.
2. Joints at exterior curtain-wall/floor intersections.
3. Joints in smoke barriers.

B. Related Sections include the following:

1. Section 078413 "Penetration Firestopping" for penetrations in fire-resistance-rated walls, horizontal assemblies, and smoke barriers[**and for wall identification**].
2. Section 079500 "Expansion Control" for fire-resistive architectural joint systems.
3. Section 092216 "Non-Structural Metal Framing" for firestop tracks for metal-framed partition heads.

1.3 PERFORMANCE REQUIREMENTS

A. General: Provide fire-resistive joint systems that are produced and installed to resist spread of fire according to requirements indicated, resist passage of smoke and other gases, and maintain original fire-resistance rating of assembly in which fire-resistive joint systems are installed.

B. Joint Systems in and between Fire-Resistance-Rated Constructions: Provide systems with assembly ratings equaling or exceeding the fire-resistance ratings of construction that they join, and with movement capabilities and L-ratings indicated as determined by UL 2079.

1. Load-bearing capabilities as determined by evaluation during the time of test.

C. For fire-resistive systems exposed to view, provide products with flame-spread and smoke-developed indexes of less than 25 and 450, respectively, as determined per ASTM E 84.

1.4 SUBMITTALS

A. Product Data: For each type of product indicated.

B. Shop Drawings: For each fire-resistive joint system, show each kind of construction condition in which joints are installed; also show relationships to adjoining construction. Include fire-resistive joint system design designation of testing and inspecting agency acceptable to authorities having jurisdiction that demonstrates compliance with requirements for each condition indicated.

1. Submit documentation, including illustrations, from a qualified testing and inspecting agency that is applicable to each fire-resistive joint system configuration for construction and penetrating items.

C. Product Certificates: For each type of fire-resistive joint system, signed by product manufacturer.

D. Qualification Data: For Installer.

E. Evaluation Reports: Evidence of fire-resistive joint systems' compliance with ICBO ES AC30, from the ICBO Evaluation Service.

F. Research/Evaluation Reports: For each type of fire-resistive joint system.

1.5 QUALITY ASSURANCE

A. Installer Qualifications: A firm that has been approved by FMG according to FMG 4991, "Approval of Firestop Contractors."

B. Installation Responsibility: Assign installation of through-penetration firestop systems and fire-resistive joint systems in Project to a single qualified installer.

C. Source Limitations: Obtain fire-resistive joint systems, for each kind of joint and construction condition indicated, through one source from a single manufacturer.

D. Fire-Test-Response Characteristics: Provide fire-resistive joint systems that comply with the following requirements and those specified in Part 1 "Performance Requirements" Article:

1. Fire-resistance tests are performed by a qualified testing and inspecting agency. A qualified testing and inspecting agency is UL or another agency performing testing and follow-up inspection services for fire-resistive joint systems acceptable to authorities having jurisdiction.
2. Fire-resistive joint systems are identical to those tested per methods indicated in Part 1 "Performance Requirements" Article and comply with the following:

    a. Fire-resistive joint system products bear classification marking of qualified testing and inspecting agency.
    b. Fire-resistive joint systems correspond to those indicated by referencing system designations of the qualified testing and inspecting agency.

1.6 DELIVERY, STORAGE, AND HANDLING

A. Deliver fire-resistive joint system products to Project site in original, unopened containers or packages with qualified testing and inspecting agency's classification marking applicable to Project and with intact and legible manufacturers' labels identifying product and manufacturer, date of manufacture, lot number, shelf life, curing time, and mixing instructions for multicomponent materials.

B. Store and handle materials for fire-resistive joint systems to prevent their deterioration or damage due to moisture, temperature changes, contaminants, or other causes.

1.7 PROJECT CONDITIONS

A. Environmental Limitations: Do not install fire-resistive joint systems when ambient or substrate temperatures are outside limits permitted by fire-resistive joint system manufacturers or when substrates are wet due to rain, frost, condensation, or other causes.

B. Ventilate fire-resistive joint systems per manufacturer's written instructions by natural means or, if this is inadequate, forced-air circulation.

1.8 COORDINATION

A. Coordinate construction of joints to ensure that fire-resistive joint systems are installed according to specified requirements.

B. Coordinate sizing of joints to accommodate fire-resistive joint systems.

PART 2 - PRODUCTS

2.1 PERFORMANCE REQUIREMENTS

A. Fire-Test-Response Characteristics:
1. Perform joint firestopping system tests by a qualified testing agency acceptable to authorities having jurisdiction.
2. Test per testing standards referenced in "Joint Firestopping Systems" Article. Provide rated systems complying with the following requirements:
a. Joint firestopping systems shall bear classification marking of a qualified testing agency.
1) UL in its "Fire Resistance Directory."
2) Intertek Group in its "Directory of Listed Building Products."

2.2 JOINT FIRESTOPPING

A. Joint Firestopping Systems: Systems that resist spread of fire, passage of smoke and other gases, and maintain original fire-resistance rating of assemblies in or between which joint firestopping systems are installed. Joint firestopping systems shall accommodate building movements without impairing their ability to resist the passage of fire and hot gases.

B. Joints in or between Fire-Resistance-Rated Construction: Provide joint firestopping systems with ratings determined per ASTM E 1966 or UL 2079.
1. Manufacturers: Subject to compliance with requirements, **provide products by one of the following**:
a. 3M Fire Protection Products.
b. A/D Fire Protection Systems Inc.
c. Blazeframe Industries.
d. Grabber Construction Products.
e. Hilti, Inc.
f. Metal-Lite.
g. Nelson Firestop; a brand of Emerson Industrial Automation.
h. NUCO Inc.
i. Passive Fire Protection Partners.
j. RectorSeal.
k. Roxul Inc.
l. Specified Technologies, Inc.
m. Thermafiber, Inc.; an Owens Corning company.
n. Tremco, Inc.
2. Fire-Resistance Rating: Equal to or exceeding the fire-resistance rating of the wall, floor, or roof in or between which it is installed.

C. Joints in Smoke Barriers: Provide fire-resistive joint systems with ratings determined per UL 2079 based on testing at a positive pressure differential of 0.30-inch wg .
   1. Manufacturers: Subject to compliance with requirements, **provide products by one of the following**:
      a. 3M Fire Protection Products.
      b. A/D Fire Protection Systems Inc.
      c. Hilti, Inc.
      d. Nelson Firestop; a brand of Emerson Industrial Automation.
      e. NUCO Inc.
      f. Passive Fire Protection Partners.
      g. RectorSeal.
      h. Roxul Inc.
      i. Specified Technologies, Inc.
      j. Thermafiber, Inc.; an Owens Corning company.
      k. Tremco, Inc.

   2. L-Rating: Not exceeding 5.0 cfm/ft. of joint at both ambient and elevated temperatures.

D. Exposed Joint Firestopping Systems: Flame-spread and smoke-developed indexes of less than 25 and 450, respectively, as determined per ASTM E 84.
   1. Sealant shall have a VOC content of 250 g/L or less.
   2. Sealant shall comply with the testing and product requirements of the California Department of Public Health's "Standard Method for the Testing and Evaluation of Volatile Organic Chemical Emissions from Indoor Sources Using Environmental Chambers.

E. Accessories: Provide components of fire-resistive joint systems, including primers and forming materials, that are needed to install elastomeric fill materials and to maintain ratings required. Use only components specified by joint firestopping system manufacturer and approved by the qualified testing agency for conditions indicated.

2.3 FIRE-RESISTIVE JOINT SYSTEMS

A. Compatibility: Provide fire-resistive joint systems that are compatible with joint substrates, under conditions of service and application, as demonstrated by fire-resistive joint system manufacturer based on testing and field experience.

B. Accessories: Provide components of fire-resistive joint systems, including primers and forming materials, that are needed to install fill materials and to comply with Part 1 "Performance Requirements" Article. Use only components specified by fire-resistive joint system manufacturer and approved by the qualified testing and inspecting agency for systems indicated.

PART 3 - EXECUTION

3.1 EXAMINATION

A. Examine substrates and conditions, with Installer present, for compliance with requirements for joint configurations, substrates, and other conditions affecting performance of work.

1. Proceed with installation only after unsatisfactory conditions have been corrected.

3.2 PREPARATION

A. Surface Cleaning: Clean joints immediately before installing fire-resistive joint systems to comply with fire-resistive joint system manufacturer's written instructions and the following requirements:

1. Remove from surfaces of joint substrates foreign materials that could interfere with adhesion of fill materials.
2. Clean joint substrates to produce clean, sound surfaces capable of developing optimum bond with fill materials. Remove loose particles remaining from cleaning operation.
3. Remove laitance and form-release agents from concrete.

B. Priming: Prime substrates where recommended in writing by fire-resistive joint system manufacturer using that manufacturer's recommended products and methods. Confine primers to areas of bond; do not allow spillage and migration onto exposed surfaces.

3.3 INSTALLATION

A. General: Install fire-resistive joint systems to comply with Part 1 "Performance Requirements" Article and fire-resistive joint system manufacturer's written installation instructions for products and applications indicated.

B. Install forming/packing/backing materials and other accessories of types required to support fill materials during their application and in position needed to produce cross-sectional shapes and depths required to achieve fire ratings indicated.

C. Install fill materials for fire-resistive joint systems by proven techniques to produce the following results:

1. Fill voids and cavities formed by openings and forming/packing/backing materials as required to achieve fire-resistance ratings indicated.
2. Apply fill materials so they contact and adhere to substrates formed by joints.
3. For fill materials that will remain exposed after completing Work, finish to produce smooth, uniform surfaces that are flush with adjoining finishes.

3.4 FIELD QUALITY CONTROL

A. Inspecting Agency: Owner will engage a qualified testing agency to perform tests and inspections according to ASTM E 2393.

B. Where deficiencies are found or joint firestopping systems are damaged or removed due to testing, repair or replace joint firestopping systems so they comply with requirements.

C. Proceed with enclosing joint firestopping systems with other construction only after inspection reports are issued and installations comply with requirements.

3.5 CLEANING AND PROTECTING

A. Clean off excess fill materials adjacent to joints as Work progresses by methods and with cleaning materials that are approved in writing by fire-resistive joint system manufacturers and that do not damage materials in which openings occur.

B. Provide final protection and maintain conditions during and after installation that ensure fire-resistive joint systems are without damage or deterioration at time of Substantial Completion. If damage or deterioration occurs despite such protection, cut out and remove damaged or deteriorated fire-resistive joint systems immediately and install new materials to produce fire-resistive joint systems complying with specified requirements.

3.6 IDENTIFICATION

A. Joint Identification: Identify joint firestopping systems with legible metal or plastic labels. Attach labels permanently to surfaces adjacent to and within 6 inches of joint edge so labels are visible to anyone seeking to remove or joint firestopping system. Use mechanical fasteners or self-adhering-type labels with adhesives capable of permanently bonding labels to surfaces on which labels are placed. Include the following information on labels:
   1. The words "Warning - Joint Firestopping - Do Not Disturb. Notify Building Management of Any Damage."
   2. Contractor's name, address, and phone number.
   3. Designation of applicable testing agency.
   4. Date of installation.
   5. Manufacturer's name.

3.7 FIRE-RESISTIVE JOINT SYSTEM SCHEDULE

A. Designation System for Joints in or between Fire-Resistance-Rated Constructions: Provide alphanumeric systems listed in UL's "Fire Resistance Directory" under Product Category XHBN.

B. Floor-to-Wall Fire-Resistive Joint Systems:

   1. UL-Classified Systems: As recommended by manufacturer for application indicated.
   2. Assembly Rating: 1 hour and 2 hours as indicated on Drawings.
   3. Nominal Joint Width: As indicated.
   4. Movement Capabilities: Class I - 100 percent.

C. Head-of-Wall Fire-Resistive Joint Systems:

   1. UL-Classified Systems: As recommended by manufacturer for application indicated.
   2. Assembly Rating: 1 hour and 2 hours as indicated on Drawings.
   3. Nominal Joint Width: As indicated.
   4. Movement Capabilities: Class I - 100 percent.

D. Wall-to-Wall Fire-Resistive Joint Systems:

   1. UL-Classified Systems: As recommended by manufacturer for application indicated.
   2. Assembly Rating: 1 hour and 2 hours as indicated on Drawings.
   3. Nominal Joint Width: As indicated.
   4. Movement Capabilities: Class I - 100 percent.

END OF SECTION 078446

SECTION 07 9200 - JOINT SEALANTS

PART 1 - GENERAL

1.1 RELATED DOCUMENTS

A. Drawings and general provisions of the Contract, including General and Supplementary Conditions and Division 01 Specification Sections, apply to this Section.

1.2 SUMMARY

A. Section Includes:

1. Silicone joint sealants.
2. Latex joint sealants.
3. Acoustical joint sealants.

B. Related Sections:

1. Division 04 Section "Unit Masonry" for masonry control and expansion joint fillers and gaskets.
2. Division 07 Section "Expansion Control" for building expansion joints.
3. Division 07 Section "Fire-Resistive Joint Systems" for sealing joints in fire-resistance-rated construction.
4. Division 08 Section "Glazing" for glazing sealants.
5. Division 09 Section "Gypsum Board" for sealing perimeter joints.
6. Division 32 Section "Concrete Paving Joint Sealants" for sealing joints in pavements, walkways, and curbing.

1.3 PRECONSTRUCTION TESTING

A. Preconstruction Compatibility and Adhesion Testing: Submit to joint-sealant manufacturers, for testing indicated below, samples of materials that will contact or affect joint sealants.

1. Use ASTM C 1087 to determine whether priming and other specific joint preparation techniques are required to obtain rapid, optimum adhesion of joint sealants to joint substrates.
2. Submit not fewer than eight pieces of each kind of material, including joint substrates, shims, joint-sealant backings, secondary seals, and miscellaneous materials.
3. Schedule sufficient time for testing and analyzing results to prevent delaying the Work.
4. For materials failing tests, obtain joint-sealant manufacturer's written instructions for corrective measures including use of specially formulated primers.
5. Testing will not be required if joint-sealant manufacturers submit joint preparation data that are based on previous testing, not older than 24 months, of sealant products for adhesion to, and compatibility with, joint substrates and other materials matching those submitted.

B. Preconstruction Stain Testing, Silicone Sealants: Submit to joint sealant manufacturer for silicone sealants to be used in masonry, stone, and similar porous joints, the actual joint materials for testing in accordance with ASTM C124B, to determine whether the sealants to be

used will cause staining of the surrounding joint materials. Schedule sufficient time for testing and analyzing results to prevent delaying the Work. For sealant materials failing tests, obtain joint sealant manufacturer' written requirements for the products and procedures to be used to result in no staining.

1.4 ACTION SUBMITTALS

A. Product Data: For each joint-sealant product indicated.

B. Samples for Initial Selection: Manufacturer's color charts consisting of strips of cured sealants showing the full range of colors available for each product exposed to view.

C. Joint-Sealant Schedule: Include the following information:

1. Joint-sealant application, joint location, and designation.
2. Joint-sealant manufacturer and product name.
3. Joint-sealant formulation.
4. Joint-sealant color.

1.5 INFORMATIONAL SUBMITTALS

A. Qualification Data: For qualified Installer.

B. Product Certificates: For each kind of joint sealant and accessory, from manufacturer.

C. Product Test Reports: Based on evaluation of comprehensive tests performed by a qualified testing agency, indicating that sealants comply with requirements.

D. Preconstruction Compatibility and Adhesion Test Reports: From sealant manufacturer, indicating the following:

1. Materials forming joint substrates and joint-sealant backings have been tested for compatibility and adhesion with joint sealants.
2. Interpretation of test results and written recommendations for primers and substrate preparation needed for adhesion.

1.6 QUALITY ASSURANCE

A. Installer Qualifications: Manufacturer's authorized representative who is trained and approved for installation of units required for this Project.

B. Source Limitations: Obtain each kind of joint sealant from single source from single manufacturer.

C. Product Testing: Test joint sealants using a qualified testing agency.

1. Testing Agency Qualifications: An independent testing agency qualified according to ASTM C 1021 to conduct the testing indicated.
2. Test according to SWRI's Sealant Validation Program for compliance with requirements specified by reference to ASTM C 920 for adhesion and cohesion under cyclic movement, adhesion-in-peel, and indentation hardness.

1.7 PROJECT CONDITIONS

A. Do not proceed with installation of joint sealants under the following conditions:

1. When ambient and substrate temperature conditions are outside limits permitted by joint-sealant manufacturer or are below 40 deg F (5 deg C).
2. When joint substrates are wet.
3. Where joint widths are less than those allowed by joint-sealant manufacturer for applications indicated.
4. Where contaminants capable of interfering with adhesion have not yet been removed from joint substrates.

1.8 WARRANTY

A. Special Installer's Warranty: Installer's standard form in which Installer agrees to repair or replace elastomeric joint sealants that do not comply with performance and other requirements specified in this Section within specified warranty period.

1. Warranty Period: Two years from date of Final Completion.

B. Special Manufacturer's Warranty: Manufacturer's standard form in which elastomeric sealant manufacturer agrees to furnish elastomeric joint sealants to repair or replace those that do not comply with performance, including non-staining of adjacent materials, and other requirements specified in this Section within specified warranty period.

C. Special warranties specified in this Article exclude deterioration or failure of elastomeric joint sealants from the following:

1. Movement of the structure resulting in stresses on the sealant exceeding sealant manufacturer's written specifications for sealant elongation and compression caused by structural settlement or errors attributable to design or construction.
2. Disintegration of joint substrates from natural causes exceeding design specifications.
3. Mechanical damage caused by individuals, tools, or other outside agents.
4. Changes in sealant appearance caused by accumulation of dirt or other atmospheric contaminants.

PART 2 - PRODUCTS

2.1 MATERIALS, GENERAL

A. Compatibility: Provide joint sealants, backings, and other related materials that are compatible with one another and with joint substrates under conditions of service and application, as demonstrated by joint-sealant manufacturer, based on testing and field experience.

B. VOC Content of Interior Sealants: Sealants and sealant primers used inside the weatherproofing system shall comply with the following limits for VOC content when calculated according to 40 CFR 59, Subpart D (EPA Method 24):

1. Architectural Sealants: 250 g/L.
2. Sealant Primers for Nonporous Substrates: 250 g/L.
3. Sealant Primers for Porous Substrates: 775 g/L.

C. Liquid-Applied Joint Sealants: Comply with ASTM C 920 and other requirements indicated for each liquid-applied joint sealant specified, including those referencing ASTM C 920 classifications for type, grade, class, and uses related to exposure and joint substrates.

D. Stain-Test-Response Characteristics: Where sealants are specified to be nonstaining to porous substrates, provide products that have undergone testing according to ASTM C 1248 and have not stained porous joint substrates indicated for Project.

E. Suitability for Contact with Food: Where sealants are indicated for joints that will come in repeated contact with food, provide products that comply with 21 CFR 177.2600.

F. Colors of Exposed Joint Sealants: As selected by Architect from manufacturer's full range.

2.2 SILICONE JOINT SEALANTS

A. Single-Component, Nonsag, Neutral-Curing Silicone Joint Sealant ES-1: ASTM C 920, Type S, Grade NS, Class 50, for Use NT.

1. Products: Subject to compliance with requirements, provide one of the following:

a. Dow Corning Corporation; 791.
b. Pecora Corporation; 864.
c. Tremco Incorporated; Spectrem 3.

B. Single-Component, Pourable, Traffic-Grade, Neutral-Curing Silicone Joint Sealant ES-2: ASTM C 920, Type S, Grade P, Class 100/50, for Use T.

1. Products: Subject to compliance with requirements, provide one of the following:

a. Dow Corning Corporation; 890-SL.
b. Pecora Corporation; 300 SL.
c. Tremco Incorporated; Spectrem 900 SL.

C. Mildew-Resistant, Single-Component, Nonsag, Neutral-Curing Silicone Joint Sealant ES-3: ASTM C 920, Type S, Grade NS, Class 25, for Use NT.

1. Products: Subject to compliance with requirements, provide one of the following:

a. Pecora Corporation; 898.
b. Tremco; Tremsil 600 White.

2.3 LATEX JOINT SEALANTS

A. Latex Joint Sealant LS-1: Acrylic latex or siliconized acrylic latex, ASTM C 834, Type OP, Grade NF.

1. Products: Subject to compliance with requirements, provide one of the following:

a. Pecora Corporation; AC-20+.
b. Tremco Incorporated; Tremflex 834.

2.4 ACOUSTICAL JOINT SEALANTS

A. Acoustical Joint Sealant AS-1: Manufacturer's standard nonsag, paintable, nonstaining latex sealant complying with ASTM C 834. Product effectively reduces airborne sound transmission through perimeter joints and openings in building construction as demonstrated by testing representative assemblies according to ASTM E 90.

1. Products: Subject to compliance with requirements, provide one of the following:

a. Pecora Corporation; AC-20 FTR.
b. USG Corporation; SHEETROCK Acoustical Sealant.

2.5 JOINT SEALANT BACKING

A. General: Provide sealant backings of material that are nonstaining; are compatible with joint substrates, sealants, primers, and other joint fillers; and are approved for applications indicated by sealant manufacturer based on field experience and laboratory testing.

B. Cylindrical Sealant Backings: ASTM C 1330, Type C (closed-cell material with a surface skin) or Type B (bicellular material with a surface skin), and of size and density to control sealant depth and otherwise contribute to producing optimum sealant performance.

C. Bond-Breaker Tape: Polyethylene tape or other plastic tape recommended by sealant manufacturer for preventing sealant from adhering to rigid, inflexible joint-filler materials or joint surfaces at back of joint. Provide self-adhesive tape where applicable.

2.6 MISCELLANEOUS MATERIALS

A. Primer: Material recommended by joint-sealant manufacturer where required for adhesion of sealant to joint substrates indicated, as determined from preconstruction joint-sealant-substrate tests and field tests.

B. Cleaners for Nonporous Surfaces: Chemical cleaners acceptable to manufacturers of sealants and sealant backing materials, free of oily residues or other substances capable of staining or harming joint substrates and adjacent nonporous surfaces in any way, and formulated to promote optimum adhesion of sealants to joint substrates.

C. Masking Tape: Nonstaining, nonabsorbent material compatible with joint sealants and surfaces adjacent to joints.

PART 3 - EXECUTION

3.1 EXAMINATION

A. Examine joints indicated to receive joint sealants, with Installer present, for compliance with requirements for joint configuration, installation tolerances, and other conditions affecting joint-sealant performance.

B. Proceed with installation only after unsatisfactory conditions have been corrected.

3.2 PREPARATION

A. Surface Cleaning of Joints: Clean out joints immediately before installing joint sealants to comply with joint-sealant manufacturer's written instructions and the following requirements:

1. Remove all foreign material from joint substrates that could interfere with adhesion of joint sealant, including dust, paints (except for permanent, protective coatings tested and approved for sealant adhesion and compatibility by sealant manufacturer), old joint sealants, oil, grease, waterproofing, water repellents, water, surface dirt, and frost.
2. Clean porous joint substrate surfaces by brushing, grinding, mechanical abrading, or a combination of these methods to produce a clean, sound substrate capable of developing optimum bond with joint sealants. Remove loose particles remaining after cleaning operations above by vacuuming or blowing out joints with oil-free compressed air. Porous joint substrates include the following:

    a. Concrete.
    b. Masonry.

3. Remove laitance and form-release agents from concrete.
4. Clean nonporous joint substrate surfaces with chemical cleaners or other means that do not stain, harm substrates, or leave residues capable of interfering with adhesion of joint sealants. Nonporous joint substrates include the following:

    a. Metal.
    b. Glass.
    c. Porcelain enamel.

B. Joint Priming: Prime joint substrates where recommended by joint-sealant manufacturer or as indicated by preconstruction joint-sealant-substrate tests or prior experience. Apply primer to comply with joint-sealant manufacturer's written instructions. Confine primers to areas of joint-sealant bond; do not allow spillage or migration onto adjoining surfaces.

C. Masking Tape: Use masking tape where required to prevent contact of sealant or primer with adjoining surfaces that otherwise would be permanently stained or damaged by such contact or by cleaning methods required to remove sealant smears. Remove tape immediately after tooling without disturbing joint seal.

3.3 INSTALLATION OF JOINT SEALANTS

A. General: Comply with joint-sealant manufacturer's written installation instructions for products and applications indicated, unless more stringent requirements apply.

B. Sealant Installation Standard: Comply with recommendations in ASTM C 1193 for use of joint sealants as applicable to materials, applications, and conditions indicated.

C. Install sealant backings of kind indicated to support sealants during application and at position required to produce cross-sectional shapes and depths of installed sealants relative to joint widths that allow optimum sealant movement capability.

1. Do not leave gaps between ends of sealant backings.
2. Do not stretch, twist, puncture, or tear sealant backings.
3. Remove absorbent sealant backings that have become wet before sealant application and replace them with dry materials.

D. Install bond-breaker tape behind sealants where sealant backings are not used between sealants and backs of joints.

E. Install sealants using proven techniques that comply with the following and at the same time backings are installed:

1. Place sealants so they directly contact and fully wet joint substrates.
2. Completely fill recesses in each joint configuration.
3. Produce uniform, cross-sectional shapes and depths relative to joint widths that allow optimum sealant movement capability.

F. Tooling of Nonsag Sealants: Immediately after sealant application and before skinning or curing begins, tool sealants according to requirements specified in subparagraphs below to form smooth, uniform beads of configuration indicated; to eliminate air pockets; and to ensure contact and adhesion of sealant with sides of joint.

1. Remove excess sealant from surfaces adjacent to joints.
2. Use tooling agents that are approved in writing by sealant manufacturer and that do not discolor sealants or adjacent surfaces.
3. Provide concave joint profile per Figure 8A in ASTM C 1193, unless otherwise indicated.
4. Provide flush joint profile where indicated per Figure 8B in ASTM C 1193.
5. Provide recessed joint configuration of recess depth and at locations indicated per Figure 8C in ASTM C 1193.

a. Use masking tape to protect surfaces adjacent to recessed tooled joints.

G. Acoustical Sealant Installation: At sound-rated assemblies and elsewhere as indicated, seal construction at perimeters, behind control joints, and at openings and penetrations with a continuous bead of acoustical sealant. Install acoustical sealant at both faces of partitions at perimeters and through penetrations. Comply with ASTM C 919 and with manufacturer's written recommendations.

3.4 CLEANING

A. Clean off excess sealant or sealant smears adjacent to joints as the Work progresses by methods and with cleaning materials approved in writing by manufacturers of joint sealants and of products in which joints occur.

3.5 PROTECTION

A. Protect joint sealants during and after curing period from contact with contaminating substances and from damage resulting from construction operations or other causes so sealants are without deterioration or damage at time of Substantial Completion. If, despite such protection, damage or deterioration occurs, cut out and remove damaged or deteriorated joint sealants immediately so installations with repaired areas are indistinguishable from original work.

3.6 JOINT-SEALANT SCHEDULE

A. Joint-Sealant Application: Exterior joints in vertical surfaces and horizontal nontraffic surfaces (ES-1).

1. Joint Locations:

a. Control and expansion joints in unit masonry
b. Joints between metal panels.
c. Joints between different materials listed above
d. Perimeter joints between materials listed above and frames of doors, windows, and louvers

2. Silicone Joint Sealant: Single component, nonsag, neutral curing, Class 50.
3. Joint-Sealant Color: As selected by Architect from manufacturer's full range of colors.

B. Joint-Sealant Application: Interior joints in horizontal traffic surfaces (ES-2).

1. Joint Locations:

a. Isolation joints in cast-in-place concrete slabs.
b. Control and expansion joints in tile flooring.

2. Silicone Joint Sealant: Single component, pourable, traffic grade, neutral curing.
3. Joint-Sealant Color: As selected by Architect from manufacturer's full range of colors.

C. Joint-Sealant Application: Interior joints in vertical surfaces and horizontal nontraffic surfaces (LS-1).

1. Joint Locations:

a. Control and expansion joints on exposed interior surfaces of exterior walls.
b. Perimeter joints of exterior openings where indicated.
c. Vertical joints on exposed surfaces of interior unit masonry walls and partitions.
d. Perimeter joints between interior wall surfaces and frames of interior doors and windows.

2. Joint Sealant: Latex.
3. Joint-Sealant Color: As selected by Architect from manufacturer's full range of colors.

D. Joint-Sealant Application: Mildew-resistant interior joints in vertical surfaces and horizontal nontraffic surfaces (ES-3).

1. Joint Sealant Location:

a. Joints between plumbing fixtures and adjoining walls, floors, and counters.

2. Joint Sealant: Mildew resistant, single component, nonsag, neutral curing, Silicone or Single component, nonsag, mildew resistant, acid curing.
3. Joint-Sealant Color: As selected by Architect from manufacturer's full range of colors.

E. Joint-Sealant Application: Interior acoustical joints in vertical surfaces and horizontal nontraffic surfaces (AS-1).

1. Joint Location:

a. Acoustical joints where indicated.

2. Joint Sealant: Acoustical.
3. Joint-Sealant Color: As selected by Architect from manufacturer's full range.

END OF SECTION 07 9200

SECTION 07 9500 - EXPANSION CONTROL

PART 1 - GENERAL

1.1 RELATED DOCUMENTS

A. Drawings and general provisions of the Contract, including General and Supplementary Conditions and Division 01 Specification Sections, apply to this Section.

1.2 SUMMARY

A. Section Includes:

1. Interior expansion control systems.
2. Exterior wall expansion control systems.

B. Related Requirements:

1. Division 07 Section "Joint Sealants" for liquid-applied joint sealants and for elastomeric sealants without metal frames.

1.3 ACTION SUBMITTALS

A. Shop Drawings: For each expansion control system specified. Include plans, elevations, sections, details, splices, blockout requirement, attachments to other work, and line diagrams showing entire route of each expansion control system. Where expansion control systems change planes, provide isometric or clearly detailed drawing depicting how components interconnect.

B. Samples for Initial Selection: For each type of expansion control system indicated.

1. Include manufacturer's color charts showing the full range of colors and finishes available for each exposed metal and elastomeric seal material.

C. Samples for Verification: For each type of expansion control system indicated, full width by 6 inches (150 mm) long in size.

1.4 INFORMATIONAL SUBMITTALS

A. Product Test Reports: For each fire barrier provided as part of an expansion control system, for tests performed by a qualified testing agency.

PART 2 - PRODUCTS

2.1 SYSTEM DESCRIPTION

A. General: Provide expansion control systems of design, basic profile, materials, and operation indicated. Provide units with capability to accommodate variations in adjacent surfaces.

1. Furnish units in longest practicable lengths to minimize field splicing. Install with hairline mitered corners where expansion control systems change direction or abut other materials.
2. Include factory-fabricated closure materials and transition pieces, T-joints, corners, curbs, cross-connections, and other accessories as required to provide continuous expansion control systems.

B. Coordination: Coordinate installation of exterior wall expansion control systems with roof expansion control systems to ensure that wall transitions are watertight. Roof expansion joint assemblies are specified in Division 07 Sections.

2.2 PERFORMANCE REQUIREMENTS

A. Fire-Resistance Ratings: Where indicated, provide expansion control systems with fire barriers identical to those of systems tested for fire resistance per UL 2079 or ASTM E 1966 by a testing and inspecting agency acceptable to authorities having jurisdiction.

1. Hose Stream Test: Wall-to-wall and wall-to-ceiling systems shall be subjected to hose stream testing.

2.3 INTERIOR EXPANSION CONTROL SYSTEMS

A. Subject to compliance with requirements, provide product by one of the following:

1. Architectural Art Mfg., Inc.; Division of Pittcon Industries.
2. Balco, Inc.
3. Construction Specialties, Inc.
4. JointMaster/InPro Corporation.
5. MM Systems Corporation.
6. Nystrom, Inc.
7. Watson Bowman Acme Corp.; a BASF Construction Chemicals business.

B. Source Limitations: Obtain expansion control systems from single source from single manufacturer.

C. Wall-to-Wall:

1. Watson Bowman Acme; Model “CWWF/C”. (Basis of Design).
2. Design Criteria:

a. Nominal Joint Width: As indicated on Drawings.
b. Provide wall-to-wall expansion control systems at each face of interior walls where joints are exposed to view.

D. Wall-to-Ceiling:

1. Watson Bowman Acme; Model “CWCA” (Basis of Design)..
2. Design Criteria:

a. Nominal Joint Width: As indicated on Drawings.

E. Ceiling-to-Ceiling:

1. Watson Bowman Acme; Model “CWCA”. (Basis of Design).
2. Design Criteria:

a. Nominal Joint Width: As indicated on Drawings.

2.4 EXTERIOR WALL EXPANSION CONTROL SYSTEMS

A. Subject to compliance with requirements, provide product by one of the following:

1. Architectural Art Mfg., Inc.; Division of Pittcon Industries.
2. Balco, Inc.
3. Construction Specialties, Inc.
4. JointMaster/InPro Corporation.
5. MM Systems Corporation.
6. Nystrom, Inc.
7. Watson Bowman Acme Corp.; a BASF Construction Chemicals business.

B. Source Limitations: Obtain expansion control systems from single source from single manufacturer.

C. Wall-to-Wall:

1. Watson Bowman Acme; Model “WSW-200”. (Basis of Design).
2. Design Criteria:

a. Nominal Joint Width: As indicated on Drawings.
b. Fire-Resistance Rating: Provide expansion control system and Watson Bowman Acme ThermoShield Fire Barrier assembly with a rating not less than 1 hour.
c. Provide wall-to-wall interior expansion control systems at interior face of exterior walls at conditions where joints are exposed to view.

2.5 ACCESSORIES

A. Moisture Barriers: Manufacturer's standard moisture barrier consisting of a continuous, waterproof membrane within joint and attached to substrate on sides of joint below the primary cover.

2.6 MATERIALS

A. Aluminum: ASTM B 221 (ASTM B 221M), Alloy 6063-T5 for extrusions; ASTM B 209 (ASTM B 209M), Alloy 6061-T6 for sheet and plate.

1. Apply manufacturer's standard protective coating on aluminum surfaces to be placed in contact with cementitious materials.

B. Elastomeric Seals: ASTM E 1783; preformed elastomeric membranes or extrusions to be installed in metal frames.

C. Compression Seals: ASTM E 1612; preformed elastomeric extrusions having an internal baffle system and designed to function under compression.

D. Moisture Barrier: Flexible elastomeric material, PVC, minimum 30 mils thick, EPDM, minimum 45 mils thick or Santoprene.

E. Accessories: Manufacturer's standard anchors, clips, fasteners, set screws, spacers, and other accessories compatible with material in contact, as indicated or required for complete installations.

2.7 GENERAL FINISH REQUIREMENTS

A. Comply with NAAMM's "Metal Finishes Manual for Architectural and Metal Products" for recommendations for applying and designating finishes.

B. Protect mechanical finishes on exposed surfaces from damage by applying a strippable, temporary protective covering before shipping.

C. Appearance of Finished Work: Noticeable variations in same piece are not acceptable. Variations in appearance of adjoining components are acceptable if they are within the range of approved Samples and are assembled or installed to minimize contrast.

2.8 ALUMINUM FINISHES

A. Mill finish.

PART 3 - EXECUTION

3.1 EXAMINATION

A. Examine surfaces where expansion control systems will be installed for installation tolerances and other conditions affecting performance of work.

1. Proceed with installation only after unsatisfactory conditions have been corrected.

3.2 PREPARATION

A. Prepare substrates according to expansion control system manufacturer's written instructions.

B. Coordinate and furnish anchorages, setting drawings, and instructions for installing expansion control systems. Provide fasteners of metal, type, and size to suit type of construction indicated and to provide for secure attachment of expansion control systems.

3.3 INSTALLATION

A. Comply with manufacturer's written instructions for storing, handling, and installing expansion control systems and materials unless more stringent requirements are indicated.

B. Metal Frames: Perform cutting, drilling, and fitting required to install expansion control systems.

1. Install in true alignment and proper relationship to joints and adjoining finished surfaces measured from established lines and levels.
2. Adjust for differences between actual structural gap and nominal design gap due to ambient temperature at time of installation. Notify Architect where discrepancies occur that will affect proper expansion control system installation and performance.
3. Cut and fit ends to accommodate thermal expansion and contraction of metal without buckling of frames.
4. Repair or grout blockout as required for continuous frame support using nonmetallic, shrinkage-resistant grout.
5. Install frames in continuous contact with adjacent surfaces.

    a. Shimming is not permitted.

6. Locate anchors at interval recommended by manufacturer, but not less than 3 inches (75 mm) from each end and not more than 24 inches (600 mm) o.c.

C. Seals in Metal Frames: Install elastomeric seals and membranes in frames to comply with manufacturer's written instructions. Install with minimum number of end joints.

1. Provide in continuous lengths for straight sections.
2. Seal transitions according to manufacturer's written instructions. Vulcanize or heat-weld field-spliced joints as recommended by manufacturer.
3. Installation: Mechanically lock seals into frames or adhere to frames with adhesive or pressure-sensitive tape as recommended by manufacturer.

D. Compression Seals: Apply adhesive or lubricant adhesive as recommended by manufacturer to both frame interfaces before installing compression seals.

E. Terminate exposed ends of expansion control systems with field- or factory-fabricated termination devices.

F. Fire-Resistance-Rated Assemblies: Coordinate installation of expansion control system materials and associated work so complete assemblies comply with assembly performance requirements.

1. Fire Barriers: Install fire barriers to provide continuous, uninterrupted fire resistance throughout length of joint, including transitions and field splices.

G. Moisture Barrier: Provide at all exterior joints and where indicated on Drawings. Provide drainage fittings at a maximum of 50 feet (15.2 m) or where indicated on Drawings.

3.4 PROTECTION

A. Do not remove protective covering until finish work in adjacent areas is complete. When protective covering is removed, clean exposed metal surfaces to comply with manufacturer's written instructions.

B. Protect the installation from damage by work of other Sections. Where necessary due to heavy construction traffic, remove and properly store cover plates or seals and install temporary protection over expansion control systems. Reinstall cover plates or seals prior to Substantial Completion of the Work.

END OF SECTION 07 9500

SECTION 08 1113 - HOLLOW METAL DOORS AND FRAMES

PART 1 - GENERAL

1.1 RELATED DOCUMENTS

A. Drawings and general provisions of the Contract, including General and Supplementary Conditions and Division 01 Specification Sections, apply to this Section.

1.2 SUMMARY

A. Section Includes:

1. Standard hollow metal doors and frames.

B. Related Sections:

1. Division 04 Section "Unit Masonry" for embedding anchors for hollow metal work into masonry construction.
2. Division 08 Section “Door Hardware” for door hardware for hollow metal doors.
3. Division 09 Sections "Exterior Painting" and "Interior Painting" for field painting hollow metal doors and frames.
4. Division 26 Sections for electrical connections including conduit and wiring for door controls and operators.

1.3 DEFINITIONS

A. Minimum Thickness: Minimum thickness of base metal without coatings.

B. Standard Hollow Metal Work: Hollow metal work fabricated according to ANSI/SDI A250.8.

1.4 ACTION SUBMITTALS

A. Product Data: For each type of product indicated. Include construction details, material descriptions, core descriptions, fire-resistance rating, temperature-rise ratings, and finishes.

B. Shop Drawings: Include the following:

1. Elevations of each door design.
2. Details of doors, including vertical and horizontal edge details and metal thicknesses.
3. Frame details for each frame type, including dimensioned profiles and metal thicknesses.
4. Locations of reinforcement and preparations for hardware.
5. Details of each different wall opening condition.
6. Details of anchorages, joints, field splices, and connections.
7. Details of accessories.
8. Details of moldings, removable stops, and glazing.
9. Details of conduit and preparations for power, signal, and control systems.
10. Fire rated doors and frames showing conformance with NFPA 80 and Underwriters Laboratory, Inc.

C. Other Action Submittals:

1. Schedule: Provide a schedule of hollow metal work prepared by or under the supervision of supplier, using same reference numbers for details and openings as those on Drawings. Coordinate with door hardware schedule.

1.5 INFORMATIONAL SUBMITTALS

A. Oversize Construction Certification: For assemblies required to be fire rated and exceeding limitations of labeled assemblies.

B. Product Test Reports: Based on evaluation of comprehensive tests performed by a qualified testing agency, for each type of hollow metal door and frame assembly.

1.6 QUALITY ASSURANCE

A. Source Limitations: Obtain hollow metal work from single source from single manufacturer.

B. Fire-Rated Door Assemblies: Assemblies complying with NFPA 80 that are listed and labeled by a qualified testing agency, for fire-protection ratings indicated, based on testing at as close to neutral pressure as possible according to NFPA 252 or UL 10B.

1. Oversize Fire-Rated Door Assemblies: For units exceeding sizes of tested assemblies, provide certification by a qualified testing agency that doors comply with standard construction requirements for tested and labeled fire-rated door assemblies except for size.
2. Temperature-Rise Limit: At vertical exit enclosures and exit passageways, provide doors that have a maximum transmitted temperature end point of not more than 450 deg F (250 deg C) above ambient after 30 minutes of standard fire-test exposure.

1.7 DELIVERY, STORAGE, AND HANDLING

A. Deliver hollow metal work palletized, wrapped, or crated to provide protection during transit and Project-site storage. Do not use non-vented plastic.

1. Provide additional protection to prevent damage to finish of factory-finished units.

B. Deliver welded frames with two removable spreader bars across bottom of frames, tack welded to jambs and mullions.

C. Store hollow metal work under cover at Project site. Place in stacks of five units maximum in a vertical position with heads up, spaced by blocking, on minimum 4-inch- (102-mm-) high wood blocking. Do not store in a manner that traps excess humidity.

1. Provide minimum 1/4-inch (6-mm) space between each stacked door to permit air circulation.

1.8 PROJECT CONDITIONS

A. Field Measurements: Verify actual dimensions of openings by field measurements before fabrication.

1.9 COORDINATION

A. Coordinate installation of anchorages for hollow metal frames. Furnish setting drawings, templates, and directions for installing anchorages, including sleeves, concrete inserts, anchor bolts, and items with integral anchors. Deliver such items to Project site in time for installation.

PART 2 - PRODUCTS

2.1 MANUFACTURERS

A. Manufacturers: Subject to compliance with requirements, provide products by one of the following:

1. Amweld Building Products, LLC.
2. Ceco Door Products; an Assa Abloy Group company.
3. Curries Company; an Assa Abloy Group company.
4. Fleming Door Products Ltd.; an Assa Abloy Group company.
5. Steelcraft; an Ingersoll-Rand company.

2.2 MATERIALS

A. Cold-Rolled Steel Sheet: ASTM A 1008/A 1008M, Commercial Steel (CS), Type B; suitable for exposed applications.

B. Hot-Rolled Steel Sheet: ASTM A 1011/A 1011M, Commercial Steel (CS), Type B; free of scale, pitting, or surface defects; pickled and oiled.

C. Metallic-Coated Steel Sheet: ASTM A 653/A 653M, Commercial Steel (CS), Type B; with minimum G60 (Z180) or A60 (ZF180) metallic coating.

D. Frame Anchors: ASTM A 591/A 591M, Commercial Steel (CS), 40Z (12G) coating designation; mill phosphatized.

1. For anchors built into exterior walls, steel sheet complying with ASTM A 1008/A 1008M or ASTM A 1011/A 1011M, hot-dip galvanized according to ASTM A 153/A 153M, Class B.

E. Inserts, Bolts, and Fasteners: Hot-dip galvanized according to ASTM A 153/A 153M.

F. Grout: ASTM C 476, except with a maximum slump of 4 inches (102 mm), as measured according to ASTM C 143/C 143M.

G. Glazing: Comply with requirements in Division 08 Section "Glazing."

H. Bituminous Coating: Cold-applied asphalt mastic, SSPC-Paint 12, compounded for 15-mil (0.4-mm) dry film thickness per coat. Provide inert-type noncorrosive compound free of asbestos fibers, sulfur components, and other deleterious impurities.

2.3 STANDARD HOLLOW METAL DOORS

A. General: Provide doors of design indicated, not less than thickness indicated; fabricated with smooth surfaces, without visible joints or seams on exposed faces unless otherwise indicated. Comply with ANSI/SDI A250.8.

1. Design: Flush panel with seamless vertical edges.
2. Core Construction: Manufacturer's standard vertical steel-stiffener core. Stiffners to be welded to faces. Provide with voids filled with mineral wool insulation.

    a. Fire Door Core: As required to provide fire-protection and temperature-rise ratings indicated.
    b. Thermal-Rated (Insulated) Doors: Where indicated, provide doors fabricated with thermal-resistance value (R-value) of not less than 12.3 deg F x h x sq. ft./Btu (2.166 K x sq. m/W) when tested according to ASTM C 1363.

        1) Locations: Exterior doors and interior doors where indicated.

3. Vertical Edges for Single-Acting Doors: Beveled edge.

    a. Beveled Edge: 1/8 inch in 2 inches (3 mm in 50 mm).

4. Vertical Edges for Double-Acting Doors: Round vertical edges with 2-1/8-inch (54-mm) radius.
5. Top and Bottom Edges: Closed with flush or inverted 0.042-inch- (1.0-mm-) thick, end closures or channels of same material as face sheets. Top closures for outswing exterior wall doors shall be flush to eliminate possibility of catching water.
6. Tolerances: Comply with SDI 117, "Manufacturing Tolerances for Standard Steel Doors and Frames."

B. Exterior Doors: Face sheets fabricated from metallic-coated steel sheet. Provide doors complying with requirements indicated below by referencing ANSI/SDI A250.8 for level and model and ANSI/SDI A250.4 for physical performance level:

1. Level 3 and Physical Performance Level A (Extra Heavy Duty), Model 2 (Seamless). Exterior door faces minimum 16 gage (0.067 inch).

C. Interior Doors: Face sheets fabricated from cold-rolled steel sheet unless metallic-coated sheet is indicated. Provide doors complying with requirements indicated below by referencing ANSI/SDI A250.8 for level and model and ANSI/SDI A250.4 for physical performance level:

1. Level 3 and Physical Performance Level A (Extra Heavy Duty), Model 2 (Seamless). Interior door faces minimum 16 gage (0.067 inch).

D. Hardware Reinforcement: Fabricate according to ANSI/SDI A250.6 with reinforcing plates from same material as door face sheets.

E. Fabricate concealed stiffeners and hardware reinforcement from either cold- or hot-rolled steel sheet.

1. When vertical steel stiffeners are used for core construction, fill spaces between stiffeners with mineral fiber insulation.

F. Fire Rated Doors (labeled)

1. Conform to NFPA 80 when tested by Underwriters Laboratories, Inc., for the class of door or opening shown.
2. Fire rated labels of metal, with raised or incised markings of approving laboratory shall be permanently attached to doors.
3. Close top and vertical edges of doors flush. Vertical edges shall be seamless. Apply steel astragal to the meeting stile of the active leaf of pairs of fire rated doors, except where vertical rod exit devices are specified for both leaves swinging in the same direction.

2.4 STANDARD HOLLOW METAL FRAMES

A. General: Comply with ANSI/SDI A250.8 and with details indicated for type and profile.

B. Exterior Frames: Fabricated from metallic-coated steel sheet.

1. Fabricate frames with mitered or coped corners.
2. Fabricate frames as full profile welded unless otherwise indicated.
3. Frames for Level 3 Steel Doors: 0.075-inch- (1.9-mm-) thick steel sheet.

C. Interior Frames: Fabricated from cold-rolled steel sheet unless metallic-coated sheet is indicated.

1. Fabricate frames with mitered or coped corners.
2. Fabricate frames as full profile welded unless otherwise indicated.
3. Frames for Level 3 Steel Doors: 0.067-inch- (1.7-mm-) thick steel sheet. 0.075-inch- (1.9-mm) for frames exceeding 48 inches in width.
4. Frames for Wood Doors: 0.067-inch- (1.7-mm-) thick steel sheet. 0.075-inch- (1.9-mm) for frames exceeding 48 inches in width.
5. Frames for Borrowed Lights: 0.067-inch- (1.7-mm-) thick steel sheet. 0.075-inch- (1.9-mm) for frames exceeding 48 inches in width.

D. Frames for labeled fire rated doors.

1. Comply with NFPA 80. Test by Underwriters Laboratories, Inc.
2. Fire rated labels of approving laboratory permanently attached to frames as evidence of conformance with these requirements. Provide labels of metal or engraved stamp, with raised or incised markings.

E. Knocked Down frames are note acceptable.

F. Hardware Reinforcement: Fabricate according to ANSI/SDI A250.6 with reinforcement plates from same material as frames.

2.5 FRAME ANCHORS

A. Jamb Anchors:

1. Masonry Type: Adjustable strap-and-stirrup or T-shaped anchors to suit frame size, not less than 0.042 inch (1.0 mm) thick, with corrugated or perforated straps not less than 2 inches (50 mm) wide by 10 inches (250 mm) long; or wire anchors not less than 0.177 inch (4.5 mm) thick.
2. Stud-Wall Type: Designed to engage stud, welded to back of frames; not less than 0.042 inch (1.0 mm) thick.

3. Post-installed Expansion Type for In-Place Concrete or Masonry: Minimum 3/8-inch- (9.5-mm-) diameter bolts with expansion shields or inserts. Provide pipe spacer from frame to wall, with throat reinforcement plate, welded to frame at each anchor location.

B. Floor Anchors: Formed from same material as frames, not less than 0.042 inch (1.0 mm) thick, and as follows:

1. Monolithic Concrete Slabs: Clip-type anchors, with two holes to receive fasteners.
2. Where floor fills occur, provide extension type floor anchors to compensate for depth of fill.
3. At bottom of jamb use 1.3mm (0.053 inch) thick steel clip angles welded to jamb and drilled to receive two 6 mm (1/4 inch) floor bolts. Use 50 mm x 50 mm (2 inch by 2 inch)9 mm by (3/8 inch) clip angle for lead lined frames, drilled for 9 mm (3/8 inch) floor bolts.
4. Where mullions occur, provide 2.3 mm (0.093 inch) thick steel channel anchors, drilled for 6mm (1/4 inch) floor bolts and frame anchor screws.
5. Where sill sections occur, provide continuous 1 mm (0.042 inch) thick steel rough bucks drilled for 6mm (1/4 inch) floor bolts and frame anchor screws. Space floor bolts at 50 mm (24 inches) on center.

2.6 STOPS AND MOLDINGS

A. Moldings for Glazed Lites in Doors: Minimum 0.032 inch (0.8 mm) thick, fabricated from same material as door face sheet in which they are installed.

B. Fixed Frame Moldings: Formed integral with hollow metal frames, a minimum of 5/8 inch (16 mm) high unless otherwise indicated.

C. Loose Stops for Glazed Lites in Frames: Minimum 0.032 inch (0.8 mm) thick, fabricated from same material as frames in which they are installed.

2.7 ACCESSORIES

A. Mullions and Transom Bars: Join to adjacent members by welding or rigid mechanical anchors.

B. Ceiling Struts: Minimum 1/4-inch-thick by 1-inch- (6.4-mm-thick by 25.4-mm-) wide steel.

C. Grout Guards: Formed from same material as frames, not less than 0.016 inch (0.4 mm) thick.

D. Grout Boxes: Formed from same materials as frames at locations indicated to receive installation of electrical conduit for power or data wiring.

2.8 FABRICATION

A. Fabricate hollow metal work to be rigid and free of defects, warp, or buckle. Accurately form metal to required sizes and profiles, with minimum radius for thickness of metal. Where practical, fit and assemble units in manufacturer's plant. To ensure proper assembly at Project site, clearly identify work that cannot be permanently factory assembled before shipment.

B. Tolerances: Fabricate hollow metal work to tolerances indicated in SDI 117.

C. Hollow Metal Doors:

1. Exterior Doors: Provide weep-hole openings in bottom of exterior doors to permit moisture to escape. Seal joints in top edges of doors against water penetration.
2. Glazed Lites: Factory cut openings in doors.
3. Astragals: Provide overlapping astragal on one leaf of pairs of doors where required by NFPA 80 for fire-performance rating or where indicated. Extend minimum 3/4 inch (19 mm) beyond edge of door on which astragal is mounted.

D. Hollow Metal Frames: Where frames are fabricated in sections due to shipping or handling limitations, provide alignment plates or angles at each joint, fabricated of same thickness metal as frames.

1. Welded Frames: Weld flush face joints continuously; grind, fill, dress, and make smooth, flush, and invisible.
2. Sidelight and Transom Bar Frames: Provide closed tubular members with no visible face seams or joints, fabricated from same material as door frame. Fasten members at crossings and to jambs by butt welding.
3. Provide countersunk, flat- or oval-head exposed screws and bolts for exposed fasteners unless otherwise indicated.
4. Grout Guards: Weld guards to frame at back of hardware mortises in frames to be grouted.
5. Floor Anchors: Weld anchors to bottom of jambs and mullions with at least four spot welds per anchor.
6. Jamb Anchors: Provide number and spacing of anchors as follows:

    a. Masonry Type: Locate anchors not more than 18 inches (457 mm) from top and bottom of frame. Space anchors not more than 32 inches (813 mm) o.c. and as follows:

        1) Two anchors per jamb up to 60 inches (1524 mm) high.
        2) Three anchors per jamb from 60 to 90 inches (1524 to 2286 mm) high.
        3) Four anchors per jamb from 90 to 120 inches (2286 to 3048 mm) high.
        4) Four anchors per jamb plus 1 additional anchor per jamb for each 24 inches (610 mm) or fraction thereof above 120 inches (3048 mm) high.

    b. Stud-Wall Type: Locate anchors not more than 18 inches (457 mm) from top and bottom of frame. Space anchors not more than 32 inches (813 mm) o.c. and as follows:

        1) Three anchors per jamb up to 60 inches (1524 mm) high.
        2) Four anchors per jamb from 60 to 90 inches (1524 to 2286 mm) high.
        3) Five anchors per jamb from 90 to 96 inches (2286 to 2438 mm) high.
        4) Five anchors per jamb plus 1 additional anchor per jamb for each 24 inches (610 mm) or fraction thereof above 96 inches (2438 mm) high.
        5) Two anchors per head for frames above 42 inches (1066 mm) wide and mounted in metal-stud partitions.

    c. Post-installed Expansion Type: Locate anchors not more than 6 inches (152 mm) from top and bottom of frame. Space anchors not more than 26 inches (660 mm) O.C.

7. Door Silencers: Except on weather-stripped doors, drill stops to receive door silencers as follows. Keep holes clear during construction.

a. Single-Door Frames: Drill stop in strike jamb to receive three door silencers.
b. Double-Door Frames: Drill stop in head jamb to receive two door silencers.

E. Fabricate concealed stiffeners, edge channels, and hardware reinforcement from either cold- or hot-rolled steel sheet.

F. Hardware Preparation: Factory prepare hollow metal work to receive templated mortised hardware; include cutouts, reinforcement, mortising, drilling, and tapping according to the Door Hardware Schedule and templates furnished as specified in Division 08 Section "Door Hardware."

1. Locate hardware as indicated, or if not indicated, according to ANSI/SDI A250.8.
2. Reinforce doors and frames to receive nontemplated, mortised and surface-mounted door hardware.
3. Comply with applicable requirements in ANSI/SDI A250.6 and ANSI/DHI A115 Series specifications for preparation of hollow metal work for hardware.
4. Coordinate locations of conduit and wiring boxes for electrical connections with Division 26 Sections.

G. Stops and Moldings: Provide stops and moldings around glazed lites where indicated. Form corners of stops and moldings with butted or mitered hairline joints.

1. Single Glazed Lites: Provide fixed stops and moldings welded on secure side of hollow metal work.
2. Multiple Glazed Lites: Provide fixed and removable stops and moldings so that each glazed lite is capable of being removed independently.
3. Provide fixed frame moldings on outside of exterior and on secure side of interior doors and frames.
4. Provide loose stops and moldings on inside of hollow metal work.
5. Coordinate rabbet width between fixed and removable stops with type of glazing and type of installation indicated.

2.9 STEEL FINISHES

A. Prime Finish: Apply manufacturer's standard primer immediately after cleaning and pretreating.

1. Shop Primer: Manufacturer's standard, fast-curing, lead- and chromate-free primer complying with ANSI/SDI A250.10 acceptance criteria; recommended by primer manufacturer for substrate; compatible with substrate and field-applied coatings despite prolonged exposure.

PART 3 - EXECUTION

3.1 EXAMINATION

A. Examine substrates, areas, and conditions, with Installer present, for compliance with requirements for installation tolerances and other conditions affecting performance of the Work.

B. Examine roughing-in for embedded and built-in anchors to verify actual locations before frame installation.

C. For the record, prepare written report, endorsed by Installer, listing conditions detrimental to performance of the Work.

D. Proceed with installation only after unsatisfactory conditions have been corrected.

3.2 PREPARATION

A. Remove welded-in shipping spreaders installed at factory. Restore exposed finish by grinding, filling, and dressing, as required to make repaired area smooth, flush, and invisible on exposed faces.

B. Prior to installation, adjust and securely brace welded hollow metal frames for squareness, alignment, twist, and plumbness to the following tolerances:

1. Squareness: Plus or minus 1/16 inch (1.6 mm), measured at door rabbet on a line 90 degrees from jamb perpendicular to frame head.
2. Alignment: Plus or minus 1/16 inch (1.6 mm), measured at jambs on a horizontal line parallel to plane of wall.
3. Twist: Plus or minus 1/16 inch (1.6 mm), measured at opposite face corners of jambs on parallel lines, and perpendicular to plane of wall.
4. Plumbness: Plus or minus 1/16 inch (1.6 mm), measured at jambs on a perpendicular line from head to floor.

C. Drill and tap doors and frames to receive nontemplated, mortised, and surface-mounted door hardware.

3.3 INSTALLATION

A. General: Install hollow metal work plumb, rigid, properly aligned, and securely fastened in place; comply with Drawings and manufacturer's written instructions.

B. Hollow Metal Frames: Install hollow metal frames of size and profile indicated. Comply with ANSI/SDI A250.11.

1. Set frames accurately in position, plumbed, aligned, and braced securely until permanent anchors are set. After wall construction is complete, remove temporary braces, leaving surfaces smooth and undamaged.

a. At fire-protection-rated openings, install frames according to NFPA 80.
b. Where frames are fabricated in sections because of shipping or handling limitations, field splice at approved locations by welding face joint continuously; grind, fill, dress, and make splice smooth, flush, and invisible on exposed faces.
c. Install frames with removable glazing stops located on secure side of opening.
d. Install door silencers in frames before grouting.
e. Remove temporary braces necessary for installation only after frames have been properly set and secured.
f. Check plumbness, squareness, and twist of frames as walls are constructed. Shim as necessary to comply with installation tolerances.
g. Field apply bituminous coating to backs of frames that are filled with grout containing antifreezing agents.

2. Floor Anchors: Provide floor anchors for each jamb and mullion that extends to floor, and secure with postinstalled expansion anchors.

a. Floor anchors may be set with powder-actuated fasteners instead of postinstalled expansion anchors if so indicated and approved on Shop Drawings.

3. Metal-Stud Partitions: Solidly pack mineral-fiber insulation behind frames.
4. Masonry Walls: Coordinate installation of frames to allow for solidly filling space between frames and masonry with grout.
5. Concrete Walls: Solidly fill space between frames and concrete with grout. Take precautions, including bracing frames, to ensure that frames are not deformed or damaged by grout forces.
6. In-Place Concrete or Masonry Construction: Secure frames in place with postinstalled expansion anchors. Countersink anchors, and fill and make smooth, flush, and invisible on exposed faces.
7. Ceiling Struts: Extend struts vertically from top of frame at each jamb to overhead structural supports or substrates above frame unless frame is anchored to masonry or to other structural support at each jamb. Bend top of struts to provide flush contact for securing to supporting construction. Provide adjustable wedged or bolted anchorage to frame jamb members.
8. Installation Tolerances: Adjust hollow metal door frames for squareness, alignment, twist, and plumb to the following tolerances:

a. Squareness: Plus or minus 1/16 inch (1.6 mm), measured at door rabbet on a line 90 degrees from jamb perpendicular to frame head.
b. Alignment: Plus or minus 1/16 inch (1.6 mm), measured at jambs on a horizontal line parallel to plane of wall.
c. Twist: Plus or minus 1/16 inch (1.6 mm), measured at opposite face corners of jambs on parallel lines, and perpendicular to plane of wall.
d. Plumbness: Plus or minus 1/16 inch (1.6 mm), measured at jambs at floor.

C. Hollow Metal Doors: Fit hollow metal doors accurately in frames, within clearances specified below. Shim as necessary.

1. Non-Fire-Rated Standard Steel Doors:

a. Jambs and Head: 1/8 inch (3 mm) plus or minus 1/16 inch (1.6 mm).
b. Between Edges of Pairs of Doors: 1/8 inch (3 mm) plus or minus 1/16 inch (1.6 mm).
c. Between Bottom of Door and Top of Threshold: Maximum 3/8 inch (9.5 mm).
d. Between Bottom of Door and Top of Finish Floor (No Threshold): Maximum 3/4 inch (19 mm).

2. Fire-Rated Doors: Install doors with clearances according to NFPA 80.
3. Smoke-Control Doors: Install doors according to NFPA 105.

D. Glazing: Comply with installation requirements in Division 08 Section "Glazing" and with hollow metal manufacturer's written instructions.

1. Secure stops with countersunk flat- or oval-head machine screws spaced uniformly not more than 9 inches (230 mm) o.c. and not more than 2 inches (50 mm) o.c. from each corner.

3.4 ADJUSTING AND CLEANING

A. Final Adjustments: Check and readjust operating hardware items immediately before final inspection. Leave work in complete and proper operating condition. Remove and replace defective work, including hollow metal work that is warped, bowed, or otherwise unacceptable.

B. Remove grout and other bonding material from hollow metal work immediately after installation.

C. Prime-Coat Touchup: Immediately after erection, sand smooth rusted or damaged areas of prime coat and apply touchup of compatible air-drying, rust-inhibitive primer.

D. Metallic-Coated Surfaces: Clean abraded areas and repair with galvanizing repair paint according to manufacturer's written instructions.

END OF SECTION 08 1113

SECTION 08 1416 - FLUSH WOOD DOORS

PART 1 - GENERAL

1.1 RELATED DOCUMENTS

A. Drawings and general provisions of the Contract, including General and Supplementary Conditions and Division 01 Specification Sections, apply to this Section.

1.2 SUMMARY

A. Section Includes:

1. Solid-core doors with wood-veneer faces.
2. Factory finishing flush wood doors.
3. Factory machining for hardware

B. Related Sections:

1. Division 08 Section "Glazing" for glass view panels in flush wood doors.
2. Division 08 Section “Door Hardware” for hardware on wood doors.
3. Division 08 Section “Hollow Metal Doors and Frames” for wood doors in steel frames.

1.3 ACTION SUBMITTALS

A. Product Data: For each type of door indicated. Include details of core and edge construction and trim for openings. Include factory-finishing specifications.

B. Shop Drawings: Indicate location, size, and hand of each door; elevation of each kind of door; construction details not covered in Product Data; location and extent of hardware blocking; and other pertinent data.

1. Indicate dimensions and locations of mortises and holes for hardware.
2. Indicate dimensions and locations of cutouts.
3. Indicate requirements for veneer matching.
4. Indicate doors to be factory finished and finish requirements.
5. Indicate fire-protection ratings for fire-rated doors.
6. Labeled fire rated doors showing conformance w/ NFPA 80.

C. Samples for Initial Selection: For factory-finished doors.

D. Samples for Verification:

1. Factory finishes applied to actual door face materials, approximately 8 by 10 inches (200 by 250 mm), for each material and finish.

1.4 INFORMATIONAL SUBMITTALS

A. Warranty: Sample of special warranty.

B. Laboratory Test Reports:

1. Screw holding capacity test report in accordance with WDMA T.M. 10.
2. Split resistance test report in accordance with WDMA T.M. 5.
3. Sycle/slam test report in accordance with WDMA T.M. 8.

1.5 QUALITY ASSURANCE

A. Manufacturer Qualifications: A qualified manufacturer that is certified for chain of custody by an FSC-accredited certification body.

B. Source Limitations: Obtain flush wood doors from single manufacturer.

C. Quality Standard: In addition to requirements specified, comply with WDMA I.S.1-A, "Architectural Wood Flush Doors."

1.6 DELIVERY, STORAGE, AND HANDLING

A. Comply with requirements of referenced standard and manufacturer's written instructions.

B. Package doors individually in cardboard cartons and wrap bundles of doors in plastic sheeting.

C. Mark each door on top and bottom rail with opening number used on Shop Drawings.

1.7 PROJECT CONDITIONS

A. Environmental Limitations: Do not deliver or install doors until spaces are enclosed and weathertight, wet work in spaces is complete and dry, and HVAC system is operating and maintaining ambient temperature and humidity conditions at occupancy levels during the remainder of the construction period.

1.8 WARRANTY

A. Special Warranty: Manufacturer's standard form in which manufacturer agrees to repair or replace doors that fail in materials or workmanship within specified warranty period.

1. Failures include, but are not limited to, the following:

a. Warping (bow, cup, or twist) more than 1/4 inch (6.4 mm) in a 42-by-84-inch (1067-by-2134-mm) section.
b. Telegraphing of core construction in face veneers exceeding 0.01 inch in a 3-inch (0.25 mm in a 76.2-mm) span.

2. Warranty shall also include installation and finishing that may be required due to repair or replacement of defective doors.
3. Warranty Period for Solid-Core Interior Doors: Life of installation.

1.9 APPLICABLE PUBLICATIONS

A. Publications listed below form a part of this specification to extend referenced publications are referenced in text by basic designation only.

B. Window and Door Manufacturers Association (WDMA):

1.	I.S. 1-A-04	Architectural Wood Flush Doors
2.	I.S. 4-07A	Water-Repellent Preservative Non-Pressure Treatment for Millwork
3.	I.S.6A-01	Architectural Wood Stile and Rail Doors
4.	T.M. 5-90	Split resistance Test Method
5.	T.M. 6-08	Adhesive (Glue Bond) Durability Test Method
6.	T.M. 7-08	Cycle-Slam Test Method
7.	T.M. 8-08	Hinge Loading Test Method
8.	T.M.10-08	Screw-holding Test Method

C. National Fire Protection Association (NFPA):

1.	80-07	Protection of Buildings from Exterior Fire
2.	252-08	Fire Tests of Door Assemblies

D. ASTM International (ASTM):

1.	E90-04	Laboratory Measurements of Airborne Sound Transmission Loss

PART 2 - PRODUCTS

2.1 MANUFACTURERS

A. Manufacturers: Subject to compliance with requirements, provide products by one of the following:

1. Algoma Hardwoods, Inc.
2. Eggers Industries.
3. Graham; an Assa Abloy Group company.
4. VT Industries Inc.

2.2 DOOR CONSTRUCTION, GENERAL

A. Low-Emitting Materials: Fabricate doors with adhesives and composite wood products that do not contain urea formaldehyde.

B. WDMA I.S.1-A Performance Grade: Extra Heavy Duty.

C. Particleboard-Core Doors:

1. Particleboard: ANSI A208.1, Grade LD-2, made with binder containing no urea-formaldehyde resin.
2. Blocking: Provide wood blocking in particleboard-core doors as needed to eliminate through-bolting hardware.

3. Provide doors with structural-composite-lumber cores instead of particleboard cores for doors indicated to receive exit devices.

D. Structural-Composite-Lumber-Core Doors:

1. Structural Composite Lumber: WDMA I.S.10.

a. Screw Withdrawal, Face: 700 lbf (3100 N).
b. Screw Withdrawal, Edge: 400 lbf (1780 N).

E. Mineral-Core Doors:

1. Core: Noncombustible mineral product complying with requirements of referenced quality standard and testing and inspecting agency for fire-protection rating indicated.
2. Blocking: Provide composite blocking with improved screw-holding capability approved for use in doors of fire-protection ratings indicated as needed to eliminate through-bolting hardware.

3. Edge Construction: At hinge stiles, provide laminated-edge construction with improved screw-holding capability and split resistance. Comply with specified requirements for exposed edges.

2.3 VENEERED-FACED DOORS FOR TRANSPARENT FINISH

A. Interior Solid-Core Doors:

1. Grade: Premium, with Grade A faces.
2. Species: Red oak.
3. Cut: Plain sliced (flat sliced).
4. Match between Veneer Leaves: Book match.
5. Assembly of Veneer Leaves on Door Faces: Running match.
6. Pair and Set Match: Provide for doors hung in same opening or separated only by mullions.
7. Exposed Vertical Edges: Same species as faces.
8. Core: Particleboard or structural composite lumber.
9. Construction: Five plies. Stiles and rails are bonded to core, then entire unit abrasive planed before veneering. Faces are bonded to core using a hot press.
10. WDMA I.S.1-A Performance Grade: Extra Heavy Duty.

2.4 LIGHT FRAMES

A. Wood Beads for Light Openings in Wood Doors: Provide manufacturer's standard wood beads as follows unless otherwise indicated.

1. Wood Species: Same species as door faces.
2. Profile: Manufacturer's standard shape.
3. At wood-core doors with 20 to 60-minute fire-protection ratings, provide wood beads and metal glazing clips approved for such use.

2.5 FABRICATION

A. Factory fit doors to suit frame-opening sizes indicated. Comply with clearance requirements of referenced quality standard for fitting unless otherwise indicated.

1. Comply with requirements in NFPA 80 for fire-rated doors.

B. Factory machine doors for hardware that is not surface applied. Locate hardware to comply with DHI-WDHS-3. Comply with final hardware schedules, door frame Shop Drawings, DHI A115-W series standards, and hardware templates.

1. Coordinate with hardware mortises in metal frames to verify dimensions and alignment before factory machining.
2. Metal Astragals: Factory machine astragals and formed-steel edges for hardware for pairs of fire-rated doors.
3. Provide factory application of sealer to edge and routings.

C. Openings: Cut and trim openings through doors in factory.

1. Light Openings: Trim openings with moldings of material and profile indicated.
2. Glazing: Factory install glazing in doors indicated to be factory finished. Comply with applicable requirements in Division 08 Section "Glazing."

2.6 IDENTIFICATION MARK

A. On top edge of door.

B. Provide either a stamp, brand or other indelible mark, giving manufacturer’s name, door’s trade name, construction of door, code date of manufacture and quality

C. Accompanied by either of the following additional requirements:

1. An identification mark or a separate certification including name of inspection organization
2. Identification of standards for door, including glue type.
3. Identification of veneer and quality certification.
4. Identification of preservative treatment for stile and rail doors.

2.7 FACTORY FINISHING

A. General: Comply with referenced quality standard for factory finishing. Complete fabrication, including fitting doors for openings and machining for hardware that is not surface applied, before finishing.

1. Finish faces, all four edges, edges of cutouts, and mortises. Stains and fillers may be omitted on top and bottom edges, edges of cutouts, and mortises.

B. Finish doors at factory.

C. Finish doors at factory that are indicated to receive transparent finish. Field finish doors indicated to receive opaque finish.

D. Transparent Finish:

1. Grade: Premium.
2. Finish: WDMA TR-6 catalyzed polyurethane.
3. Staining: As selected by Architect from manufacturer's full range.
4. Effect: Open-grain finish.
5. Sheen: Satin.

PART 3 - EXECUTION

3.1 EXAMINATION

A. Examine doors and installed door frames before hanging doors.

1. Verify that frames comply with indicated requirements for type, size, location, and swing characteristics and have been installed with level heads and plumb jambs.
2. Reject doors with defects.

B. Proceed with installation only after unsatisfactory conditions have been corrected.

3.2 INSTALLATION

A. Hardware: For installation, see Division 08 Section "Door Hardware."

B. Installation Instructions: Install doors to comply with manufacturer's written instructions and the referenced quality standard, and as indicated.

1. Install fire-rated doors in corresponding fire-rated frames according to NFPA 80.

C. Job-Fitted Doors: Align and fit doors in frames with uniform clearances and bevels as indicated below; do not trim stiles and rails in excess of limits set by manufacturer or permitted for fire-rated doors. Machine doors for hardware. Seal edges of doors, edges of cutouts, and mortises after fitting and machining.

1. Clearances: Provide 1/8 inch (3.2 mm) at heads, jambs, and between pairs of doors. Provide 1/8 inch (3.2 mm) from bottom of door to top of decorative floor finish or covering unless otherwise indicated. Where threshold is shown or scheduled, provide 1/4 inch (6.4 mm) from bottom of door to top of threshold unless otherwise indicated.

a. Comply with NFPA 80 for fire-rated doors.

2. Bevel non-fire-rated doors 1/8 inch in 2 inches (3-1/2 degrees) at lock and hinge edges.
3. Bevel fire-rated doors 1/8 inch in 2 inches (3-1/2 degrees) at lock edge; trim stiles and rails only to extent permitted by labeling agency.

D. Factory-Finished Doors: Restore finish before installation if fitting or machining is required at Project site.

3.3 ADJUSTING

A. Operation: Re-hang or replace doors that do not swing or operate freely.

B. Finished Doors: Replace doors that are damaged or that do not comply with requirements. Doors may be repaired or refinished if work complies with requirements and shows no evidence of repair or refinishing.

3.4 DOOR PROTECTION

A. As door installation is completed, place polyethylene bag or cardboard shipping container over door and tape in place

B. Provide protective covering over knobs and handles in addition to covering door.

C. Maintain covering in good condition until removal is approved by Owner.

END OF SECTION 08 1416

SECTION 08 3113 - ACCESS DOORS AND FRAMES

PART 1 - GENERAL

1.1 RELATED DOCUMENTS

A. Drawings and general provisions of the Contract, including General and Supplementary Conditions and Division 01 Specification Sections, apply to this Section.

1.2 SUMMARY

A. Section Includes:

1. Access doors and frames for walls and ceilings.

2. Floor Access Doors.

1.3 ACTION SUBMITTALS

A. Product Data: For each type of product.

1. Include construction details, materials, individual components and profiles, and finishes.

B. Shop Drawings:

1. Include plans, elevations, sections, details, and attachments to other work.
2. Detail fabrication and installation of access doors and frames for each type of substrate.

PART 2 - PRODUCTS

2.1 ACCESS DOORS AND FRAMES FOR WALLS AND CEILINGS

A. Manufacturers: Subject to compliance with requirements, provide products by one of the following:

1. Acudor Products, Inc.
2. Jensen Industries; Div. of Broan-Nutone, LLC.
3. J. L. Industries, Inc.; Div. of Activar Construction Products Group.
4. Larsen's Manufacturing Company.
5. MIFAB, Inc.
6. Milcor Inc.
7. Nystrom, Inc.

B. Source Limitations: Obtain each type of access door and frame from single source from single manufacturer.

C. Flush Access Doors with Exposed Flanges:

1. Assembly Description: Fabricate door to fit flush to frame. Provide manufacturer's standard-width exposed flange, proportional to door size.
2. Locations: Wall and ceiling.
3. Door Size:

    a. Wall Locations: 24 inches by 24 inches (610 mm by 610 mm).
    b. Ceiling Locations: 12 inches by 12 inches (305 mm by 305 mm)

4. Uncoated Steel Sheet for Door: Nominal 0.060 inch (1.52 mm), 16 gage.

    a. Finish: Factory prime.

5. Frame Material: Same material, thickness, and finish as door.
6. Hinges: Manufacturer's standard continuous hinge.
7. Hardware: Latch.

D. Hardware:

1. Latch: Cam latch.

2.2 FLOOR ACCESS DOOR

A. Basis-of-Design Manufacturer: Type J-AL Access Door by The Bilco Company.

B. Type: Furnish and install where indicated on plans vault access door Type J-AL, size width 36 x length 30 (914 x 762 mm). Length denotes hinge sides. The floor access door shall be single leaf and pre-assembled from the manufacturer.

C. Performance characteristics:

1. Cover: Shall be reinforced to support a minimum live load of 300 psf (1464 kg/m^2) with a maximum deflection of 1/150th of the span.
2. Operation of the cover shall be smooth and easy with controlled operation throughout the entire arc of opening and closing.
3. Operation of the cover shall not be affected by temperature.
4. Entire door, including all hardware components, shall be highly corrosion resistant.

D. Cover: Shall be 1/4” (6mm) aluminum diamond pattern.

E. Frame: Channel frame shall be extruded aluminum with bend down anchor tabs around the perimeter.

F. Hinges: Shall be specifically designed for horizontal installation and shall be through bolted to covers with tamperproof Type 316 stainless steel lock bolts and shall be through bolted to the frame with Type 316 stainless steel bolts and locknuts.

G. Drain Coupling: Provide a 1-1/2” (38mm) drain coupling located in the right front corner of the channel frame [note: can be placed at a different location if specified].

H. Lifting mechanisms: Manufacturer shall provide the required number and size of compression spring operators enclosed in telescopic tubes to provide, smooth, easy, and controlled cover operation throughout the entire arc of opening and to act as a check in retarding downward motion of the covers when closing. The upper tube shall be the outer tube to prevent

accumulation of moisture, grit, and debris inside the lower tube assembly. The lower tube shall interlock with a flanged support shoe fastened to a formed 1/4" (6mm) gusset support plate.

I. A removable exterior turn/lift handle with a spring loaded ball detent shall be provided to open the cover and the latch release shall be protected by a flush, gasketed, removable screw plug.

J. Hardware:

1. Hinges: Heavy forged Type 316 stainless steel hinges, each having a minimum 1/4" (6mm) diameter Type 316 stainless steel pin, shall be provided and shall pivot so the covers do not protrude into the channel frame.
2. Cover shall be equipped with a hold open arm which automatically locks each cover in the open position.
3. Cover shall be fitted with the required number and size of compression spring operators. Springs and spring tubes shall be Type 316 stainless steel.
4. A Type 316 stainless steel snap lock with fixed handle shall be mounted on the underside of one cover.
5. Hardware: Shall be Type 316 stainless steel throughout.

K. Finishes: Factory finish shall be mill finish aluminum with bituminous coating applied to the exterior of the frame.

2.3 MATERIALS

A. Steel Plates, Shapes, and Bars: ASTM A 36/A 36M.

B. Steel Sheet: Uncoated or electrolytic zinc coated, ASTM A 879/A 879M, with cold-rolled steel sheet substrate complying with ASTM A 1008/A 1008M, Commercial Steel (CS), exposed.

C. Frame Anchors: Same type as door face.

D. Inserts, Bolts, and Anchor Fasteners: Hot-dip galvanized steel according to ASTM A 153/A 153M or ASTM F 2329.

2.4 FABRICATION

A. General: Provide access door and frame assemblies manufactured as integral units ready for installation.

B. Metal Surfaces: For metal surfaces exposed to view in the completed Work, provide materials with smooth, flat surfaces without blemishes. Do not use materials with exposed pitting, seam marks, roller marks, rolled trade names, or roughness.

C. Doors and Frames: Grind exposed welds smooth and flush with adjacent surfaces. Furnish attachment devices and fasteners of type required to secure access doors to types of supports indicated.

1. Provide mounting holes in frames for attachment of units to metal or wood framing.
2. Provide mounting holes in frame for attachment of masonry anchors.

D. Latching Mechanisms: Furnish number required to hold doors in flush, smooth plane when closed.

2.5 FINISHES

A. Protect mechanical finishes on exposed surfaces from damage by applying a strippable, temporary protective covering before shipping.

B. Steel and Metallic-Coated-Steel Finishes:

1. Factory Prime: Apply manufacturer's standard, fast-curing, lead- and chromate-free, universal primer immediately after surface preparation and pretreatment.

PART 3 - EXECUTION

3.1 EXAMINATION

A. Examine substrates for compliance with requirements for installation tolerances and other conditions affecting performance of the Work.

B. Proceed with installation only after unsatisfactory conditions have been corrected.

3.2 INSTALLATION

A. Comply with manufacturer's written instructions for installing access doors and frames.

B. Install doors flush with adjacent finish surfaces or recessed to receive finish material.

3.3 ADJUSTING

A. Adjust doors and hardware, after installation, for proper operation.

B. Remove and replace doors and frames that are warped, bowed, or otherwise damaged.

END OF SECTION 08 3113

SECTION 08 3323 - OVERHEAD COILING DOORS

PART 1 - GENERAL

1.1 RELATED DOCUMENTS

A. Drawings and general provisions of the Contract, including General and Supplementary Conditions and Division 01 Specification Sections, apply to this Section.

1.2 SUMMARY

A. Section Includes:

1. Insulated service doors.
2. Counter doors.

B. Related Sections:

1. Section 055000 "Metal Fabrications" for miscellaneous steel supports.
2. Section 064023 “Interior Architectural Woodwork” for solid surface counters.

1.3 PERFORMANCE REQUIREMENTS

A. Delegated Design: Design overhead coiling doors, including comprehensive engineering analysis by a qualified professional engineer, using performance requirements and design criteria indicated.

B. Structural Performance, Exterior Doors: Exterior overhead coiling doors shall withstand the wind loads, the effects of gravity loads, and loads and stresses within limits and under conditions indicated according to SEI/ASCE 7.

1. Wind Loads: Uniform pressure (velocity pressure) of 20 lbf/sq. ft., acting inward and outward.

a. Basic Wind Speed: 90 mph.
b. Exposure Category: C.

2. Deflection Limits: Design overhead coiling doors to withstand design wind load without evidencing permanent deformation or disengagement of door components.

C. Operability under Wind Load, Exterior Doors: Design overhead coiling doors to remain operable under design wind load, acting inward and outward.

D. Seismic Performance: Overhead coiling doors shall withstand the effects of earthquake motions determined according to SEI/ASCE 7.

1. The term "withstand" means "the unit will remain in place without separation of any parts from the device when subjected to the seismic forces specified."
2. Seismic Component Importance Factor: 1.0.

E. Operation Cycles: Provide overhead coiling door components and operators capable of operating for not less than number of cycles indicated for each door. One operation cycle is complete when a door is opened from the closed position to the fully open position and returned to the closed position.

1.4 ACTION SUBMITTALS

A. Product Data: For each type and size of overhead coiling door and accessory. Include the following:

1. Construction details, material descriptions, dimensions of individual components, profiles for slats, and finishes.
2. Rated capacities, operating characteristics, electrical characteristics, and furnished accessories.

B. Shop Drawings: For each installation and for special components not dimensioned or detailed in manufacturer's product data. Include plans, elevations, sections, details, and attachments to other work.

1. Detail equipment assemblies and indicate dimensions, weights, loads, required clearances, method of field assembly, components, and location and size of each field connection.
2. Show locations of replaceable fusible links.
3. Wiring Diagrams: For power, signal, and control wiring.

C. Samples for Initial Selection: Manufacturer's finish charts showing full range of colors and textures available for units with factory-applied finishes.

1. Include similar Samples of accessories involving color selection.

D. Samples for Verification: For each type of exposed finish required, prepared on Samples of size indicated below.

1. Curtain Slats: 12 inches long.
2. Bottom Bar: 6 inches long with sensor edge.
3. Guides: 6 inches long.
4. Brackets: 6 inches square.
5. Hood: 6 inches square.

E. Maintenance and Operating Manuals: Furnish complete manuals describing the materials, devices and procedures to be followed in operating and maintaining all coiling insulated service doors under this section. Include manufacturer's brochures and parts lists describing the actual materials used in the product

1.5 INFORMATIONAL SUBMITTALS

A. Qualification Data: For qualified Installer.

B. Seismic Qualification Certificates: For overhead coiling doors**,** accessories, and components, from manufacturer.

C. Delegated-Design Submittal: For overhead coiling doors indicated to comply with performance requirements and design criteria, including analysis data signed and sealed by the qualified professional engineer responsible for their preparation.

1. Detail fabrication and assembly of seismic restraints.
2. Summary of forces and loads on walls and jambs.

1.6 CLOSEOUT SUBMITTALS

A. Maintenance Data: For overhead coiling doors to include in maintenance manuals.

1.7 QUALITY ASSURANCE

A. Installer Qualifications: Manufacturer's authorized representative who is trained and approved for both installation and maintenance of units required for this Project.

B. Source Limitations: Obtain overhead coiling doors from single source from single manufacturer.

1. Obtain operators and controls from overhead coiling door manufacturer.

C. Electrical Components, Devices, and Accessories: Listed and labeled as defined in NFPA 70, by a qualified testing agency, and marked for intended location and application.

D. Regulatory Requirements: Comply with applicable provisions in the U.S. Architectural & Transportation Barriers Compliance Board's ADA-ABA Accessibility Guidelines.

1.8 APPLICABLE PUBLICATIONS

A. The publications listed below form a part of this specification to the extent referenced. The publications are referenced in the text by the basic designation only.

B. American Society for Testing and Materials

1.	A36/A36M-05	Structural Steel
2.	A167-99 (R2004)	Stainless and Heat-Resisting Chronium-Nickel Steel Plate, Sheet and Strip
3.	A653/A653m-07	Steel Sheet, Zinc-Coated (Galvanized) Zinc-Iron Alloy-Coated (Galvannealed) by the Hot-Dip process
4.	B209/209M-07	Aluminum and Aluminum-Alloy sheet and Plate
5.	B221/B221M-06 and Tubes	Aluminum-Alloy Extruded Bars, Rods, Wire, Shapes,

C. National Electrical Manufacturers Association (NEMA):

1.	ICS 1-00(R2005)	Industrial Control and Systems General Requirements
2.	ICS 2-00(R2005)	Industrial Control, and Systems, Controllers, Contractors, and Overload Relays
3.	ICS 6-93 (R2006)	Industrial Control and Systems Enclosures
4.	MG 1-06	Motors and Generators
5.	ST 20-92 (R1997)	Dry-Type Transformers for General Applications

D. Master Painters Institute (MPI):

1. MPI #35 Exterior Bituminous Coating
2. MPI #76 Quick Drying Alkyd Metal Primer

E. National Fire Protection Association (NFPA):

1. 70-07 National Electrical Code 1999 Edition
2. 80-06 Fire Doors and Fire Windows

F. National Association of Architectural Metal Manufacturers (NAAMM):

1. AMP 500 Series Metal Finishes Manual

G. Underwriters Library, Inc.

1. 2007 Fire Resistance Directory

PART 2 - PRODUCTS

2.1 DOOR CURTAIN MATERIALS AND CONSTRUCTION

A. Door Curtains: Fabricate overhead coiling-door curtain of interlocking metal slats, designed to withstand wind loading indicated, in a continuous length for width of door without splices. Unless otherwise indicated, provide slats of thickness and mechanical properties recommended by door manufacturer for performance, size, and type of door indicated, and as follows:

1. Steel Door Curtain Slats: Zinc-coated (galvanized), cold-rolled structural steel sheet; complying with ASTM A 653/A 653M, with G90 (Z275) zinc coating; nominal sheet thickness (coated) of 0.028 inch and as required to meet requirements.
2. Vision-Panel Glazing: Manufacturer's standard translucent glazing, fabricated from transparent acrylic sheet or fire-protection rated glass as required for type of door; set in glazing channel secured to curtain slats.
3. Insulation: Fill slats for insulated doors with manufacturer's standard thermal insulation complying with maximum flame-spread and smoke-developed indexes of 75 and 450, respectively, according to ASTM E 84. Enclose insulation completely within slat faces.
4. Metal Interior Curtain-Slat Facing: Match metal of exterior curtain-slat face.
5. Gasket Seal: Provide insulated slats with manufacturer's standard interior-to-exterior thermal break or with continuous gaskets between slats.

B. Endlocks and Windlocks for Service Doors: Malleable-iron casings galvanized after fabrication, secured to curtain slats with galvanized rivets or high-strength nylon. Provide locks on not less than alternate curtain slats for curtain alignment and resistance against lateral movement.

C. Endlocks for Counter Doors: Manufacturer's standard locks on not less than alternate curtain slats for curtain alignment and resistance against lateral movement.

D. Bottom Bar for Service Doors: Consisting of two angles, each not less than 1-1/2 by 1-1/2 by 1/8 inch thick; fabricated from manufacturer's standard hot-dip galvanized steel, stainless steel, or aluminum extrusions to match curtain slats and finish.

E. Bottom Bar for Counter Doors: Manufacturer's standard continuous channel or tubular shape, fabricated from manufacturer's standard hot-dip galvanized steel, stainless steel, or aluminum extrusions to match curtain slats and finish.

F. Astragal for Interior Doors: Equip each door bottom bar with a replaceable, adjustable, continuous, compressible gasket of flexible vinyl, rubber, or neoprene as a cushion bumper.

G. Curtain Jamb Guides: Manufacturer's standard angles or channels and angles of same material and finish as curtain slats unless otherwise indicated, with sufficient depth and strength to retain curtain, to allow curtain to operate smoothly, and to withstand loading. Slot bolt holes for guide adjustment. Provide removable stops on guides to prevent overtravel of curtain, and a continuous bar for holding windlocks.

2.2 HOOD

A. General: Form sheet metal hood to entirely enclose coiled curtain and operating mechanism at opening head. Contour to fit end brackets to which hood is attached. Roll and reinforce top and bottom edges for stiffness. Form closed ends for surface-mounted hoods and fascia for any portion of between-jamb mounting that projects beyond wall face. Equip hood with intermediate support brackets as required to prevent sagging.

1. Galvanized Steel: Nominal 0.028-inch- thick, hot-dip galvanized steel sheet with G90 (Z275) zinc coating, complying with ASTM A 653/A 653M.

2.3 LOCKING DEVICES

A. Slide Bolt: Fabricate with side-locking bolts to engage through slots in tracks for locking by padlock, located on both left and right jamb sides, operable from coil side.

B. Chain Lock Keeper: Suitable for padlock.

C. Safety Interlock Switch: Equip power-operated doors with safety interlock switch to disengage power supply when door is locked.

2.4 CURTAIN ACCESSORIES

A. Weatherseals: Equip each service door with weather-stripping gaskets fitted to entire perimeter of door for a weathertight installation, unless otherwise indicated.

1. At door head, use 1/8-inch- thick, replaceable, continuous sheet secured to inside of hood.
2. At door jambs, use replaceable, adjustable, continuous, flexible, 1/8-inch- thick seals of flexible vinyl, rubber, or neoprene.

B. Push/Pull Handles: Equip each push-up-operated or emergency-operated door with lifting handles on each side of door, finished to match door.

1. Provide pull-down straps or pole hooks for doors more than 84 inches high.

2.5 COUNTERBALANCING MECHANISM

A. General: Counterbalance doors by means of manufacturer's standard mechanism with an adjustable-tension, steel helical torsion spring mounted around a steel shaft and contained in a spring barrel connected to top of curtain with barrel rings. Use grease-sealed bearings or self-lubricating graphite bearings for rotating members.

B. Counterbalance Barrel: Fabricate spring barrel of manufacturer's standard hot-formed, structural-quality, welded or seamless carbon-steel pipe, of sufficient diameter and wall thickness to support rolled-up curtain without distortion of slats and to limit barrel deflection to not more than 0.03 in./ft. of span under full load.

C. Spring Balance: One or more oil-tempered, heat-treated steel helical torsion springs. Size springs to counterbalance weight of curtain, with uniform adjustment accessible from outside barrel. Secure ends of springs to barrel and shaft with cast-steel barrel plugs.

D. Torsion Rod for Counterbalance Shaft: Fabricate of manufacturer's standard cold-rolled steel, sized to hold fixed spring ends and carry torsional load.

E. Brackets: Manufacturer's standard mounting brackets of either cast iron or cold-rolled steel plate.

2.6 MANUAL DOOR OPERATORS

A. Equip door with manufacturer's recommended manual door operator unless another type of door operator is indicated.

B. Push-up Door Operation: Design counterbalance mechanism so required lift or pull for door operation does not exceed 25 lbf (111 N).

C. Chain-Hoist Operator: Consisting of endless steel hand chain, chain-pocket wheel and guard, and gear-reduction unit with a maximum 25 lbf force for door operation. Provide alloy-steel hand chain with chain holder secured to operator guide.

2.7 ELECTRIC DOOR OPERATORS

A. General: Electric door operator assembly of size and capacity recommended and provided by door manufacturer for door and operation-cycles requirement specified, with electric motor and factory-prewired motor controls, starter, gear-reduction unit, solenoid-operated brake, clutch, remote-control stations, control devices, integral gearing for locking door, and accessories required for proper operation.

1. Comply with NFPA 70.
2. Provide control equipment complying with NEMA ICS 1, NEMA ICS 2, and NEMA ICS 6, with NFPA 70 Class 2 control circuit, maximum 24 V, ac or dc.

B. Usage Classification: Electric operator and components capable of operating for not less than number of cycles per hour indicated for each door.

C. Door Operator Location(s): Operator location indicated for each door.

1. Electric Motor Operator: Coiling insulated service door shall be provided with a direct drive power unit model type ADF. The operator shall not utilize any drive chains between the door’s inner shaft and the motor operator, the drive shaft of the door shall run directly into the gearbox of the operator without the use of any drive chains or drive sprockets. High efficiency helical gearing running in an oil bath shall be furnished together with a rectifier-operated brake completely housed to protect against damage, dust, and moisture. An efficient overload protection device, which will break the power circuit, and protect against damage to the motor windings shall be integral with the unit. The motor

operator shall be designed to operate the door at an average speed of 6” per second. Operator is to be NEMA type 1 enclosure

a. Motor: shall be intermediate duty, thermally protected, ball bearing type with a class A or better insulation. Horsepower of motor is to be ¾ hp minimum or of manufacturer’s recommended size, whichever is greater.
b. Starter: shall be size “0” magnetic reversing starter, across the line type with mechanical and electrical interlocks, with 10 amp continuous rating and 24 volt control circuit.
c. Reducer: Heliacal gear type, 75% efficient minimum.
d. Brake: Magnetically activated, integral within the operator’s housing

D. Electric Motors: Comply with NEMA designation, temperature rating, service factor, enclosure type, and efficiency requirements specified in Section 110513 "Common Motor Requirements for Equipment" unless otherwise indicated.

1. Electrical Characteristics:

a. Phase: Single phase.
b. Volts: 208 V.
c. Hertz: 60.

2. Motor Type and Controller: Reversible motor and controller (disconnect switch) for motor exposure indicated.
3. Motor Size: Minimum size as indicated. If not indicated, large enough to start, accelerate, and operate door in either direction from any position, at a speed not less than 8 in./sec. and not more than 12 in./sec., without exceeding nameplate ratings or service factor.
4. Operating Controls, Controllers (Disconnect Switches), Wiring Devices, and Wiring: Manufacturer's standard unless otherwise indicated.
5. Coordinate wiring requirements and electrical characteristics of motors and other electrical devices with building electrical system and each location where installed.

E. Limit Switches: Equip each motorized door with adjustable switches interlocked with motor controls and set to automatically stop door at fully opened and fully closed positions.

F. Obstruction Detection Device: Equip motorized door with indicated external automatic safety sensor capable of protecting full width of door opening. For non-fire-rated doors, activation of device immediately stops and reverses downward door travel.

1. Sensor Edge: Automatic safety sensor edge, located within astragal or weather stripping mounted to bottom bar. Contact with sensor activates device. Connect to control circuit using manufacturer's standard take-up reel or self-coiling cable.

a. Self-Monitoring Type: Four-wire configured device designed to interface with door operator control circuit to detect damage to or disconnection of sensor edge.

G. Remote-Control Station: Momentary-contact, three-button control station with push-button controls labeled "Open," "Close," and "Stop."

1. Interior units, full-guarded, surface-mounted, heavy-duty type, with general-purpose NEMA ICS 6, Type 1 enclosure.
2. Exterior units, full-guarded, standard-duty, surface-mounted, weatherproof type, NEMA ICS 6, Type 4 enclosure, key operated.

H. Emergency Manual Operation: Equip each electrically powered door with capability for emergency manual operation. Design manual mechanism so required force for door operation does not exceed 25 lbf.

I. Emergency Operation Disconnect Device: Equip operator with hand-operated disconnect mechanism for automatically engaging manual operator and releasing brake for emergency manual operation while disconnecting motor without affecting timing of limit switch. Mount mechanism so it is accessible from floor level. Include interlock device to automatically prevent motor from operating when emergency operator is engaged.

J. Motor Removal: Design operator so motor may be removed without disturbing limit-switch adjustment and without affecting emergency manual operation.

K. Audible and Visual Signals: Audible alarm and visual indicator lights in compliance with regulatory requirements for accessibility.

2.8 DOOR ASSEMBLY – SERVICE DOORS

A. Insulated Service Door: Overhead coiling door formed with curtain of interlocking metal slats.

1. Manufacturers: Subject to compliance with requirements, provide product by one of the following:

a. McKeon Door Company (Basis of Design)
b. Overhead Door Corporation.
c. Raynor.
d. Wayne-Dalton Corp.
e. Cornell Ironworks

B. Model: IS3018-ADF-G as manufactured by McKeon Door Company

C. Operation Cycles: Not less than 50,000.

1. Include tamperproof cycle counter.

D. STC Rating: 26.

E. Curtain R-Value: 6.0 deg F x h x sq. ft./Btu.

F. Door Curtain Material: Galvanized steel.

G. Door Curtain Slats: Shall be assembled of interlocking galvanized steel slats. Slats shall have a combination of endlocks and windlocks locking each end of all alternate slats to act as a wearing surface, maintain slat alignment and retain the curtain in the guides under wind pressure. Curtain shall be formed of 18 gauge front and back panel slats. The void of the curtain slats shall be filled with foamed-in-place polyurethane insulation and the front and back panel slats must have a positive interlock. Slats with snap-in back panels are not acceptable.

1. Slats: Shall be of a cross section not less than 3” wide by 1” deep.
2. Vision Panels: Approximately 10- by 1-5/8-inch openings spaced approximately 2 inches apart and beginning 12 inches from end guides; in three rows of slats at height indicated on Drawings; installed with insulated vision-panel glazing.
3. Insulated-Slat Interior Facing: Metal.

H. Curtain Jamb Guides: Galvanized steel with exposed finish matching curtain slats. Provide continuous integral wear strips to prevent metal-to-metal contact and to minimize operational noise. Each guide assembly shall be fabricated of a minimum 4" x 4" steel support angle, a 2½" x 4" inner guide angle and a 4" x 4" outer guide angle. Guides shall be designed with integral windbars in order to engage and retain the curtain under heavy wind pressures. Provide neoprene weather seals extending the full height of both guides.

I. Bottom Bar: Shall consist of two (2) angles, each not less than 2" x 2" x 1/8" steel formed to fit slats.

J. Mounting Brackets: Fabricated of hot rolled 3/16" steel plate minimum, brackets shall be provided to house ends of the counterbalance barrel assembly

K. Hood: Match curtain material and finish. Shall be provided to entirely enclose curtain and counterbalance barrel assembly. Hood shall be fabricated 22 gauge galvanized steel and designed to match brackets. Top and bottom shall be bent and reinforced for stiffness. Provide internal neoprene air baffle to minimize air infiltration at the head

1. Shape: Square.
2. Mounting: Face of wall.

L. Counterbalance Assembly: Coiling insulated service door shall be counterbalanced by means of adjustable steel helical torsion springs attached to shaft enclosed in pipe with required mounting blocks or rings for attachment of curtain. Grease sealed bearings or self-lubricating graphite bearings shall be attached to the spring barrel which shall be fabricated of hot formed structural quality carbon steel seamless pipe

M. Locking Devices: Equip door with locking device assembly and chain lock keeper.

1. Locking Device Assembly: Single-jamb side locking bars, operable from inside with thumb turn.

N. Electric Door Operator: Coiling insulated service door shall be provided with a direct drive power unit model type ADF. The operator shall not utilize any drive chains between the door's inner shaft and the motor operator, the drive shaft of the door shall run directly into the gearbox of the operator without the use of any drive chains or drive sprockets. High efficiency helical gearing running in an oil bath shall be furnished together with a rectifier-operated brake completely housed to protect against damage, dust, and moisture. An efficient overload protection device, which will break the power circuit and protect against damage to the motor windings shall be integral with the unit. The motor operator shall be designed to operate the door at an average speed of 6" per second. Operator is to be NEMA type 1 enclosure.

1. Usage Classification: Standard duty, up to 60 cycles per hour.
2. Motor: Shall be intermediate duty, thermally protected, ball bearing type with a class A or better insulation. Horsepower of motor is to be ¾ hp minimum or of manufacturer's recommended size, whichever is greater.
3. Starter: Shall be size "0" magnetic reversing starter, across the line type with mechanical and electrical interlocks, with 10 amp continuous rating and 24 volt control circuit.
4. Reducer: Heliacal gear type, 75% efficiency minimum.
5. Brake: Magnetically activated, integral within the operator's housing.
6. Control Station: Provide surface mount push button control station marked open, close and stop
7. Operator Location: Manufacturers Standard.
8. Motor Exposure: Interior.
9. Emergency Manual Operation: Chain type.

10. Obstruction-Detection Device: The coiling insulated service door shall be designed with an obstruction sensing safety edge. In the event that the safety edge meets an obstruction during the normal closing operation, the coiling insulated service door shall stop, reverse and return to the open position

    a. Sensor Edge Bulb Color: Black.

11. Remote-Control Station: Interior.

O. Door Finish:

1. Baked-Enamel or Powder-Coated Finish: Color as selected by Architect from manufacturer's full range.
2. Interior Curtain-Slat Facing: Match finish of exterior curtain-slat face.
3. After completion of fabrication, clean all metal surfaces to remove dirt and chemically treat to provide for paint adhesion. Slats are to receive a prime coat finish of .2 mils of epoxy primer and .8 mils of polyester paint

2.9 DOOR ASSEMBLY – COUNTER DOORS

A. Insulated Counter Door: Overhead coiling door formed with curtain of interlocking metal slats.

1. Manufacturers: Subject to compliance with requirements, provide product by one of the following:

    a. McKeon Door Company (Basis of Design)
    b. Overhead Door Corporation.
    c. Raynor.
    d. Wayne-Dalton Corp.

B. Model: CS 3000-PP-PC as manufactured by McKeon Door Company

C. Operation Cycles: Not less than 50,000.

D. STC Rating: 26.

E. Curtain R-Value: 6.0 deg F x h x sq. ft./Btu.

F. Door Curtain Material: Galvanized steel.

G. Door Curtain Slats: Shall be assembled of interlocking galvanized steel slats. Slats shall have a combination of endlocks locking each end of all alternate slats to act as a wearing surface, maintain slat alignment. Curtain shall be formed of 18 gauge front and back panel slats. The void of the curtain slats shall be filled with foamed-in-place polyurethane insulation and the front and back panel slats must have a positive interlock. Slats with snap-in back panels are not acceptable.

1. Slats: Shall be of a cross section not less than 1 ½” wide by ½” deep.
2. Insulated-Slat Interior Facing: Metal.

H. Curtain Jamb Guides: Galvanized steel with exposed finish matching curtain slats. Provide continuous integral wear strips to prevent metal-to-metal contact and to minimize operational noise. Each guide assembly shall be fabricated of a minimum 1/8” steel support angles and

channels formed to a box type configuration. Provide neoprene weather seals extending the full height of both guides.

I. Bottom Bar: Shall consist of a single 11/2" x 11/2" x 1/8" steel formed to fit slats.

J. Mounting Brackets: Fabricated of hot rolled 1/8” steel plate minimum, brackets shall be provided to house ends of the counterbalance barrel assembly

K. Hood: Match curtain material and finish. Shall be provided to entirely enclose curtain and counterbalance barrel assembly. Hood shall be fabricated 22 gauge galvanized steel and designed to match brackets. Top and bottom shall be bent and reinforced for stiffness. Provide internal neoprene air baffle to minimize air infiltration at the head

1. Shape: Square.
2. Mounting: Face of wall.

L. Counterbalance Assembly: Coiling insulated service door shall be counterbalanced by means of adjustable steel helical torsion springs attached to shaft enclosed in pipe with required mounting blocks or rings for attachment of curtain. Grease sealed bearings or self-lubricating graphite bearings shall be attached to the spring barrel which shall be fabricated of hot formed structural quality carbon steel seamless pipe

M. Locking Devices: Equip door with locking device assembly and chain lock keeper.

1. Locking Device Assembly: Two-jamb slide locking bars, operable from inside with thumb turn.

N. Manual Operation: Counter shutter shall be designed so that it may be manually opened and closed. The counter shutter shall not require more than 35 pounds of operational force to move the shutter in either direction.

2.10 GENERAL FINISH REQUIREMENTS

A. Comply with NAAMM's "Metal Finishes Manual for Architectural and Metal Products" for recommendations for applying and designating finishes.

B. Appearance of Finished Work: Noticeable variations in same piece are not acceptable. Variations in appearance of adjoining components are acceptable if they are within the range of approved Samples and are assembled or installed to minimize contrast.

2.11 STEEL AND GALVANIZED-STEEL FINISHES

A. Baked-Enamel or Powder-Coat Finish: Manufacturer's standard baked-on finish consisting of prime coat and thermosetting topcoat. Comply with coating manufacturer's written instructions for cleaning, pretreatment, application, and minimum dry film thickness.

1. Baked-Enamel or Powder-Coated Finish: Color as selected by Architect from manufacturer's full range.
2. Interior Curtain-Slat Facing: Match finish of exterior curtain-slat face.
3. After completion of fabrication, clean all metal surfaces to remove dirt and chemically treat to provide for paint adhesion. Slats are to receive a prime coat finish of .2 mils of epoxy primer and .8 mils of polyester paint

PART 3 - EXECUTION

3.1 EXAMINATION

A. Examine substrates areas and conditions, with Installer present, for compliance with requirements for substrate construction and other conditions affecting performance of the Work.

B. Examine locations of electrical connections.

C. Proceed with installation only after unsatisfactory conditions have been corrected.

3.2 INSTALLATION

A. Install overhead coiling doors and operating equipment complete with necessary hardware, anchors, inserts, hangers, and equipment supports; according to manufacturer's written instructions and as specified.

B. Install overhead coiling doors, hoods, and operators at the mounting locations indicated for each door.

C. Accessibility: Install overhead coiling doors, switches, and controls along accessible routes in compliance with regulatory requirements for accessibility.

3.3 STARTUP SERVICE

A. Engage a factory-authorized service representative to perform startup service.

1. Perform installation and startup checks according to manufacturer's written instructions.
2. Test and adjust controls and safeties. Replace damaged and malfunctioning controls and equipment.

3.4 ADJUSTING

A. Adjust hardware and moving parts to function smoothly so that doors operate easily, free of warp, twist, or distortion.

B. Lubricate bearings and sliding parts as recommended by manufacturer.

C. Adjust seals to provide weathertight fit around entire perimeter.

3.5 DEMONSTRATION

A. Engage a factory-authorized service representative to train Owner's maintenance personnel to adjust, operate, and maintain overhead coiling doors.

END OF SECTION 08 3323

SECTION 083613 - SECTIONAL DOORS

PART 1 - GENERAL

1.1 RELATED DOCUMENTS

A. Drawings and general provisions of the Contract, including General and Supplementary Conditions and Division 01 Specification Sections, apply to this Section.

1.2 SUMMARY

A. Section includes electrically operated sectional doors.

B. Related Requirements:

1. Section 055000 "Metal Fabrications" for miscellaneous steel supports.

1.3 ACTION SUBMITTALS

A. Product Data: For each type and size of sectional door and accessory.

1. Include construction details, material descriptions, dimensions of individual components, profile door sections, and finishes.
2. Include rated capacities, operating characteristics, electrical characteristics, and furnished accessories.

B. Shop Drawings: For each installation and for special components not dimensioned or detailed in manufacturer's product data.

1. Include plans, elevations, sections, and mounting details.
2. Include details of equipment assemblies. Indicate dimensions, required clearances, method of field assembly, components, and location and size of each field connection.
3. Include points of attachment and their corresponding static and dynamic loads imposed on structure.
4. Include diagrams for power, signal, and control wiring.

C. Samples for Initial Selection: For units with factory-applied finishes.

1. Include Samples of accessories involving color selection.

1.4 INFORMATIONAL SUBMITTALS

A. Qualification Data: For Installer.

1.5 CLOSEOUT SUBMITTALS

A. Maintenance Data: For sectional doors to include in maintenance manuals.

1.6 QUALITY ASSURANCE

A. Installer Qualifications: An entity that employs installers and supervisors who are trained and approved by manufacturer for both installation and maintenance of units required for this Project.

1.7 WARRANTY

A. Special Warranty: Manufacturer agrees to repair or replace components of sectional doors that fail in materials or workmanship within specified warranty period.

1. Failures include, but are not limited to, the following:

a. Structural failures including, but not limited to, excessive deflection.
b. Failure of components or operators before reaching required number of operation cycles.
c. Faulty operation of hardware.
d. Deterioration of metals, metal finishes, and other materials beyond normal weathering and use; rust through.
e. Delamination of exterior or interior facing materials.

2. Warranty Period: Five years from date of Substantial Completion.

B. Special Finish Warranty: Manufacturer agrees to repair or replace components that show evidence of deterioration of factory-applied finishes within specified warranty period.

1. Warranty Period: 10 years from date of Substantial Completion.

PART 2 - PRODUCTS

2.1 MANUFACTURERS, GENERAL

A. Source Limitations: Obtain sectional doors from single source from single manufacturer.

1. Obtain operators and controls from sectional door manufacturer.

2.2 DOOR ASSEMBLY

A. Operation Cycles: Door components and operators capable of operating for not less than 50,000. One operation cycle is complete when a door is opened from the closed position to the fully open position and returned to the closed position.

B. Air Infiltration: Maximum rate of 0.08 cfm/sq. ft. (0.406 L/s per sq. m) at 15 and 25 mph (24.1 and 40.2 km/h) when tested according to ASTM E 283.

C. R-Value: 17.5 deg F x h x sq. ft./Btu (3.082 K x sq. m/W).

D. Steel Sections: Zinc-coated (galvanized) steel sheet with G90 (Z275) zinc coating.

1. Section Thickness: 2 inches (51 mm) .
2. Exterior-Face, Steel Sheet Thickness: Insert dimension nominal coated thickness.

a. Surface: Manufacturer's standard, grooved .
3. Insulation: Foamed in place.
4. Interior Facing Material: Zinc-coated (galvanized) steel sheet with a nominal coated thickness of 0.019 inch (0.48 mm).

E. Track Configuration: High-lift track

F. Weatherseals: Fitted to bottom and top and around entire perimeter of door. Provide combination bottom weatherseal and sensor edge.

G. Windows: Size indicated on Drawings; installed with glazing of the following type:

1. Insulating Glass: Manufacturer's standard.

H. Roller-Tire Material: Manufacturer's standard.

I. Locking Devices: Equip door with slide bolt for padlock.

J. Counterbalance Type: Torsion spring.

K. Electric Door Operator:

1. Usage Classification: Heavy duty, 25 or more cycles per hour and more than 90 cycles per day.
2. Operator Type: Manufacturer's standard for door requirements.
3. Safety: Listed according to UL 325 by a qualified testing agency for commercial or industrial use**; moving parts of operator enclosed or guarded if exposed and mounted at** 8 feet (2.4 m) **or lower**.
4. Motor Exposure: Interior, clean, and dry.
5. Emergency Manual Operation: Push-up type.
6. Obstruction-Detection Device: Automatic electric sensor edge on bottom section.

a. Sensor Edge Bulb Color: Black.
7. Other Equipment:

L. Door Finish:

1. Baked-Enamel or Powder-Coat Finish: Color and gloss as selected by Architect from manufacturer's full range.
2. Finish of Interior Facing Material: Finish as selected by Architect from manufacturer's full range.

2.3 MATERIALS, GENERAL

A. Electrical Components, Devices, and Accessories: Listed and labeled as defined in NFPA 70, by a qualified testing agency, and marked for intended location and application.

2.4 STEEL DOOR SECTIONS

A. Exterior Section Faces and Frames: Zinc-coated (galvanized), cold-rolled, commercial steel (CS) sheet, complying with ASTM A 653/A 653M, with indicated zinc coating and thickness.

1. Fabricate section faces from single sheets to provide sections not more than 24 inches (610 mm) high and of indicated thickness. Roll horizontal meeting edges to a continuous, interlocking, keyed, rabbeted, shiplap, or tongue-in-groove weather-resistant seal, with a reinforcing flange return.
2. For insulated doors, provide sections with continuous thermal-break construction, separating the exterior and interior faces of door.

B. Section Ends and Intermediate Stiles: Enclose open ends of sections with channel end stiles formed from galvanized-steel sheet not less than 0.064-inch (1.63-mm) nominal coated thickness and welded to door section. Provide intermediate stiles formed from not less than 0.064-inch (1.63-mm) thick galvanized-steel sheet, cut to door section profile, and welded in place. Space stiles not more than 48 inches (1219 mm) apart.

C. Reinforce bottom section with a continuous channel or angle conforming to bottom-section profile.

D. Reinforce sections with continuous horizontal and diagonal reinforcement, as required to stiffen door and for wind loading. Provide galvanized-steel bars, struts, trusses, or strip steel, formed to depth and bolted or welded in place. Ensure that reinforcement does not obstruct vision lites.

E. Provide reinforcement for hardware attachment.

F. Foamed-in-Place Thermal Insulation: Insulate interior of steel sections with door manufacturer's standard CFC-free polyurethane insulation, foamed in place to completely fill interior of section and pressure bonded to face sheets to prevent delamination under wind load, and with maximum flame-spread and smoke-developed indexes of 75 and 450, respectively, according to ASTM E 84. Enclose insulation completely within steel sections and the interior facing material, with no exposed insulation.

G. Interior Facing Material: Zinc-coated (galvanized), cold-rolled, commercial steel (CS) sheet, complying with ASTM A 653/A 653M, with indicated thickness.

H. Fabricate sections so finished door assembly is rigid and aligned, with tight hairline joints and free of warp, twist, and deformation.

2.5 TRACKS, SUPPORTS, AND ACCESSORIES

A. Tracks: Manufacturer's standard, galvanized-steel track system of configuration indicated, sized for door size and weight, designed for lift type indicated and clearances indicated on Drawings, Provide complete system including brackets, bracing, and reinforcement to ensure rigid support of ball-bearing roller guides for required door type, size, weight, and loading.

1. Galvanized Steel: ASTM A 653/A 653M, minimum G60 (Z180) zinc coating.
2. Slope tracks at an angle from vertical or design tracks to ensure tight closure at jambs when door unit is closed.
3. Track Reinforcement and Supports: Galvanized-steel members to support track without sag, sway, and vibration during opening and closing of doors. Slot vertical sections of track spaced 2 inches (51 mm) apart for door-drop safety device.

    a. For Vertical Track: Continuous reinforcing angle from end of track, attached to track and supported at points by laterally braced attachments to overhead structural members.

B. Weatherseals: Replaceable, adjustable, continuous, compressible weather-stripping gaskets of flexible vinyl, rubber, or neoprene fitted to bottom and top of sectional door unless otherwise indicated.

C. Windows: Manufacturer's standard window units of type, size, and in arrangement indicated. Set glazing in vinyl, rubber, or neoprene glazing channel for metal-framed doors and elastic glazing compound for wood doors, as required. Provide removable stops of same material as door-section frames.

2.6 HARDWARE

A. General: Heavy-duty, corrosion-resistant hardware, with hot-dip galvanized, stainless-steel, or other corrosion-resistant fasteners, to suit door type.

B. Hinges: Heavy-duty, galvanized-steel hinges of not less than 0.079-inch (2.01-mm) nominal coated thickness at each end stile and at each intermediate stile, according to manufacturer's written recommendations for door size. Attach hinges to door sections through stiles and rails with bolts and lock nuts or lock washers and nuts. Use rivets or self-tapping fasteners where access to nuts is impossible. Provide double-end hinges where required, for doors more than 16 feet (4.88 m) wide unless otherwise recommended by door manufacturer.

C. Rollers: Heavy-duty rollers with steel ball-bearings in case-hardened steel races, mounted with varying projections to suit slope of track. Extend roller shaft through both hinges where double hinges are required. Provide 3-inch (76-mm) diameter roller tires for 3-inch (76-mm) wide track and 2-inch (51-mm) diameter roller tires for 2-inch (51-mm) wide track.

2.7 LOCKING DEVICES

A. Slide Bolt: Fabricate with side-locking bolts to engage through slots in tracks for locking by padlock, located on single-jamb side, operable from inside only.

B. Safety Interlock Switch: Equip power-operated doors with safety interlock switch to disengage power supply when door is locked.

2.8 COUNTERBALANCE MECHANISM

A. Torsion Spring: Counterbalance mechanism consisting of adjustable-tension torsion springs fabricated from steel-spring wire complying with ASTM A 229/A 229M, mounted on torsion shaft made of steel tube or solid steel. Provide springs designed for number of operation cycles indicated.

B. Cable Drums and Shaft for Doors: Cast-aluminum or gray-iron casting cable drums mounted on torsion shaft and grooved to receive door-lifting cables as door is raised. Mount counterbalance mechanism with manufacturer's standard ball-bearing brackets at each end of torsion shaft. Provide one additional midpoint bracket for shafts up to 16 feet (4.88 m) long and two additional brackets at one-third points to support shafts more than 16 feet (4.88 m) long unless closer spacing is recommended by door manufacturer.

C. Cables: Galvanized-steel, multi-strand, lifting cables with cable safety factor of at least 5 to 1.

D. Cable Safety Device: Include a spring-loaded steel or spring-loaded bronze cam mounted to bottom door roller assembly on each side and designed to automatically stop door if either lifting cable breaks.

E. Bracket: Provide anchor support bracket as required to connect stationary end of spring to the wall and to level the shaft and prevent sag.

F. Bumper: Provide spring bumper at each horizontal track to cushion door at end of opening operation.

2.9 ELECTRIC DOOR OPERATORS

A. General: Electric door operator assembly of size and capacity recommended and provided by door manufacturer for door and "operation cycles" requirement specified, with electric motor and factory-prewired motor controls, starter, gear-reduction unit, solenoid-operated brake, clutch, control stations, control devices, integral gearing for locking door, and accessories required for proper operation.

1. Comply with NFPA 70.
2. Control equipment complying with NEMA ICS 1, NEMA ICS 2, and NEMA ICS 6; with NFPA 70, Class 2 control circuit, maximum 24-V ac or dc.

B. Usage Classification: Electric operator and components capable of operating for not less than number of cycles per hour indicated for each door.

C. Door-Operator Type: Unit consisting of electric motor, gears, pulleys, belts, sprockets, chains, and controls needed to operate door and meet required usage classification.

D. Motors: Reversible-type motor with controller (disconnect switch) for motor exposure indicated.

1. Electrical Characteristics:

   a. Phase: Single phase.
   b. Volts: **115** V.
   c. Hertz: 60.

2. Motor Size: Minimum size as indicated. If not indicated, large enough to start, accelerate, and operate door in either direction from any position, at a speed not less than 8 in./sec. (203 mm/s) and not more than 12 in./sec.(305 mm/s), without exceeding nameplate ratings or service factor.
3. Operating Controls, Controllers (Disconnect Switches), Wiring Devices, and Wiring: Manufacturer's standard unless otherwise indicated.
4. Coordinate wiring requirements and electrical characteristics of motors and other electrical devices with building electrical system and each location where installed.
5. Use adjustable motor-mounting bases for belt-driven operators.

E. Limit Switches: Equip motorized door with adjustable switches interlocked with motor controls and set to automatically stop door at fully opened and fully closed positions.

F. Obstruction Detection Device: External entrapment protection consisting of indicated automatic safety sensor capable of protecting full width of door opening. Activation of device immediately stops and reverses downward door travel.

1. Electric Sensor Edge: Automatic safety sensor edge, located within astragal or weather stripping mounted to bottom section. Contact with sensor activates device. Connect to control circuit using manufacturer's standard take-up reel or self-coiling cable.

   a. Self-Monitoring Type: Four-wire configured device designed to interface with door-operator control circuit to detect damage to or disconnection of sensor edge.

G. Emergency Manual Operation: Equip electrically powered door with capability for emergency manual operation. Design manual mechanism so required force for door operation does not exceed 25 lbf (111 N).

H. Emergency Operation Disconnect Device: Equip operator with hand-operated disconnect mechanism for automatically engaging manual operator and releasing brake for emergency manual operation while disconnecting motor without affecting timing of limit switch. Mount mechanism so it is accessible from floor level. Include interlock device to automatically prevent motor from operating when emergency operator is engaged.

I. Motor Removal: Design operator so motor may be removed without disturbing limit-switch adjustment and without affecting emergency manual operation.

2.10 GENERAL FINISH REQUIREMENTS

A. Comply with NAAMM/NOMMA's "Metal Finishes Manual for Architectural and Metal Products (AMP 500-06)" for recommendations for applying and designating finishes.

B. Appearance of Finished Work: Noticeable variations in same piece are not acceptable. Variations in appearance of adjoining components are acceptable if they are within the range of approved Samples and are assembled or installed to minimize contrast.

2.11 STEEL AND GALVANIZED-STEEL FINISHES

A. Baked-Enamel or Powder-Coat Finish: Manufacturer's standard baked-on finish consisting of prime coat and thermosetting topcoat. Comply with coating manufacturer's written instructions for cleaning, pretreatment, application, and minimum dry film thickness.

PART 3 - EXECUTION

3.1 EXAMINATION

A. Examine substrates, areas, and conditions, with Installer present, for compliance with requirements for substrate construction and other conditions affecting performance of the Work.

B. Examine locations of electrical connections.

C. Proceed with installation only after unsatisfactory conditions have been corrected.

3.2 INSTALLATION

A. Install sectional doors and operating equipment complete with necessary hardware, anchors, inserts, hangers, and equipment supports; according to manufacturer's written instructions and as specified.

B. Tracks:

1. Fasten vertical track assembly to opening jambs and framing, spaced not more than 24 inches (610 mm) apart.
2. Hang vertical track assembly from structural overhead framing with angles or channel hangers attached to framing by welding or bolting, or both. Provide sway bracing, diagonal bracing, and reinforcement as required for rigid installation of track and door-operating equipment.

C. Accessibility: Install sectional doors, switches, and controls along accessible routes in compliance with regulatory requirements for accessibility.

D. Power-Operated Doors: Install automatic garage doors openers according to UL 325.

3.3 STARTUP SERVICES

A. Engage a factory-authorized service representative to perform startup service.

1. Complete installation and startup checks according to manufacturer's written instructions.
2. Test and adjust controls and safety devices. Replace damaged and malfunctioning controls and equipment.

3.4 ADJUSTING

A. Adjust hardware and moving parts to function smoothly so that doors operate easily, free of warp, twist, or distortion.

B. Lubricate bearings and sliding parts as recommended by manufacturer.

C. Adjust doors and seals to provide weather-resistant fit around entire perimeter.

D. Touch-up Painting: Immediately after welding galvanized materials, clean welds and abraded galvanized surfaces and repair galvanizing to comply with ASTM A 780/A 780M.

3.5 DEMONSTRATION

A. Engage a factory-authorized service representative to train Owner's maintenance personnel to adjust, operate, and maintain sectional doors.

END OF SECTION 083613

SECTION 08 4113 - ALUMINUM-FRAMED ENTRANCES AND STOREFRONTS

PART 1 - GENERAL

1.1 RELATED DOCUMENTS

A. Drawings and general provisions of the Contract, including General and Supplementary Conditions and Division 01 Specification Sections, apply to this Section.

1.2 SUMMARY

A. Section Includes:

1. Exterior and Interior storefront framing.
2. Interior manual-swing entrance doors and door-frame units.

1.3 DEFINITIONS

A. ADA/ABA Accessibility Guidelines: U.S. Architectural & Transportation Barriers Compliance Board's "Americans with Disability Act (ADA) and Architectural Barriers Act (ABA) Accessibility Guidelines for Buildings and Facilities."

1.4 PERFORMANCE REQUIREMENTS

A. General Performance: Aluminum-framed systems shall withstand the effects of the following performance requirements without exceeding performance criteria or failure due to defective manufacture, fabrication, installation, or other defects in construction:

1. Movements of supporting structure indicated on Drawings including, but not limited to, story drift and deflection from uniformly distributed and concentrated live loads.
2. Dimensional tolerances of building frame and other adjacent construction.
3. Failure includes the following:

a. Deflection exceeding specified limits.
b. Thermal stresses transferring to building structure.
c. Framing members transferring stresses, including those caused by thermal and structural movements to glazing.
d. Noise or vibration created by wind and by thermal and structural movements.
e. Loosening or weakening of fasteners, attachments, and other components.
f. Sealant failure.
g. Failure of operating units.

B. Delegated Design: Design aluminum-framed systems, including comprehensive engineering analysis by a qualified professional engineer, using performance requirements and design criteria indicated.

C. Structural Loads:

1. Wind Loads: As indicated on Drawings.

D. Deflection of Framing Members:

1. Deflection Normal to Wall Plane: Limited to 1/175 of clear span for spans up to 13 feet 6 inches and to 1/240 of clear span plus 1/4 inch for spans greater than 13 feet 6 inches or

an amount that restricts edge deflection of individual glazing lites to 3/4 inch, whichever is less.

2. Deflection Parallel to Glazing Plane: Limited to L/360 of clear span or 1/8 inch, whichever is smaller.

E. Structural-Test Performance: Provide aluminum-framed systems tested according to ASTM E 330 as follows:

1. When tested at positive and negative wind-load design pressures, systems do not evidence deflection exceeding specified limits.
2. When tested at 150 percent of positive and negative wind-load design pressures, systems, including anchorage, do not evidence material failures, structural distress, and permanent deformation of main framing members exceeding 0.2 percent of span.
3. Test Durations: As required by design wind velocity, but not fewer than 10 seconds.

F. Air Infiltration: Provide aluminum-framed systems with maximum air leakage through fixed glazing and framing areas of 0.06 cfm/sq. ft. of fixed wall area when tested according to ASTM E 283 at a minimum static-air-pressure difference of 6.24 lbf/sq. ft..

G. Water Penetration under Static Pressure: Provide aluminum-framed systems that do not evidence water penetration through fixed glazing and framing areas when tested according to ASTM E 331 at a minimum static-air-pressure difference of 20 percent of positive wind-load design pressure, but not less than 6.24 lbf/sq. ft..

H. Water Penetration under Dynamic Pressure: Provide aluminum-framed systems that do not evidence water leakage through fixed glazing and framing areas when tested according to AAMA 501.1 under dynamic pressure equal to 20 percent of positive wind-load design pressure, but not less than 6.24 lbf/sq. ft..

1. Maximum Water Leakage: No uncontrolled water penetrating aluminum-framed systems or water appearing on systems' normally exposed interior surfaces from sources other than condensation. Water leakage does not include water controlled by flashing and gutters that is drained to exterior and water that cannot damage adjacent materials or finishes.

I. Thermal Movements: Provide aluminum-framed systems that allow for thermal movements resulting from the following maximum change (range) in ambient and surface temperatures. Base engineering calculation on surface temperatures of materials due to both solar heat gain and nighttime-sky heat loss.

1. Temperature Change (Range): 120 deg F, ambient; 180 deg F, material surfaces.
2. Test Performance: No buckling; stress on glass; sealant failure; excess stress on framing, anchors, and fasteners; or reduction of performance when tested according to AAMA 501.5.

a. High Exterior Ambient-Air Temperature: That which produces an exterior metal-surface temperature of 180 deg F.
b. Low Exterior Ambient-Air Temperature: 0 deg F.

3. Interior Ambient-Air Temperature: 75 deg F.

J. Condensation Resistance: Provide aluminum-framed systems with fixed glazing and framing areas having condensation-resistance factor (CRF) of not less than 53 when tested according to AAMA 1503.

K. Thermal Conductance: Provide aluminum-framed systems with fixed glazing and framing areas having an average U-factor of not more than 0.57 Btu/sq. ft. x h x deg F when tested according to AAMA 1503.

L. Sound Transmission: Provide aluminum-framed systems with fixed glazing and framing areas having the following sound-transmission characteristics:

1. Sound Transmission Class (STC): Minimum 35 STC when tested for laboratory sound transmission loss according to ASTM E 90 and determined by ASTM E 413.

1.5 SUBMITTALS

A. Product Data: For each type of product indicated. Include construction details, material descriptions, dimensions of individual components and profiles, and finishes for aluminum-framed systems.

B. Shop Drawings: For aluminum-framed systems. Include plans, elevations, sections, details, and attachments to other work.

1. Include details of provisions for system expansion and contraction and for drainage of moisture in the system to the exterior.
2. For entrance doors, include hardware schedule and indicate operating hardware types, functions, quantities, and locations.

C. Samples for Initial Selection: For units with factory-applied color finishes.

D. Delegated-Design Submittal: For aluminum-framed systems indicated to comply with performance requirements and design criteria, including analysis data signed and sealed by the qualified professional engineer responsible for their preparation.

1. Detail fabrication and assembly of aluminum-framed systems.
2. Include design calculations.

E. Qualification Data: For qualified Installer.

F. Product Test Reports: Based on evaluation of comprehensive tests performed by a qualified testing agency, for aluminum-framed systems, indicating compliance with performance requirements.

G. Warranties: Sample of special warranties.

1.6 QUALITY ASSURANCE

A. Installer Qualifications: Manufacturer's authorized representative who is trained and approved for installation of units required for this Project.

B. Engineering Responsibility: Prepare data for aluminum-framed systems, including Shop Drawings, based on testing and engineering analysis of manufacturer's standard units in systems similar to those indicated for this Project.

C. Product Options: Information on Drawings and in Specifications establishes requirements for systems' aesthetic effects and performance characteristics. Aesthetic effects are indicated by dimensions, arrangements, alignment, and profiles of components and assemblies as they relate to sightlines, to one another, and to adjoining construction. Performance characteristics

are indicated by criteria subject to verification by one or more methods including preconstruction testing, field testing, and in-service performance.

1. Do not revise intended aesthetic effects, as judged solely by Architect, except with Architect's approval. If revisions are proposed, submit comprehensive explanatory data to Architect for review.

D. Accessible Entrances: Comply with applicable provisions in the U.S. Architectural & Transportation Barriers Compliance Board's ADA-ABA Accessibility Guidelines and ICC/ANSI A117.1.

E. Source Limitations for Aluminum-Framed Systems: Obtain from single source from single manufacturer.

F. Pre-installation Conference: Conduct conference at Project site.

1.7 PROJECT CONDITIONS

A. Field Measurements: Verify actual locations of structural supports for aluminum-framed systems by field measurements before fabrication and indicate measurements on Shop Drawings.

1.8 WARRANTY

A. Special Warranty: Manufacturer's standard form in which manufacturer agrees to repair or replace components of aluminum-framed systems that do not comply with requirements or that fail in materials or workmanship within specified warranty period.

1. Failures include, but are not limited to, the following:

a. Structural failures including, but not limited to, excessive deflection.
b. Noise or vibration caused by thermal movements.
c. Deterioration of metals, metal finishes, and other materials beyond normal weathering.
d. Water leakage through fixed glazing and framing areas.
e. Failure of operating components.

2. Warranty Period: Two years from date of Final Completion.

B. Special Finish Warranty: Manufacturer's standard form in which manufacturer agrees to repair or replace components on which finishes do not comply with requirements or that fail in materials or workmanship within specified warranty period. Warranty does not include normal weathering.

1. Warranty Period: 10 years from date of Final Completion.

1.9 MAINTENANCE SERVICE

A. Entrance Door Hardware:

1. Maintenance Tools and Instructions: Furnish a complete set of specialized tools and maintenance instructions as needed for Owner's continued adjustment, maintenance, and removal and replacement of entrance door hardware.

PART 2 - PRODUCTS

2.1 MANUFACTURERS

A. Manufacturers: Subject to compliance with requirements, provide products by one of the following:

1. EFCO Corporation.
2. Kawneer North America; an Alcoa company.
3. TRACO.
4. Tubelite.
5. United States Aluminum.
6. YKK AP America Inc.
7. Manko Window Systems, Inc.
8. Special Lite Mfg.
9. Arch Aluminum & Glass Co., Inc.

2.2 MATERIALS

A. Aluminum: Alloy and temper recommended by manufacturer for type of use and finish indicated.

1. Sheet and Plate: ASTM B 209.
2. Extruded Bars, Rods, Profiles, and Tubes: ASTM B 221.
3. Extruded Structural Pipe and Tubes: ASTM B 429.
4. Structural Profiles: ASTM B 308/B 308M.
5. Welding Rods and Bare Electrodes: AWS A5.10/A5.10M.

B. Steel Reinforcement: Manufacturer's standard zinc-rich, corrosion-resistant primer, complying with SSPC-PS Guide No. 12.00; applied immediately after surface preparation and pretreatment. Select surface preparation methods according to recommendations in SSPC-SP COM and prepare surfaces according to applicable SSPC standard.

1. Structural Shapes, Plates, and Bars: ASTM A 36/A 36M.
2. Cold-Rolled Sheet and Strip: ASTM A 1008/A 1008M.
3. Hot-Rolled Sheet and Strip: ASTM A 1011/A 1011M.

2.3 FRAMING SYSTEMS

A. Framing Members: Manufacturer's standard extruded-aluminum framing members of thickness required and reinforced as required to support imposed loads.

1. Construction: Full Thermally broken at exterior locations; non-thermally broken at interior locations.
2. Glazing System: Retained mechanically with gaskets on four sides.
3. Glazing Plane: Front.

B. Sheet Panning: Manufacturer’s standard sheet and plant aluminum, minimum .125 inch thickness.

C. Brackets and Reinforcements: Manufacturer's standard high-strength aluminum with nonstaining, nonferrous shims for aligning system components.

D. Fasteners and Accessories: Manufacturer's standard corrosion-resistant, nonstaining, nonbleeding fasteners and accessories compatible with adjacent materials.

1. Use self-locking devices where fasteners are subject to loosening or turning out from thermal and structural movements, wind loads, or vibration.
2. Reinforce members as required to receive fastener threads.

E. Concealed Flashing: Manufacturer's standard corrosion-resistant, nonstaining, nonbleeding flashing compatible with adjacent materials.

F. Framing System Gaskets and Sealants: Manufacturer's standard, recommended by manufacturer for joint type.

2.4 GLAZING SYSTEMS

A. Glazing: As specified in Division 08 Section "Glazing."

B. Glazing Gaskets: Manufacturer's standard compression types; replaceable, molded or extruded, of profile and hardness required to maintain watertight seal.

C. Spacers and Setting Blocks: Manufacturer's standard elastomeric type.

D. Bond-Breaker Tape: Manufacturer's standard TFE-fluorocarbon or polyethylene material to which sealants will not develop adhesion.

2.5 ENTRANCE DOOR SYSTEMS

A. Entrance Doors: Manufacturer's standard glazed entrance doors for manual-swing operation.

1. Door Construction: 2-inch overall thickness, with minimum 0.188-inch- thick, extruded-aluminum tubular rail and stile members. Mechanically fasten corners with reinforcing brackets that are deeply penetrated and fillet welded or that incorporate concealed tie rods.

a. Thermal Construction: High-performance plastic connectors separate aluminum members exposed to the exterior from members exposed to the interior.

2. Door Design: Wide stile; 5-inch nominal width.

a. Accessible Doors: Smooth surfaced for width of door in area within 12 inches above floor or ground plane.

3. Glazing Stops and Gaskets: Beveled, snap-on, extruded-aluminum stops and preformed gaskets.

a. Provide nonremovable glazing stops on outside of door.

B. Entrance Door Hardware: As specified in Division 08 Section "Door Hardware."

2.6 FIBERGLASS REINFORCED POLYESTER (FRP) DOORS

A. Entrance Doors: Manufacturer's standard flush FRP entrance doors for manual-swing operation.

1. Door Construction: 1-3/4 inch overall thickness, Special Lite Model SL-17 (.Basis of Design):

a. SpecLite3 fiberglass reinforced polyester (FRP) face sheets.

2. Door Design: Flush.
3. Stiles & Rails: Aluminum Alloy 6063-T5, Minimum of 2-5/16” depth.
4. Corners: Mitered.

5. Provide joinery of 3/8-inch diameter full-width tie rods through extruded splines top and bottom integral to standard tubular shaped stiles and rails reinforced to accept hardware as specified.
6. Securing Internal Door Extrusions: 3/16-inch angle blocks and locking hex nuts for joinery. Welds, glue, or other methods are not acceptable.
7. Furnish extruded stiles and rails with integral reglets to accept face sheets. Lock face sheets into place to permit flush appearance.
8. Rail caps or other face sheet capture methods are not acceptable.
9. Extrude top and bottom rail legs for interlocking continuous weather bar.
10. Meeting Stiles: Pile brush weatherseals. Extrude meeting stile to include integral pocket to accept pile brush weatherseals.
11. Bottom of Door: Install bottom weather bar with nylon brush weatherstripping into extruded interlocking edge of bottom rail.
12. Glue: Use of glue to bond sheet to core or extrusions is not acceptable.

B. Face Sheet:
1. Material: SpecLite 3 FRP, .120inch thickness, finish color throughout. Abuse resistant engineered surface.
2. Texture: Pebble.
3. Color: As selected by Architect from manufacturers full range.

C. Core:
1. Material: Poured in place polyurethane foam.
2. Denisty: Minimum of 5 pounds per cubic foot.
3. R-Value: Minimum of R-11.

D. Hardware:
1. Premachine doors in accordance with templates from specified hardware manufacturers and hardware schedule.

2.7 ACCESSORY MATERIALS

A. Joint Sealants: For installation at perimeter of aluminum-framed systems, as specified in Division 07 Section "Joint Sealants."

B. Bituminous Paint: Cold-applied, asphalt-mastic paint complying with SSPC-Paint 12 requirements except containing no asbestos; formulated for 30-mil thickness per coat.

C. Bent Plates to as detailed on drawings.
1. Match finish of adjacent aluminum frames.

2.8 FABRICATION

A. Form or extrude aluminum shapes before finishing.

B. Framing Members, General: Fabricate components that, when assembled, have the following characteristics:

1. Profiles that are sharp, straight, and free of defects or deformations.
2. Accurately fitted joints with ends coped or mitered.
3. Means to drain water passing joints, condensation within framing members, and moisture migrating within the system to exterior.
4. Physical and thermal isolation of glazing from framing members.
5. Accommodations for thermal and mechanical movements of glazing and framing to maintain required glazing edge clearances.
6. Provisions for field replacement of glazing from interior for vision glass and exterior for spandrel glazing or metal panels.
7. Fasteners, anchors, and connection devices that are concealed from view to greatest extent possible.

C. Mechanically Glazed Framing Members: Fabricate for flush glazing without projecting stops.

D. Storefront Framing: Fabricate components for assembly using screw-spline system.

E. Entrance Door Frames: Reinforce as required to support loads imposed by door operation and for installing entrance door hardware.

1. At exterior doors, provide compression weather stripping at fixed stops.
2. At interior doors, provide silencers at stops to prevent metal-to-metal contact. Install three silencers on strike jamb of single-door frames and two silencers on head of frames for pairs of doors.

F. Entrance Doors: Reinforce doors as required for installing entrance door hardware.

1. At pairs of exterior doors, provide sliding-type weather stripping retained in adjustable strip and mortised into door edge.
2. At exterior doors, provide weather sweeps applied to door bottoms.

G. Entrance Door Hardware Installation: Factory install entrance door hardware to the greatest extent possible. Cut, drill, and tap for factory-installed entrance door hardware before applying finishes.

H. After fabrication, clearly mark components to identify their locations in Project according to Shop Drawings.

2.9 ALUMINUM FINISHES

A. Clear Anodic Finish: AAMA 611, AA-M12C22A41, Class I, 0.018 mm or thicker.

PART 3 - EXECUTION

3.1 EXAMINATION

A. Examine areas and conditions, with Installer present, for compliance with requirements for installation tolerances and other conditions affecting performance of the Work.

B. Proceed with installation only after unsatisfactory conditions have been corrected.

3.2 INSTALLATION

A. General:

1. Comply with manufacturer's written instructions.
2. Do not install damaged components.
3. Fit joints to produce hairline joints free of burrs and distortion.
4. Rigidly secure non-movement joints.
5. Install anchors with separators and isolators to prevent metal corrosion and electrolytic deterioration.
6. Seal joints watertight unless otherwise indicated.

B. Metal Protection:

1. Where aluminum will contact dissimilar metals, protect against galvanic action by painting contact surfaces with primer or applying sealant or tape, or by installing nonconductive spacers as recommended by manufacturer for this purpose.
2. Where aluminum will contact concrete or masonry, protect against corrosion by painting contact surfaces with bituminous paint.
3. Install components to drain water passing joints, condensation occurring within framing members, and moisture migrating within the system to exterior.

C. Set continuous sill members and flashing in full sealant bed as specified in Division 07 Section "Joint Sealants" to produce weather-tight installation.

D. Install components plumb and true in alignment with established lines and grades, and without warp or rack.

E. Install glazing as specified in Division 08 Section "Glazing."

F. Entrance Doors: Install doors to produce smooth operation and tight fit at contact points.

1. Exterior Doors: Install to produce weather-tight enclosure and tight fit at weather stripping.
2. Field-Installed Entrance Door Hardware: Install surface-mounted entrance door hardware according to entrance door hardware manufacturers' written instructions using concealed fasteners to greatest extent possible.

G. Install perimeter joint sealants as specified in Division 07 Section "Joint Sealants" to produce weather-tight installation.

3.3 ERECTION TOLERANCES

A. Install aluminum-framed systems to comply with the following maximum erection tolerances:

1. Location and Plane: Limit variation from true location and plane to 1/8 inch in 12 feet; 1/4 inch over total length.
2. Alignment:
   a. Where surfaces abut in line, limit offset from true alignment to 1/16 inch.
   b. Where surfaces meet at corners, limit offset from true alignment to 1/32 inch.

B. Diagonal Measurements: Limit difference between diagonal measurements to 1/8 inch.

3.4 FIELD QUALITY CONTROL

A. Repair or remove work if test results and inspections indicate that it does not comply with specified requirements.

B. Additional testing and inspecting, at Contractor's expense, will be performed to determine compliance of replaced or additional work with specified requirements.

C. Aluminum-framed assemblies will be considered defective if they do not pass tests and inspections.

3.5 ADJUSTING

A. Adjust operating entrance door hardware to function smoothly as recommended by manufacturer.
   1. For entrance doors accessible to people with disabilities, adjust closers to provide a 3-second closer sweep period for doors to move from a 70-degree open position to 3 inches from the latch, measured to the leading door edge.

END OF SECTION 08 4113

SECTION 08 4413 - GLAZED ALUMINUM CURTAIN WALLS

PART 1 - GENERAL

1.1 RELATED DOCUMENTS

A. Drawings and general provisions of the Contract, including General and Supplementary Conditions and Division 01 Specification Sections, apply to this Section.

1.2 SUMMARY

A. Section includes conventionally glazed aluminum curtain walls installed as stick assemblies.

B. Related Sections:

1. Division 07 Section "Joint Sealants" for installation of joint sealants installed with glazed aluminum curtain walls and for sealants to the extent not specified in this Section.

1.3 DEFINITIONS

A. ADA/ABA Accessibility Guidelines: U.S. Architectural & Transportation Barriers Compliance Board's "Americans with Disability Act (ADA) and Architectural Barriers Act (ABA) Accessibility Guidelines for Buildings and Facilities."

1.4 PERFORMANCE REQUIREMENTS

A. General Performance: Comply with performance requirements specified, as determined by preconstruction testing of glazed aluminum curtain walls representing those indicated for this Project without failure due to defective manufacture, fabrication, installation, or other defects in construction.

1. Glazed aluminum curtain walls shall withstand movements of supporting structure including, but not limited to, story drift, twist, column shortening, long-term creep, and deflection from uniformly distributed and concentrated live loads.
2. Failure also includes the following:

a. Thermal stresses transferring to building structure.
b. Glass breakage.
c. Noise or vibration created by wind and thermal and structural movements.
d. Loosening or weakening of fasteners, attachments, and other components.

B. Delegated Design: Design glazed aluminum curtain walls, including comprehensive engineering analysis by a qualified professional engineer, using performance requirements and design criteria indicated.

C. Structural Loads:

1. Wind Loads: As indicated on Drawings.

2. Blast Loads for Exterior Locations: Designed to meet UFC 4-010-01, dated October 8, 2003 including Change 1, dated January 22, 2007, including Appendix B-3.1, Standard 10:

    a. Applicable Explosive Weight: I.
    b. Conventional Standoff Distance: 45m (148 ft.).
    c. Location: Parking and Roadways without a Controlled Perimeter
    d. Building Category: Primary Gathering Building.

D. Structural-Test Performance: Test according to ASTM E 330 as follows:

1. When tested at positive and negative wind-load design pressures, assemblies do not evidence deflection exceeding specified limits.
2. When tested at 150 percent of positive and negative wind-load design pressures, assemblies, including anchorage, do not evidence material failures, structural distress, and permanent deformation of main framing members exceeding 0.2 percent of span.
3. Test Durations: As required by design wind velocity, but not less than 10 seconds.

E. Deflection of Framing Members: At design wind pressure, as follows:

1. Deflection Normal to Wall Plane: Limited to edge of glass in a direction perpendicular to glass plane not exceeding L/175 of the glass edge length for each individual glazing lite or an amount that restricts edge deflection of individual glazing lites to 3/4 inch (19 mm), whichever is less.
2. Deflection Parallel to Glazing Plane: Limited to L/360 of clear span or 1/8 inch (3.2 mm), whichever is smaller.
3. Cantilever Deflection: Where framing members overhang an anchor point, limit deflection to two times the length of cantilevered member, divided by 175.

F. Seismic Performance: Glazed aluminum curtain walls shall withstand the effects of earthquake motions determined according to SEI/ASCE 7.

1. Component Importance Factor is 1.5.

G. Water Penetration under Static Pressure: No evidence of water penetration through fixed glazing and framing areas when tested according to ASTM E 331 at a minimum static-air-pressure differential of 20 percent of positive wind-load design pressure, but not less than 10 lbf/sq. ft. (480 Pa).

H. Thermal Movements: Allow for thermal movements resulting from the following maximum change (range) in ambient and surface temperatures:

1. Temperature Change (Range): 120 deg F (67 deg C), ambient; 180 deg F (100 deg C), material surfaces.
2. Test Interior Ambient-Air Temperature: 75 deg F (24 deg C).
3. Test Performance: No buckling; stress on glass; sealant failure; excess stress on framing, anchors, and fasteners; or reduction of performance when tested according to AAMA 501.5.

I. Energy Performance: Glazed aluminum curtain walls shall have certified and labeled energy performance ratings in accordance with NFRC.

1. Thermal Transmittance (U-factor): Fixed glazing and framing areas shall have U-factor of not more than 0.57 Btu/sq. ft. x h x deg F (3.23 W/sq. m x K) as determined according to NFRC 100.

2. Solar Heat Gain Coefficient: Fixed glazing and framing areas shall have a solar heat gain coefficient of no greater than 0.40 as determined according to NFRC 200.
3. Air Infiltration: Maximum air leakage through fixed glazing and framing areas of 0.30 cfm/sq. ft. (1.50 L/s per sq. m) of fixed wall area as determined according to ASTM E 283 at a minimum static-air-pressure differential of 6.24 lbf/sq. ft. (300 Pa).
4. Condensation Resistance: Fixed glazing and framing areas shall have an NFRC-certified condensation resistance rating of no less than 45 as determined according to NFRC 500.

1.5 PRECONSTRUCTION TESTING

A. Preconstruction Testing Service: Provide glazed aluminum curtain walls that comply with test-performance requirements indicated, as evidenced by reports of tests performed on manufacturer's standard assemblies by a qualified testing agency.

1.6 ACTION SUBMITTALS

A. Product Data: For each type of product indicated. Include construction details, material descriptions, dimensions of individual components and profiles, and finishes.

B. LEED Submittals:

1. Product Data for Credit IEQ 4.1: For glazing sealants used inside of the weatherproofing system, documentation including printed statement of VOC content.
2. Recycled Content – Credit MR 4.2: Provide documentation indicating percentages of post-consumer and pre-consumer recycled content by weight per unit of product or assembly containing the product. Indicate the percentage of the dollar of the recycled content compared to the total dollar value of the product or assembly containing the product.

C. Shop Drawings: For glazed aluminum curtain walls. Include plans, elevations, sections, full-size details, and attachments to other work.

1. Include details of provisions for assembly expansion and contraction and for draining moisture occurring within the assembly to the exterior.
2. Include full-size isometric details of each vertical-to-horizontal intersection of glazed aluminum curtain walls, showing the following:

    a. Joinery, including concealed welds.
    b. Anchorage.
    c. Expansion provisions.
    d. Glazing.
    e. Flashing and drainage.

3. Include laboratory mockup Shop Drawings, prepared by a qualified preconstruction testing agency, showing details of laboratory mockup.

    a. Resubmit Shop Drawings with changes made to glazed aluminum curtain walls to successfully complete preconstruction testing.

D. Samples for Initial Selection: For units with factory-applied color finishes.

E. Samples for Verification: For each type of exposed finish required, in manufacturer's standard sizes.

F. Fabrication Sample: Of each vertical-to-horizontal intersection of assemblies, made from 12-inch (300-mm) lengths of full-size components and showing details of the following:

1. Joinery, including concealed welds.
2. Anchorage.
3. Expansion provisions.
4. Glazing.
5. Flashing and drainage.

1.7 INFORMATIONAL SUBMITTALS

A. Qualification Data: For qualified Installer and preconstruction testing agency.

B. Seismic Qualification Certificates: For glazed aluminum curtain walls, accessories, and components, from manufacturer.

1. Basis for Certification: Indicate whether withstand certification is based on actual test of assembled components or on calculation.

C. Welding certificates.

D. Energy Performance Certificates: For glazed aluminum curtain walls, accessories, and components, from manufacturer.

1. Basis for Certification: NFRC-certified energy performance values for each glazed aluminum curtain wall.

E. Product Test Reports: Based on evaluation of comprehensive tests performed by a qualified preconstruction testing agency, for glazed aluminum curtain walls, indicating compliance with performance requirements.

F. Field quality-control reports.

G. Warranties: Sample of special warranties.

H. Delegated-Design Submittal: For glazed aluminum curtain walls indicated to comply with performance requirements and design criteria, including analysis data signed and sealed by the qualified professional engineer responsible for their preparation.

1.8 CLOSEOUT SUBMITTALS

A. Maintenance Data: For glazed aluminum curtain walls to include in maintenance manuals.

1.9 QUALITY ASSURANCE

A. Installer Qualifications: Manufacturer's authorized representative who is trained and approved for installation of units required for this Project.

B. Preconstruction Testing Agency Qualifications: Qualified according to ISO/IEC 17025 and accredited by ICC-ES for preconstruction testing indicated.

C. Product Options: Information on Drawings and in Specifications establishes requirements for aesthetic effects and performance characteristics of assemblies. Aesthetic effects are indicated by dimensions, arrangements, alignment, and profiles of components and assemblies as they relate to sightlines, to one another, and to adjoining construction.

1. Do not revise intended aesthetic effects, as judged solely by Architect, except with Architect's approval. If revisions are proposed, submit comprehensive explanatory data to Architect for review.

D. Welding Qualifications: Qualify procedures and personnel according to the following:

1. AWS D1.1/D1.1M, "Structural Welding Code - Steel."
2. AWS D1.2/D1.2M, "Structural Welding Code - Aluminum."

E. Energy Performance Standards: Comply with NFRC for minimum standards of energy performance, materials, components, accessories, and fabrication. Comply with more stringent requirements if indicated.

1. Provide NFRC-certified glazed aluminum curtain walls with an attached label.

F. Preinstallation Conference: Conduct conference at Project site.

1.10 PROJECT CONDITIONS

A. Field Measurements: Verify actual locations of structural supports for glazed aluminum curtain walls by field measurements before fabrication and indicate measurements on Shop Drawings.

1.11 WARRANTY

A. Special Assembly Warranty: Standard form in which manufacturer agrees to repair or replace components of glazed aluminum curtain walls that do not comply with requirements or that fail in materials or workmanship within specified warranty period.

1. Failures include, but are not limited to, the following:

a. Structural failures including, but not limited to, excessive deflection.
b. Noise or vibration created by wind and thermal and structural movements.
c. Deterioration of metals, and other materials beyond normal weathering.
d. Water penetration through fixed glazing and framing areas.
e. Failure of operating components.

2. Warranty Period: Two years from date of Final Completion.

B. Special Finish Warranty: Standard form in which manufacturer agrees to repair finishes or replace aluminum that shows evidence of deterioration of factory-applied finishes within specified warranty period.

1. Warranty Period: 10 years from date of Final Completion.

PART 2 - PRODUCTS

2.1 MANUFACTURERS

A. Product: Subject to compliance with requirements, provide or comparable product by one of the following:

1. EFCO Corporation.
2. Kawneer North America; an Alcoa company.
3. Manko Window Systems, Inc.; 250 Series and 275 Series. (Basis of Design).
4. United States Aluminum.

2.2 MATERIALS

A. Aluminum: Alloy and temper recommended by manufacturer for type of use and finish indicated.

1. Sheet and Plate: ASTM B 209 (ASTM B 209M).
2. Extruded Bars, Rods, Profiles, and Tubes: ASTM B 221 (ASTM B 221M).
3. Extruded Structural Pipe and Tubes: ASTM B 429.
4. Structural Profiles: ASTM B 308/B 308M.
5. Welding Rods and Bare Electrodes: AWS A5.10/A5.10M.

B. Steel Reinforcement: Manufacturer's standard zinc-rich, corrosion-resistant primer complying with SSPC-PS Guide No. 12.00; applied immediately after surface preparation and pretreatment. Select surface preparation methods according to recommendations in SSPC-SP COM and prepare surfaces according to applicable SSPC standard.

1. Structural Shapes, Plates, and Bars: ASTM A 36/A 36M.
2. Cold-Rolled Sheet and Strip: ASTM A 1008/A 1008M.
3. Hot-Rolled Sheet and Strip: ASTM A 1011/A 1011M.
4. Sheet and Plate: ASTM B 209 (ASTM B 209M).

2.3 FRAMING

A. Framing Members: Manufacturer's standard extruded- or formed-aluminum framing members of thickness required and reinforced as required to support imposed loads.

1. Construction: Thermally broken.
2. Glazing System: Retained mechanically with gaskets on four sides.
3. Glazing Plane: Front.

B. Sheet Panning: Manufacturer’s standard sheet and plant aluminum, minimum .125 inch thickness.

C. Brackets and Reinforcements: Manufacturer's standard high-strength aluminum with nonstaining, nonferrous shims for aligning system components.

D. Fasteners and Accessories: Manufacturer's standard corrosion-resistant, nonstaining, nonbleeding fasteners and accessories compatible with adjacent materials.

1. Use self-locking devices where fasteners are subject to loosening or turning out from thermal and structural movements, wind loads, or vibration.
2. Reinforce members as required to receive fastener threads.
3. Use exposed fasteners with countersunk Phillips screw heads, fabricated from 300 series stainless steel.

E. Anchors: Three-way adjustable anchors with minimum adjustment of 1 inch (25.4 mm) that accommodate fabrication and installation tolerances in material and finish compatible with adjoining materials and recommended by manufacturer.

1. Concrete and Masonry Inserts: Hot-dip galvanized cast-iron, malleable-iron, or steel inserts complying with ASTM A 123/A 123M or ASTM A 153/A 153M requirements.

F. Concealed Flashing: Dead-soft, 0.018-inch- (0.457-mm-) thick stainless steel, ASTM A 240/A 240M of type recommended by manufacturer.

G. Framing Sealants: Manufacturer's standard sealants.

2.4 GLAZING

A. Glazing: Comply with Division 08 Section "Glazing."

B. Glazing Sealants: As recommended by manufacturer.

1. Sealants used inside the weatherproofing system shall have a VOC content of 250 g/L or less when calculated according to 40 CFR 59, Subpart D (EPA Method 24).

2.5 ACCESSORY MATERIALS

A. Bituminous Paint: Cold-applied asphalt-mastic paint complying with SSPC-Paint 12 requirements except containing no asbestos, formulated for 30-mil (0.762-mm) thickness per coat.

2.6 FABRICATION

A. Form or extrude aluminum shapes before finishing.

B. Weld in concealed locations to greatest extent possible to minimize distortion or discoloration of finish. Remove weld spatter and welding oxides from exposed surfaces by descaling or grinding.

C. Fabricate components that, when assembled, have the following characteristics:

1. Profiles that are sharp, straight, and free of defects or deformations.
2. Accurately fitted joints with ends coped or mitered.
3. Physical and thermal isolation of glazing from framing members.
4. Accommodations for thermal and mechanical movements of glazing and framing to maintain required glazing edge clearances.
5. Provisions for field replacement of glazing from exterior.
6. Fasteners, anchors, and connection devices that are concealed from view to greatest extent possible.

D. Fabricate components that, when assembled, have the following characteristics:

1. Internal guttering system or other means to drain water passing joints, condensation occurring within framing members, and moisture migrating within glazed aluminum curtain wall to exterior.
2. Pressure-equalized system or double barrier design with primary air and vapor barrier at interior side of glazed aluminum curtain wall and secondary seal weeped and vented to exterior.

E. Curtain-Wall Framing: Fabricate components for assembly using shear-block system, screw-spline system, head-and-sill-receptor system with shear blocks at intermediate horizontal members or manufacturer's standard as required to comply with requirements specified.

F. After fabrication, clearly mark components to identify their locations in Project according to Shop Drawings.

2.7 ALUMINUM FINISHES

A. Clear Anodic Finish: AAMA 611, AA-M12C22A41, Class I, 0.018 mm or thicker.

PART 3 - EXECUTION

3.1 EXAMINATION

A. Examine areas, with Installer present, for compliance with requirements for installation tolerances and other conditions affecting performance of the Work.

B. Proceed with installation only after unsatisfactory conditions have been corrected.

3.2 INSTALLATION

A. General:

1. Comply with manufacturer's written instructions.
2. Do not install damaged components.
3. Fit joints to produce hairline joints free of burrs and distortion.
4. Rigidly secure nonmovement joints.
5. Install anchors with separators and isolators to prevent metal corrosion and electrolytic deterioration and to prevent impeding movement of moving joints.
6. Weld components in concealed locations to minimize distortion or discoloration of finish. Protect glazing surfaces from welding.
7. Seal joints watertight unless otherwise indicated.

B. Metal Protection:

1. Where aluminum will contact dissimilar metals, protect against galvanic action by painting contact surfaces with primer or by applying sealant or tape or installing nonconductive spacers as recommended by manufacturer for this purpose.
2. Where aluminum will contact concrete or masonry, protect against corrosion by painting contact surfaces with bituminous paint.

C. Install components to drain water passing joints, condensation occurring within framing members, and moisture migrating within glazed aluminum curtain wall to exterior.

D. Install components plumb and true in alignment with established lines and grades.

E. Install operable units level and plumb, securely anchored, and without distortion. Adjust weather-stripping contact and hardware movement to produce proper operation.

F. Install glazing as specified in Division 08 Section "Glazing."

3.3 ERECTION TOLERANCES

A. Erection Tolerances: Install glazed aluminum curtain walls to comply with the following maximum tolerances:

1. Plumb: 1/8 inch in 10 feet (3.2 mm in 3 m); 1/4 inch in 40 feet (6 mm in 12 m).
2. Level: 1/8 inch in 20 feet (3.2 mm in 6 m); 1/4 inch in 40 feet (6 mm in 12 m).
3. Alignment:

    a. Where surfaces abut in line or are separated by reveal or protruding element up to 1/2 inch (12.7 mm) wide, limit offset from true alignment to 1/16 inch (1.6 mm).
    b. Where surfaces are separated by reveal or protruding element from 1/2 to 1 inch (12.7 to 25.4 mm) wide, limit offset from true alignment to 1/8 inch (3.2 mm).
    c. Where surfaces are separated by reveal or protruding element of 1 inch (25.4 mm) wide or more, limit offset from true alignment to 1/4 inch (6 mm).

4. Location: Limit variation from plane to 1/8 inch in 12 feet (3.2 mm in 3.7 m); 1/2 inch (12.7 mm) over total length.

END OF SECTION 08 4413

SECTION 085653 - SECURITY WINDOWS

PART 1 - GENERAL

1.1 RELATED DOCUMENTS

A. Drawings and general provisions of the Contract, including General and Supplementary Conditions and Division 01 Specification Sections, apply to this Section.

1.2 SUMMARY

A. Section Includes:
1. Fixed, transaction security windows.

1.3 COORDINATION

A. Coordinate installation of anchorages for security windows. Furnish setting drawings, templates, and directions for installing anchorages, including sleeves, concrete inserts, anchor bolts, and items with integral anchors, that are to be embedded in adjacent construction. Deliver such items to Project site in time for installation.

1.4 PREINSTALLATION MEETINGS

A. Pre-installation Conference: Conduct Conference at Project Site.

1.5 INFORMATIONAL SUBMITTALS

A. Qualification Data: For qualified Installer and testing agency.

B. Sample Warranty: For special warranty.

1.6 QUALITY ASSURANCE

A. Installer Qualifications: An authorized representative who is trained and approved by manufacturer for installation and maintenance of units required for this Project.

1.7 DELIVERY, STORAGE, AND HANDLING

A. Pack security windows in wood crates for shipment. Crate glazing separate from frames unless factory glazed.

B. Label security window packaging with drawing designation.

C. Store crated security windows on raised blocks to prevent moisture damage.

1.8 FIELD CONDITIONS

Field Measurements: Verify actual dimensions of openings by field measurements before fabrication.

1.9 WARRANTY

A. All materials and workmanship shall be warranted against defects for a period of one (1) year from the substantial completion.

PART 2 - PRODUCTS

2.1 FIXED, TRANSACTION SECURITY WINDOWS

A. Provide fixed, framed transaction windows with operable sash or ventilator capable of allowing transfer of currency and documents:

1. Reference:
   A. UNDERWRITERS LABORATORY UL 752 11th Edition dated Sept. 5, 2005 Standard for Bullet Resistant Equipment
   B. AMERICAN WELDING SOCIETY

2. Design:
   A. Frames shall be of the "non-ricochet type".
   B. The capturing barrier shall be UL LISTED BULLET RESISTANT COMPOSITE manufactured by Armortex. Ballistic protection level shall be UL level (Ballistic level 7). Frames shall have ballistic protection level equal to or greater than glazing. Units must be manufactured in strict accordance with the specifications, design and details. No field alterations to construction of the units fabricated under acceptable standards is allowed unless approved by the manufacturer and the architect.
   C. All welds shall be in accordance with the requirements and standard practices of the American Welding Society. All exposed welds shall be ground flush and finished smooth. Standard manufacturing tolerances shall be +/- 1/16" for frame opening, diagonal dimensions of frame, overall frame width, height, depth, etc. Aluminum or aluminum clad units are not acceptable.

3. Basis-of-Design Product: Subject to compliance with requirements, provide **Armortex, Model SSTW-19, Bullet Resistant Three sided Natural Voice Window.**

2.2 FABRICATION

A. General: Fabricate security windows to provide a complete system for installation.

B. Frame: Three sided hollow metal "natural voice" frame modules shall be of a "non-ricochet type" design, constructed of brake formed commercial grade cold rolled 16 ga. steel and screw applied stops. (substitute 16 ga. #3 brushed stainless steel in lieu of 16 ga. cold rolled steel if required). Frame lined with UL LISTED BULLET RESISTANT ARMORTEX® COMPOSITE. Steel shall be free of scale, pitting, coil breaks and finish work shall be neat and free of defects. Corners shall be continuously welded the full length of the intersection. Knocked down and mechanical joints are unacceptable. Frame modules shall be capable of being joined with other frame modules to form a continuous hard line. Replacement of glazing shall be from the secure side of the window or wall unit and will not require the removal of the frame from the opening.

C. Shelf: Provide a shelf not less than 2" thick with a recessed dip tray. The shelf to be full width of window and a minimum of 12" deep centered under the glazing covered with a black high pressure laminate.

D. Dip Tray: Model RMDT1016 constructed of 16 ga. stainless steel, # 3 finish 10" x 16" from the outside edge of flanges with a clear open depth under the glazing of 1 5/8".

E. Finish: Prime painted gray factory applied on cold rolled steel. (painting not required if stainless steel finish frames are specified). Field paint and finish in accordance with and as directed in the finish section specifications 09 00 00.

F. Glazing: The glazing must be UL Listed Level (specify Ballistic level) Laminated Glass or Glass/Polycarbonate Composite or Glass Clad Polycarbonate or Multi-ply Polycarbonate or Acrylic Polycarbonate Composite or other type of glazing material specified in 08 80 00 Glazing section. Bottom edge of the glazing panel shall have a stainless steel cap of 18 ga. with a # 3 brushed finish.

PART 3 - EXECUTION

3.1 EXAMINATION

A. Examine substrates, areas, and conditions, with Installer present, for compliance with requirements for installation tolerances and other conditions affecting performance of security windows.

B. For the record, prepare written report, endorsed by Installer, listing conditions detrimental to performance of security windows.

C. For glazing materials whose orientation is critical for performance, verify installation orientation.

D. Proceed with installation only after unsatisfactory conditions have been corrected.

3.2 INSTALLATION

A. Set frames and glaze in accordance with manufacturer's instructions. Proper anchoring device shall be determined by the material to be anchored. Repair damaged units as directed (if approved by the manufacturer and the architect) prior to completion and the acceptance of the project. Or replace with new units as directed by the architect.

3.3 ADJUSTING

A. Remove and replace defective work, including security windows that are warped, bowed, or otherwise unacceptable.

3.4 CLEANING AND PROTECTION

A. Clean surfaces promptly after installation of security windows. Take care to avoid damaging the finish. Remove excess glazing and sealant compounds, dirt and other substances.
   1. Lubricate sliding security window hardware per Manufacturer Recommendations.

B. Clean glass of pre-glazed security windows promptly after installation.

C. Provide temporary protection to ensure that security windows are without damage at time of Substantial Completion.

END OF SECTION 085653

SECTION 087100 – DOOR HARDWARE

PART 1 - GENERAL

1.1 RELATED DOCUMENTS

A. Drawings and general provisions of the Contract, including General and Supplementary Conditions and Division 1 Specification Sections, apply to this Section.

1.2 SUMMARY

A. This Section includes commercial door hardware for the following:

1. Swinging doors.
2. Other doors to the extent indicated.
3. Sliding Window.

B. Door hardware includes, but is not necessarily limited to, the following:

1. Mechanical door hardware.
2. Electromechanical door hardware, power supplies, back-ups and surge protection.
3. Automatic operators.
4. Cylinders specified for doors in other sections.

C. Related Sections:

1. Division 08 Section “Door Hardware Schedule”.
2. Division 08 Section “Hollow Metal Doors and Frames”.
3. Division 08 Section “Interior Aluminum Doors and Frames”.
4. Division 08 Section “Flush Wood Doors”.
5. Division 08 Section “Automatic Door Operators”.
6. Division 08 Section “Access Control Hardware”.

D. Codes and References: Comply with the version year adopted by the Authority Having Jurisdiction.

1. ANSI A117.1 - Accessible and Usable Buildings and Facilities.
2. ICC/IBC - International Building Code.
3. NFPA 80 - Fire Doors and Windows.
4. NFPA 101 - Life Safety Code.
5. NFPA 105 - Installation of Smoke Door Assemblies.
6. UL/ULC and CSA C22.2 – Standards for Automatic Door Operators Used on Fire and Smoke Barrier Doors and Systems of Doors.
7. State Building Codes, Local Amendments.

E. Standards: All hardware specified herein shall comply with the following industry standards:

1. ANSI/BHMA Certified Product Standards - A156 Series
2. UL10C – Positive Pressure Fire Tests of Door Assemblies

1.3 SUBMITTALS

A. Product Data: Manufacturer's product data sheets including installation details, material descriptions, dimensions of individual components and profiles, operational descriptions and finishes.

B. Door Hardware Schedule: Prepared by or under the supervision of supplier, detailing fabrication and assembly of door hardware, as well as procedures and diagrams. Coordinate the final Door Hardware Schedule with doors, frames, and related work to ensure proper size, thickness, hand, function, and finish of door hardware.

1. Format: Comply with scheduling sequence and vertical format in DHI's "Sequence and Format for the Hardware Schedule."

2. Organization: Organize the Door Hardware Schedule into door hardware sets indicating complete designations of every item required for each door or opening. Organize door hardware sets in same order as in the Door Hardware Sets at the end of Part 3. Submittals that do not follow the same format and order as the Door Hardware Sets will be rejected and subject to resubmission.

3. Content: Include the following information:

a. Type, style, function, size, label, hand, and finish of each door hardware item.
b. Manufacturer of each item.
c. Fastenings and other pertinent information.
d. Location of door hardware set, cross-referenced to Drawings, both on floor plans and in door and frame schedule.
e. Explanation of abbreviations, symbols, and codes contained in schedule.
f. Mounting locations for door hardware.
g. Door and frame sizes and materials.

4. Submittal Sequence: Submit the final Door Hardware Schedule at earliest possible date, particularly where approval of the Door Hardware Schedule must precede fabrication of other work that is critical in the Project construction schedule. Include Product Data, Samples, Shop Drawings of other work affected by door hardware, and other information essential to the coordinated review of the Door Hardware Schedule.

C. Shop Drawings: Details of electrified access control hardware indicating the following:

1. Wiring Diagrams: Upon receipt of approved schedules, submit detailed system wiring diagrams for power, signaling, monitoring, communication, and control of the access control system electrified hardware. Differentiate between manufacturer-installed and field-installed wiring. Include the following:

a. Elevation diagram of each unique access controlled opening showing location and interconnection of major system components with respect to their placement in the respective door openings.
b. Complete (risers, point-to-point) access control system block wiring diagrams.

2. Electrical Coordination: Coordinate with related Division 26 Electrical Sections the voltages and wiring details required at electrically controlled and operated hardware openings.

D. Keying Schedule: Prepared under the supervision of the Owner, separate schedule detailing final keying instructions for locksets and cylinders in writing. Include keying system explanation,

door numbers, key set symbols, hardware set numbers and special instructions. Owner to approve submitted keying schedule prior to the ordering of permanent cylinders.

E. Operating and Maintenance Manuals: Provide manufacturers operating and maintenance manuals for each item comprising the complete door hardware installation in quantity as required in Division 01, Closeout Submittals. The manual to include the name, address, and contact information of the manufacturers providing the hardware and their nearest service representatives. The final copies delivered after completion of the installation test to include "as built" modifications made during installation, checkout, and acceptance.

F. Warranties and Maintenance: Special warranties and maintenance agreements specified in this Section.

1.4 QUALITY ASSURANCE

A. Manufacturers Qualifications: Engage qualified manufacturers with a minimum 5 years of documented experience in producing hardware and equipment similar to that indicated for this Project and that have a proven record of successful in-service performance.

B. Installer Qualifications: Installers, trained by the primary product manufacturers, with a minimum 3 years documented experience installing both standard and electrified builders hardware similar in material, design, and extent to that indicated for this Project and whose work has resulted in construction with a record of successful in-service performance.

C. Door Hardware Supplier Qualifications: Experienced commercial door hardware distributors with a minimum 5 years documented experience supplying both mechanical and electromechanical hardware installations comparable in material, design, and extent to that indicated for this Project. Supplier recognized as a factory direct distributor in good standing by the manufacturers of the primary materials with a warehousing facility in Project's vicinity. Supplier to have on staff a certified Architectural Hardware Consultant (AHC) available during the course of the Work to consult with Contractor, Architect, and Owner concerning both standard and electromechanical door hardware and keying.

1. Scheduling Responsibility: Preparation of door hardware and keying schedules.

D. Automatic Operator Supplier Qualifications: Power operator products and accessories are required to be supplied and installed through current members of the manufacturer's "Power Operator Preferred Installer" program. Suppliers are to be factory trained, certified, and a direct purchaser of the specified power operators and be responsible for the installation and maintenance of the units and accessories indicated for the Project.

E. Source Limitations: Obtain each type and variety of Door Hardware specified in this Section from a single source, qualified supplier unless otherwise indicated.

1. Electrified modifications or enhancements made to a source manufacturer's product line by a secondary or third party source will not be accepted.

2. Provide electromechanical door hardware from the same manufacturer as mechanical door hardware, unless otherwise indicated.

F. Regulatory Requirements: Comply with NFPA 70, NFPA 80, NFPA 101 and ANSI A117.1 requirements and guidelines as directed in the model building code including, but not limited to, the following:

1. NFPA 70 "National Electrical Code", including electrical components, devices, and accessories listed and labeled as defined in Article 100 by a testing agency acceptable to authorities having jurisdiction, and marked for intended use.

2. Where indicated to comply with accessibility requirements, comply with Americans with Disabilities Act (ADA), "Accessibility Guidelines for Buildings and Facilities (ADAAG)," ANSI A117.1 as follows:

    a. Handles, Pulls, Latches, Locks, and other Operating Devices: Shape that is easy to grasp with one hand and does not require tight grasping, tight pinching, or twisting of the wrist.
    b. Door Closers: Comply with the following maximum opening-force requirements indicated:

        1) Interior Hinged Doors: 5 lbf applied perpendicular to door.
        2) Fire Doors: Minimum opening force allowable by authorities having jurisdiction.

    c. Thresholds: Not more than 1/2 inch high. Bevel raised thresholds with a slope of not more than 1:2.

3. NFPA 101: Comply with the following for means of egress doors:

    a. Latches, Locks, and Exit Devices: Not more than 15 lbf to release the latch. Locks shall not require the use of a key, tool, or special knowledge for operation.

    b. Thresholds: Not more than 1/2 inch high.

4. Fire-Rated Door Assemblies: Provide door hardware for assemblies complying with NFPA 80 that are listed and labeled by a testing and inspecting agency acceptable to authorities having jurisdiction, for fire ratings indicated, based on testing according to NFPA 252 (neutral pressure at 40" above sill) or UL-10C.

    a. Test Pressure: Positive pressure labeling.

G. Each unit to bear third party permanent label demonstrating compliance with the referenced standards.

H. Pre-Submittal Conference: Conduct coordination conference in compliance with requirements in Division 01 Section "Project Meetings" with attendance by representatives of Supplier(s), Installer(s), and Contractor(s) to review proper methods and the procedures for receiving, handling, and installing door hardware.

1. Prior to installation of door hardware, conduct a project specific training meeting to instruct the installing contractors' personnel on the proper installation and adjustment of their respective products. Product training to be attended by installers of door hardware (including electromechanical hardware) for aluminum, hollow metal and wood doors. Training will include the use of installation manuals, hardware schedules, templates and physical product samples as required.
2. Inspect and discuss electrical roughing-in, power supply connections, and other preparatory work performed by other trades.
3. Review sequence of operation narratives for each unique access controlled opening.
4. Review and finalize construction schedule and verify availability of materials.
5. Review the required inspecting, testing, commissioning, and demonstration procedures

I. At completion of installation, provide written documentation that components were applied to manufacturer's instructions and recommendations and according to approved schedule.

1.5 DELIVERY, STORAGE, AND HANDLING

A. Inventory door hardware on receipt and provide secure lock-up and shelving for door hardware delivered to Project site. Do not store electronic access control hardware, software or accessories at Project site without prior authorization.

B. Tag each item or package separately with identification related to the final Door Hardware Schedule, and include basic installation instructions with each item or package.

C. Deliver, as applicable, permanent keys, cylinders, cores, access control credentials, software and related accessories directly to Owner via registered mail or overnight package service. Instructions for delivery to the Owner shall be established at the "Keying Conference".

1.6 COORDINATION

A. Templates: Obtain and distribute to the parties involved templates for doors, frames, and other work specified to be factory prepared for installing standard and electrified hardware. Check Shop Drawings of other work to confirm that adequate provisions are made for locating and installing hardware to comply with indicated requirements.

B. Door Hardware and Electrical Connections: Coordinate the layout and installation of scheduled electrified door hardware and related access control equipment with required connections to source power junction boxes, low voltage power supplies, detection and monitoring hardware, and fire and detection alarm systems.

C. Door and Frame Preparation: Related Division 08 Sections (Steel, Aluminum and Wood) doors and corresponding frames are to be prepared, reinforced and pre-wired (if applicable) to receive the installation of the specified electrified, monitoring, signaling and access control system hardware without additional in-field modifications.

1.7 WARRANTY

A. General Warranty: Reference Division 01, General Requirements. Special warranties specified in this Article shall not deprive Owner of other rights Owner may have under other provisions of the Contract Documents and shall be in addition to, and run concurrent with, other warranties made by Contractor under requirements of the Contract Documents.

B. Warranty Period: Written warranty, executed by manufacturer(s), agreeing to repair or replace components of standard and electrified door hardware that fails in materials or workmanship within specified warranty period after final acceptance by the Owner. Failures include, but are not limited to, the following:

1. Structural failures including excessive deflection, cracking, or breakage.
2. Faulty operation of the hardware.
3. Deterioration of metals, metal finishes, and other materials beyond normal weathering.
4. Electrical component defects and failures within the systems operation.

C. Standard Warranty Period: Three years from date of Substantial Completion, unless otherwise indicated.

D. Special Warranty Periods:

1. Ten years for mortise locks and latches.
2. Twenty five years for manual surface door closers.
3. Two years for electromechanical door hardware.

1.8 MAINTENANCE SERVICE

A. Maintenance Tools and Instructions: Furnish a complete set of specialized tools and maintenance instructions as needed for Owner's continued adjustment, maintenance, and removal and replacement of door hardware.

B. Continuing Service: Beginning at Substantial Completion, and running concurrent with the specified warranty period, provide continuous (6) months full maintenance including repair and replacement of worn or defective components, lubrication, cleaning, and adjusting as required for proper door opening operation. Provide parts and supplies as used in the manufacture and installation of original products. Include quarterly preventative maintenance.

PART 2 - PRODUCTS

2.1 SCHEDULED DOOR HARDWARE

A. General: Provide door hardware for each door to comply with requirements in Door Hardware Sets and each referenced section that products are to be supplied under.

1. Designations: Requirements for quantity, item, size, finish or color, grade, function, and other distinctive qualities of each type of door hardware are indicated in the Door Hardware Sets at the end of Part 3. Products are identified by using door hardware designations, as follows:

a. Named Manufacturer's Products: Product designation and manufacturer are listed for each door hardware type required for the purpose of establishing requirements. Manufacturers' names are abbreviated in the Door Hardware Schedule.

B. Substitutions: Requests for substitution and product approval for inclusive mechanical and electromechanical door hardware in compliance with the specifications must be submitted in writing and in accordance with the procedures and time frames outlined in Division 01, Substitution Procedures. Approval of requests is at the discretion of the architect, owner, and their designated consultants.

2.2 HINGING DEVICES

A. Hinges: ANSI/BHMA A156.1 certified butt hinges with number of hinge knuckles as specified in the Door Hardware Sets.

1. Quantity: Provide the following hinge quantity, unless otherwise indicated:

a. Two Hinges: For doors with heights up to 60 inches.
b. Three Hinges: For doors with heights 61 to 90 inches.

c. Four Hinges: For doors with heights 91 to 120 inches.
d. For doors with heights more than 120 inches, provide 4 hinges, plus 1 hinge for every 30 inches of door height greater than 120 inches.

2. Hinge Size: Provide the following, unless otherwise indicated, with hinge widths sized for door thickness and clearances required:

a. Widths up to 3'6": 4-1/2" standard or heavy weight as specified.
b. Sizes from 3'7" to 4'0": 5" standard or heavy weight as specified.

3. Hinge Weight and Base Material: Unless otherwise indicated, provide the following:

a. Exterior Doors: Heavy weight, non-ferrous, ball bearing or oil impregnated bearing hinges unless Hardware Sets indicate standard weight.
b. Interior Doors: Standard weight, steel, ball bearing or oil impregnated bearing hinges unless Hardware Sets indicate heavy weight.

4. Hinge Options: Comply with the following where indicated in the Hardware Sets or on Drawings:

a. Non-removable Pins: Provide set screw in hinge barrel that, when tightened into a groove in hinge pin, prevents removal of pin while door is closed; for the following applications:

1) Out-swinging exterior doors.
2) Out-swinging access controlled doors.
3) Out-swinging lockable doors.

5. Acceptable Manufacturers:

a. Hager Companies (HA).
b. McKinney Products (MK).

B. Continuous Geared Hinges: ANSI/BHMA A156.26 certified continuous geared hinge with minimum 0.120-inch thick extruded 6060 T6 aluminum alloy hinge leaves and a minimum overall width of 4 inches. Hinges are non-handed, reversible and fabricated to template screw locations. Provide concealed flush mount (with or without inset), full surface, or half surface, in standard and heavy duty models, as specified in the Hardware Sets. Concealed continuous hinges to be U.L. listed for use on up to and including 90 minute rated door installations and U.L. listed for windstorm components where applicable. Factory cut hinges for door size and provide with removable service power transfer panel where indicated at electrified openings.

1. Acceptable Manufacturers:

a. McKinney Products (MK).
b. Pemko Manufacturing (PE).
c. Stanley Hardware (ST).

2.3 POWER TRANSFER DEVICES

A. Electrified Quick Connect Transfer Hinges: Provide electrified transfer hinges with Molex™ standardized plug connectors and sufficient number of concealed wires (up to 12) to accommodate the electrified functions specified in the Door Hardware Sets. Connectors plug

directly to through-door wiring harnesses for connection to electric locking devices and power supplies. Wire nut connections are not acceptable.

1. Acceptable Manufacturers:

   a. Hager Companies (HA) - ETW-QC (# wires) Option.
   b. McKinney Products (MK) - QC (# wires) Option.

B. Concealed Quick Connect Electric Power Transfers: Provide concealed wiring pathway housing mortised into the door and frame for low voltage electrified door hardware. Furnish with Molex™ standardized plug connectors and sufficient number of concealed wires (up to 12) to accommodate the electrified functions specified in the Door Hardware Sets. Connectors plug directly to through-door wiring harnesses for connection to electric locking devices and power supplies. Wire nut connections are not acceptable.

1. Acceptable Manufacturers:

   a. McKinney (MK) - EL-EPT.
   b. Securitron (SU) - EL-CEPT Series.
   c. Von Duprin (VD) - EPT-10 Series.

2.4 DOOR OPERATING TRIM

A. Flush Bolts and Surface Bolts: ANSI/BHMA A156.3 and A156.16, Grade 1, certified automatic, self-latching, and manual flush bolts and surface bolts. Manual flush bolts to be furnished with top rod of sufficient length to allow bolt location approximately six feet from the floor. Furnish dust proof strikes for bottom bolts. Surface bolts to be minimum 8” in length and U.L. listed for labeled fire doors and U.L. listed for windstorm components where applicable. Provide related accessories (mounting brackets, strikes, coordinators, etc.) as required for appropriate installation and operation.

1. Acceptable Manufacturers:

   a. Ives (IV).
   b. Rockwood Manufacturing (RO).
   c. Trimco (TC).

B. Door Push Plates and Pulls: ANS/BHMA A156.6 certified door pushes and pulls of type and design specified below or in the Hardware Sets. Coordinate and provide proper width and height as required where conflicting hardware dictates.

1. Push/Pull Plates: Minimum .050 inch thick, size as indicated in hardware sets, with beveled edges, secured with exposed screws unless otherwise indicated.
2. Door Pull and Push Bar Design: Size, shape, and material as indicated in the hardware sets. Minimum clearance of 2 1/2-inches from face of door unless otherwise indicated.
3. Offset Pull Design: Size, shape, and material as indicated in the hardware sets. Minimum clearance of 2 1/2-inches from face of door and offset of 90 degrees unless otherwise indicated.
4. Fasteners: Provide manufacturer's designated fastener type as indicated in Hardware Sets.

   a. Acceptable Manufacturers:

      1) Ives (IV).

2) Rockwood Manufacturing (RO).
3) Trimco (TC).

2.5 CYLINDERS AND KEYING

A. General: Cylinder manufacturer to have minimum (10) years experience designing secured master key systems and have on record a published security keying system policy.

B. Source Limitations: Obtain each type of keyed cylinder and keys from the same source manufacturer as locksets and exit devices, unless otherwise indicated.

1. Acceptable Manufacturers:

a. Stanley Best (BE).
b. No Substitution – Facility Standard.

C. Cylinders: Original manufacturer cylinders complying with the following:

1. Mortise Type: Threaded cylinders with rings and straight- or clover-type cam.
2. Rim Type: Cylinders with back plate, flat-type vertical or horizontal tailpiece, and raised trim ring.
3. Bored-Lock Type: Cylinders with tailpieces to suit locks.
4. Mortise and rim cylinder collars to be solid and recessed to allow the cylinder face to be flush and be free spinning with matching finishes.

D. Keying System: Each type of lock and cylinders to be factory keyed. Conduct specified "Keying Conference" to define and document keying system instructions and requirements. Furnish factory cut, nickel-silver large bow permanently inscribed with a visual key control number as directed by Owner. Incorporate decisions made in keying conference, and as follows:

1. Existing System: Master key or grand master key locks to Owner's existing system.

E. Construction Keying: Provide construction master keyed cylinders or temporary keyed construction cores where specified. Provide construction master keys in quantity as required by project Contractor. Replace construction cores with permanent cores. Furnish permanent cores for installation as directed under specified "Keying Conference".

F. Key Registration List: Provide keying transcript list to Owner's representative in the proper format for importing into key control software.

G. Key Control Cabinet: Provide a key control system including envelopes, labels, and tags with self-locking key clips, receipt forms, 3-way visible card index, temporary markers, permanent markers, and standard metal cabinet. Key control cabinet shall have expansion capacity of 150% of the number of locks required for the project.

1. Acceptable Manufacturers:

a. Lund Equipment (LU).
b. MMF Industries (MM).
c. Telkee (TK).

2.6 MECHANICAL LOCKS AND LATCHING DEVICES

A. Mortise Locksets, Grade 1 (Heavy Duty): ANSI/BHMA A156.13, Series 1000, Operational Grade 1 certified mortise locksets furnished in the functions as specified in the Hardware Sets. Locksets to be manufactured with a corrosion resistant, stamped 12 gauge minimum formed steel case and be field-reversible for handing without disassembly of the lock body. Lockset trim (including knobs, levers, escutcheons, roses) to be the product of a single manufacturer. Furnish with standard 2 3/4" backset, 3/4" throw anti-friction stainless steel latchbolt, and a full 1" throw stainless steel bolt for deadbolt functions.

1. Acceptable Manufacturers:

a. Stanley Best (BE) – 40H Series.

B. Cylindrical Locksets, Grade 1 (Heavy Duty): ANSI/BHMA A156.2, Series 4000, Grade 1 certified cylindrical (bored) locksets furnished in the functions as specified in the Hardware Sets. Lock chassis fabricated of heavy gauge steel, zinc dichromate plated, with through-bolted application. Furnish with solid cast levers, standard 2 3/4” backset, and 1/2" (3/4" at rated paired openings) throw brass or stainless steel latchbolt. Locks are to be non-handed and fully field reversible.

1. Acceptable Manufacturers:

a. Stanley Best (BE) – 9K Series.
b. No Substitution – Facility Standard.

C. Lock Trim Design: As specified in Hardware Sets.

2.7 LOCK AND LATCH STRIKES

A. Strikes: Provide manufacturer's standard strike with strike box for each latch or lock bolt, with curved lip extended to protect frame, finished to match door hardware set, unless otherwise indicated, and as follows:

1. Flat-Lip Strikes: For locks with three-piece antifriction latchbolts, as recommended by manufacturer.
2. Extra-Long-Lip Strikes: For locks used on frames with applied wood casing trim.
3. Aluminum-Frame Strike Box: Provide manufacturer's special strike box fabricated for aluminum framing.

B. Standards: Comply with the following:

1. Strikes for Mortise Locks and Latches: BHMA A156.13.
2. Strikes for Bored Locks and Latches: BHMA A156.2.
3. Strikes for Auxiliary Deadlocks: BHMA A156.5.
4. Dustproof Strikes: BHMA A156.16.

2.8 CONVENTIONAL EXIT DEVICES

A. General Requirements: All exit devices specified herein shall meet or exceed the following criteria:

1. At doors not requiring a fire rating, provide devices complying with NFPA 101 and listed and labeled for "Panic Hardware" according to UL305. Provide proper fasteners as

required by manufacturer including sex nuts and bolts at openings specified in the Hardware Sets.

2. Where exit devices are required on fire rated doors, provide devices complying with NFPA 80 and with UL labeling indicating "Fire Exit Hardware". Provide devices with the proper fasteners for installation as tested and listed by UL. Consult manufacturer's catalog and template book for specific requirements.

3. Except on fire rated doors, provide exit devices with hex key dogging device to hold the pushbar and latch in a retracted position. Provide optional keyed cylinder dogging on devices where specified in Hardware Sets.

4. Devices must fit flat against the door face with no gap that permits unauthorized dogging of the push bar. The addition of filler strips is not acceptable except in any case where the door light extends behind the device as in a full glass configuration.

5. Flush End Caps: Provide heavy weight impact resistant flush end caps made of architectural metal in the same finish as the devices as in the Hardware Sets. Plastic end caps will not be acceptable.

6. Lever Operating Trim: Where exit devices require lever trim, furnish manufacturer's heavy duty trim with cold forged escutcheons, beveled edges, and four threaded studs for thru-bolts.

    a. Lock Trim Design: As indicated in Hardware Sets, provide finishes and designs to match that of the specified locksets. Provided free-wheeling type trim where indicated.
    b. Where function of exit device requires a cylinder, provide an interchangeable core type keyed cylinder (Rim or Mortise) as specified in Hardware Sets.

7. Vertical Rod Exit Devices: Provide and install interior surface and concealed vertical rod exit devices as Less Bottom Rod (LBR) unless otherwise indicated.

8. Narrow Stile Applications: At doors constructed with narrow stiles, or as specified in Hardware Sets, provide devices designed for maximum 2" wide stiles.

9. Dummy Push Bar: Nonfunctioning push bar matching functional push bar.

10. Rail Sizing: Provide exit device rails factory sized for proper door width application.

11. Through Bolt Installation: For exit devices and trim as indicated in Door Hardware Sets.

B. Conventional Push Rail Exit Devices (Heavy Duty): ANSI/BHMA A156.3, Grade 1 certified panic and fire exit hardware devices furnished in the functions specified in the Hardware Sets. Mounting rails to be formed from smooth stainless steel, brass or bronze architectural materials no less than 0.072" thick, with push rails a minimum of 0.062" thickness. Painted or aluminum metal rails are not acceptable. Exit device latch to be investment cast stainless steel, pullman type, with deadlock feature.

1. Acceptable Manufacturers:

    a. Von Duprin (VD) - 35A/98 XP Series.
    b. No Substitution – Facility Standard.

2.9 ELECTROMECHANICAL CONVENTIONAL EXIT DEVICES

A. Electrified Conventional Push Rail Devices (Heavy Duty): Subject to same compliance standards and requirements as mechanical exit devices, electrified devices to be of type and design as specified below. Include any specific controllers when conventional power supplies are not sufficient to provide the proper inrush current.

1. Acceptable Manufacturers:

a. Von Duprin (VD) - 35A/98/99 Series.
b. No Substitution – Facility Standard.

B. Electrified Options: As indicated in hardware sets, provide electrified exit device options including: electric latch retraction , electric dogging, outside door trim control, exit alarm, delayed egress, latchbolt monitoring, lock/unlock status monitoring, touchbar monitoring and request-to-exit signaling. Unless otherwise indicated, provide electrified exit devices standard as fail secure.

2.10 DOOR CLOSERS

A. All door closers specified herein shall meet or exceed the following criteria:

1. General: Door closers to be from one manufacturer, matching in design and style, with the same type door preparations and templates regardless of application or spring size. Closers to be non-handed with full sized covers including installation and adjusting information on inside of cover.

2. Standards: Closers to comply with UL-10C and UBC 7-2 for Positive Pressure Fire Test and be U.L. listed for use of fire rated doors.

3. Size of Units: Comply with manufacturer's written recommendations for sizing of door closers depending on size of door, exposure to weather, and anticipated frequency of use. Where closers are indicated for doors required to be accessible to the physically handicapped, provide units complying with ANSI ICC/A117.1.

4. Closer Arms: Provide heavy duty, forged steel closer arms unless otherwise indicated in Hardware Sets.

a. Where closers are indicated to have mechanical dead-stop, provide heavy duty arms and brackets with an integral positive stop.
b. Where closers are indicated to have mechanical hold open, provide heavy duty units with an additional built-in mechanical holder assembly designed to hold open against normal wind and traffic conditions. Holder to be manually selectable to on-off position.
c. Where closers are indicated to have a cushion-type stop, provide heavy duty arms and brackets with spring stop mechanism to cushion door when opened to maximum degree.
d. Closers shall not be installed on exterior or corridor side of doors; where possible install closers on door for optimum aesthetics. Provide drop plates or other accessories as required for proper mounting.

5. Closer Accessories: Provide door closer accessories including custom templates, special mounting brackets, spacers and drop plates, and through-bolt or security type fasteners as specified in the door Hardware Sets.

B. Door Closers, Surface Mounted (Large Body Cast Iron): ANSI/BHMA A156.4, Grade 1 surface mounted, heavy duty door closers with complete spring power adjustment, sizes 1 thru 6; and fully operational adjustable according to door size, frequency of use, and opening force. Closers to be rack and pinion type, one piece cast iron body construction, with adjustable backcheck and separate non-critical valves for closing sweep and latch speed control.

1. Acceptable Manufacturers:

a. LCN Closers (LC) - 4040XP Series.
b. No Substitution – Facility Standard.

2.11 AUTOMATIC DOOR OPERATORS

A. General: Provide operators of size recommended by manufacturer for door size, weight, and movement; for condition of exposure; and for compliance with UL 325. Coordinate operator mechanisms with door operation, hinges, and activation devices.

1. Fire-Rated Doors: Provide door operators for fire-rated door assemblies that comply with NFPA 80 for fire-rated door components and are listed and labeled by a qualified testing agency.

B. Electromechanical Door Operators: Self-contained units powered by permanent magnet DC motor, with closing speed controlled mechanically by gear train, connections for power, activation and safety device wiring, and manual operation including spring closing when power is off.

C. Brackets and Reinforcements: Manufacturer's standard, fabricated from aluminum with nonferrous shims for aligning system components.

D. Standard: Certified ANSI/BHMA A156.19.

1. Performance Requirements:

a. Opening Force if Power Fails: Not more than 15 lbf required to release a latch if provided, not more than 30 lbf required to manually set door in motion, and not more than 15 lbf required to fully open door.
b. Entrapment Protection: Not more than 15 lbf required to prevent stopped door from closing or opening.

E. Configuration: Surface mounted. Door operators to control single swinging and pair of swinging doors.

F. Operation: Power opening and spring closing operation capable of meeting ANSI A117.1 accessibility guideline. Provide time delay for door to remain open before initiating closing cycle as required by ANSI/BHMA A156.19. When not in automatic mode, door operator to function as manual door closer with fully adjustable opening and closing forces, with or without electrical power.

1. On-off switch to control power to be key switch operated.

G. Features: Operator units to have full feature adjustments for door opening and closing force and speed, backcheck, motor assist acceleration from 0 to 30 seconds, time delay, vestibule interface delay, obstruction recycle, and hold open time from 0 up to 30 seconds.

H. Provide outputs and relays on board the operator to allow for coordination of exit device latch retraction, electric strikes, magnetic locks, card readers, safety and motion sensors and specified auxiliary contacts.

I. Activation Devices: Provide activation devices in accordance with ANSI/BHMA A156.19 standard, for condition of exposure indicated and for long term, maintenance free operation under normal traffic load operation. Coordinate activation control with electrified hardware and access control interfaces. Activation switches are standard SPST, with optional DPDT availability.

J. Signage: As required by cited ANSI/BHMA A156.19 standard for the type of operator.

1. Acceptable Manufacturers:

a. Besam Automated Entrance Systems (BE) - SW100 Series.
b. Horton Automatics (HO) - 4000 Series.
c. LCN Closers (LC) - 4640 Series.

2.12 ARCHITECTURAL TRIM

A. Door Protective Trim

1. General: Door protective trim units to be of type and design as specified below or in the Hardware Sets.

2. Size: Fabricate protection plates (kick, armor, or mop) not more than 2" less than door width (LDW) on stop side of single doors and 1” LDW on stop side of pairs of doors, and not more than 1" less than door width on pull side. Coordinate and provide proper width and height as required where conflicting hardware dictates. Height to be as specified in the Hardware Sets.

3. Metal Protection Plates: ANSI/BHMA A156.6 certified metal protection plates (kick, armor, or mop), beveled on four edges (B4E), fabricated from the following:

a. Stainless Steel: 300 series, 050-inch thick, with countersunk screw holes (CSK).

4. Fasteners: Provide manufacturer's designated fastener type as specified in the Hardware Sets.

5. Metal Door Edging: Door protection edging fabricated from a minimum .050-inch thick metal sheet, formed into an angle or "U" cap shapes, surface or mortised mounted onto edge of door. Provide appropriate leg overlap to account for protection plates as required. Height to be as specified in the Hardware Sets.

6. Acceptable Manufacturers:

a. Ives (IV).
b. Rockwood Manufacturing (RO).

2.13 SLIDING WINDOW HARDWARE

A. General: Provide Factory formed metal tracks designed to be installed on top and bottom of equal sliding glass panels. Include all required accessories.

B. Roll Bearing Track for Sliding Windows/ Doors: Provide a smooth, ball bearing track system for sliding glass doors to move back and forth with ease.

1. Acceptable Manufacturers:

a. Knape & Vogt
b. Or approved manufacturer.

2. Product: Roll-Ezy Ball Bearing Track P992 ZC
3. Composition and Material: Pre-coated steel or Zinc
   a. 953
   b. 992ASM
   c. 993-12
   d. 995
   e. 997-1
   f. 999-10
4. Length: 144 inch track
5. Finishes: Pre-coated Steel, Zinc

C. Applicable Standards:
1. Performance standard ANSI / BHMA A 156.9-2003

D. Warranty: limited lifetime warranty.

E. Maintenance: Inspect for proper fit annually and adjust as required.

F. Provide Glass as specified in drawing.

2.14 DOOR STOPS AND HOLDERS

A. General: Door stops and holders to be of type and design as specified below or in the Hardware Sets.

B. Door Stops and Bumpers: ANSI/BHMA A156.16, Grade 1 certified door stops and wall bumpers. Provide wall bumpers, either convex or concave types with anchorage as indicated, unless floor or other types of door stops are specified in Hardware Sets. Do not mount floor stops where they will impede traffic. Where floor or wall bumpers are not appropriate, provide overhead type stops and holders.

1. Acceptable Manufacturers:

a. Ives (IV).
b. Rockwood Manufacturing (RO).
c. Trimco (TC).

C. Overhead Door Stops and Holders: ANSI/BHMA A156.6, Grade 1 certified overhead stops and holders to be surface or concealed types as indicated in Hardware Sets. Track, slide, arm and jamb bracket to be constructed of extruded bronze and shock absorber spring of heavy tempered steel. Provide non-handed design with mounting brackets as required for proper operation and function.

1. Acceptable Manufacturers:

    a. Rixson Door Controls (RF).
    b. Rockwood Manufacturing (RO).
    c. Sargent Manufacturing (SA).

2.15 ARCHITECTURAL SEALS

A. General: Thresholds, weatherstripping, and gasket seals to be of type and design as specified below or in the Hardware Sets. Provide continuous weatherstrip gasketing on exterior doors and provide smoke, light, or sound gasketing on interior doors where indicated. At exterior applications provide non-corrosive fasteners and elsewhere where indicated.

B. Smoke Labeled Gasketing: Assemblies complying with NFPA 105 that are listed and labeled by a testing and inspecting agency acceptable to authorities having jurisdiction, for smoke control ratings indicated, based on testing according to UL 1784.

1. Provide smoke labeled perimeter gasketing at all smoke labeled openings.

C. Fire Labeled Gasketing: Assemblies complying with NFPA 80 that are listed and labeled by a testing and inspecting agency acceptable to authorities having jurisdiction, for fire ratings indicated, based on testing according to UL-10C.

1. Provide intumescent seals as indicated to meet UL10C Standard for Positive Pressure Fire Tests of Door Assemblies, and UBC 7-2, Fire Tests of Door Assemblies.

D. Sound-Rated Gasketing: Assemblies that are listed and labeled by a testing and inspecting agency, for sound ratings indicated, based on testing according to ASTM E 1408.

E. Replaceable Seal Strips: Provide only those units where resilient or flexible seal strips are easily replaceable and readily available from stocks maintained by manufacturer.

F. Acceptable Manufacturers:

1. National Guard Products (NG).
2. Pemko Manufacturing (PE).
3. Reese Enterprises, Inc. (RS).

2.16 ELECTRONIC ACCESSORIES

A. Key Switches: Key switches furnished standard with stainless steel single gang face plate with a 12/24VDC bi-color LED indicator. Integral backing bracket permits integration with any 1 1/4" or 1 1/2" mortise type cylinder. Key switches available as momentary or maintained action and in narrow face plate options.

1. Acceptable Manufacturers:

    a. Securitron (SU) - MK Series.

B. Door Position Switches: Door position magnetic reed contact switches specifically designed for use in commercial door applications. On recessed models the contact and magnetic housing snap-lock into a 1" diameter hole. Surface mounted models include wide gap distance design

complete with armored flex cabling. Provide SPDT, N/O switches with optional Rare Earth Magnet installation on steel doors with flush top channels.

1. Acceptable Manufacturers:

   a. Securitron (SU) - DPS Series.

C. Proximity Access Cards and Credentials: RF programmable, 125 kHz access control/identification cards utilizing a passive, no battery design allowing for infinite number of reads. Cards are programmable in any HID proximity format up to 85 bits and compatible with all HID proximity readers.

1. Acceptable Manufacturers (125 kHz Proximity):

   a. HID Global (HD) - ISO Prox ll Series.

D. Power Supplies: Provide Nationally Recognized Testing Laboratory Listed 12VDC or 24VDC (field selectable) filtered and regulated power supplies. Include battery backup option with integral battery charging capability in addition to operating the DC load in event of line voltage failure. Provide the least number of units, at the appropriate amperage level, sufficient to exceed the required total draw for the specified electrified hardware and access control equipment.

1. Acceptable Manufacturers:

   a. Securitron (SU) - BPS Series.
   b. Von Duprin (VO) - PS.

2.17 FABRICATION

A. Fasteners: Provide door hardware manufactured to comply with published templates generally prepared for machine, wood, and sheet metal screws. Provide screws according to manufacturers recognized installation standards for application intended.

2.18 FINISHES

A. Standard: Designations used in the Hardware Sets and elsewhere indicate hardware finishes complying with ANSI/BHMA A156.18, including coordination with traditional U.S. finishes indicated by certain manufacturers for their products.

B. Provide quality of finish, including thickness of plating or coating (if any), composition, hardness, and other qualities complying with manufacturer's standards, but in no case less than specified by referenced standards for the applicable units of hardware.

C. Protect mechanical finishes on exposed surfaces from damage by applying a strippable, temporary protective covering before shipping.

PART 3 - EXECUTION

3.1 EXAMINATION

A. Examine scheduled openings, with Installer present, for compliance with requirements for installation tolerances, labeled fire door assembly construction, wall and floor construction, and other conditions affecting performance.

B. Notify architect of any discrepancies or conflicts between the door schedule, door types, drawings and scheduled hardware. Proceed only after such discrepancies or conflicts have been resolved in writing.

3.2 PREPARATION

A. Hollow Metal Doors and Frames: Comply with ANSI/DHI A115 series.

B. Wood Doors: Comply with ANSI/DHI A115-W series.

3.3 INSTALLATION

A. Install each item of mechanical and electromechanical hardware and access control equipment to comply with manufacturer's written instructions and according to specifications.

1. Installers are to be trained and certified by the manufacturer on the proper installation and adjustment of fire, life safety, and security products including: hanging devices; locking devices; closing devices; and seals.

B. Mounting Heights: Mount door hardware units at heights indicated in following applicable publications, unless specifically indicated or required to comply with governing regulations:

1. Standard Steel Doors and Frames: DHI's "Recommended Locations for Architectural Hardware for Standard Steel Doors and Frames."
2. Wood Doors: DHI WDHS.3, "Recommended Locations for Architectural Hardware for Wood Flush Doors."
3. Where indicated to comply with accessibility requirements, comply with ANSI A117.1 "Accessibility Guidelines for Buildings and Facilities."
4. Provide blocking in drywall partitions where wall stops or other wall mounted hardware is located.

C. Power Operator products and accessories are required to be installed through current members of the manufacturer's "Power Operator Preferred Installer" program.

D. Retrofitting: Install door hardware to comply with manufacturer's published templates and written instructions. Where cutting and fitting are required to install door hardware onto or into surfaces that are later to be painted or finished in another way, coordinate removal, storage, and reinstallation of surface protective trim units with finishing work specified in Division 9 Sections. Do not install surface-mounted items until finishes have been completed on substrates involved.

E. Thresholds: Set thresholds for exterior and acoustical doors in full bed of sealant complying with requirements specified in Division 7 Section "Joint Sealants."

F. Storage: Provide a secure lock up for hardware delivered to the project but not yet installed. Control the handling and installation of hardware items so that the completion of the work will not be delayed by hardware losses before and after installation.

3.4 FIELD QUALITY CONTROL

A. Field Inspection: Supplier will perform a final inspection of installed door hardware and state in report whether work complies with or deviates from requirements, including whether door hardware is properly installed, operating and adjusted.

3.5 ADJUSTING

A. Initial Adjustment: Adjust and check each operating item of door hardware and each door to ensure proper operation or function of every unit. Replace units that cannot be adjusted to operate as intended. Adjust door control devices to compensate for final operation of heating and ventilating equipment and to comply with referenced accessibility requirements.

3.6 CLEANING AND PROTECTION

A. Protect all hardware stored on construction site in a covered and dry place. Protect exposed hardware installed on doors during the construction phase. Install any and all hardware at the latest possible time frame.

B. Clean adjacent surfaces soiled by door hardware installation.

C. Clean operating items as necessary to restore proper finish. Provide final protection and maintain conditions that ensure door hardware is without damage or deterioration at time of owner occupancy.

Hardware Schedule

Set: 1.0
Doors: 100.1, 129.1

2	Continuous Hinge	CFMHD1 PT		PE
1	Surface Vert Rod Exit	EL RX 3527A-TL 374Tx386DT(Std)	US26D	VD
1	Surface Vert Rod Exit	RX 3527A-DT 386DT(Std)	US26D	VD
2	Core	Uncombinated Core w/2 Keys		
2	Cylinder, mortise	1E-74	626	BE
1	Door Closer	4040XP CUSH	AL	LC
1	Spacer	4040XP-61	AL	LC
1	Door Operator	SW100 (includes Actuator Switches)	689	BE

1	Threshold	273x3AFG		PE
2	Sweep	by Door Manufacturer		
1	Astragal Set	by Door Manufacturer		
2	Electric Power Transfer	EPT10	SP28	VD
2	Position Switch	DPS		SU
1	Keyswitch	MKA		SU
1	iClass Reader	R40 Reader 6120		HD
1	Power Supply	PS914 900-2RS		VD

Notes: ACCESS BY AUTHORIZED CARD CREDENTIAL OR MANUAL KEY. ACCESS CONTROL PROGRAMMABLE FOR PUSH / PULL OPERATION IS AVAILABLE. EXTERIOR ACTUATOR SWTICH ACTIVATED BY CARD READER. ALWAYS FREE EGRESS. SEQUENCE OPERATION WITH INTERIOR VESTIBULE DOOR AS DIRECTED BY OWNER. KEYSWTICH TO TURN OPERATOR ON/OFF FOR MAINTENANCE/SERVICE.

Set: 2.0
Doors: 100.2

2	Continuous Hinge	CFMHD1 PT		PE
1	Surface Vert Rod Exit	EL RX 3527A-TL 374Tx386DT(Std)	US26D	VD
1	Surface Vert Rod Exit	RX 3527A-DT 386DT(Std)	US26D	VD
2	Core	Uncombinated Core w/2 Keys		
2	Cylinder, mortise	1E-74	626	BE
1	Door Closer	4040XP CUSH	AL	LC
1	Spacer	4040XP-61	AL	LC
1	Door Operator	SW100 (includes Actuator Switches)	689	BE
1	Astragal Set	by Door Manufacturer		
2	Electric Power Transfer	EPT10	SP28	VD
2	Position Switch	DPS		SU
1	Keyswitch	MKA		SU
1	iClass Reader	R40 Reader 6120		HD
1	Power Supply	PS914 900-2RS		VD

Notes: ACCESS BY MANUAL KEY UNLESS DEVICE IS HELD IN THE OPEN PUSH/PULL POSITION. ACCESS CONTROL PROGRAMMABLE FOR PUSH / PULL OPERATION IS AVAILABLE. ACTUATOR SWITCHES ALWAYS ACTIVE. ALWAYS FREE EGRESS. SEQUENCE OPERATION WITH EXTERIOR VESTIBULE DOOR AS DIRECTED BY OWNER. KEYSWTICH TO TURN OPERATOR ON/OFF FOR MAINTENANCE/SERVICE.

Set: 3.0
Doors: 127.2, 131.2, 136.2, 141.2

1	Core	Uncombinated Core w/2 Keys		
1	Cylinder, mortise	1E-74	626	BE
1	Position Switch	DPS		SU
1	iClass Reader	R40 Reader 6120		HD

Notes: ALL REMAINING TO BE PROVIDED BY DOOR SUPPLIER. COORDINATE CARD READER WITH ACCESS CONTROL PROVIDER AT OPENINGS THAT REQUIRE ACCESS CONTROL.

Set: 4.0
Doors: 127.1

1	Continuous Hinge	CFMHD1 PT		PE
1	Rim Exit Device	RX 98EO	US26D	VD
1	Door Closer	4040XP CUSH	AL	LC

1	Threshold	273x3AFG		PE
1	Gasketing	2891AS		PE
1	Rain Guard	346C		PE
1	Sweep	3452AV		PE
1	Electric Power Transfer	EPT10	SP28	VD
1	Position Switch	DPS		SU
1	Power Supply	PS914		VD

Set: 5.0
Doors: 131.1

2	Hinge (heavy weight)	T4A3386 NRP 4-1/2" x 4-1/2"	US32D	MK
1	Hinge (heavy weight)	T4A3386 CC8 4-1/2" x 4-1/2"	US32D	MK
1	Electrified Mortise Lock	47HW7DEU 15R RQE fail secure	630	BE
1	Core	Uncombinated Core w/2 Keys		
1	Door Closer	4040XP CUSH	AL	LC
1	Threshold	273x3AFG		PE
1	Gasketing	2891AS		PE
1	Rain Guard	346C		PE
1	Sweep	3452AV		PE
1	Position Switch	DPS		SU
1	iClass Reader	R40 Reader 6120		HD
1	Power Supply	BPS-24-1		SU

Notes: ACCESS BY AUTHORIZED CARD CREDENTIAL OR MANUAL KEY. ALWAYS FREE EGRESS.

Set: 6.0
Doors: 135.2, 136.1, 141.1

3	Hinge (heavy weight)	T4A3386 NRP 4-1/2" x 4-1/2"	US32D	MK
1	Mortise Lock, storeroom	47H7D 15R	626	BE
1	Core	Uncombinated Core w/2 Keys		
1	Door Closer	4040XP HCUSH	AL	LC
1	Threshold	273x3AFG		PE
1	Gasketing	2891AS		PE
1	Rain Guard	346C		PE
1	Sweep	3452AV		PE
1	Position Switch	DPS		SU

Set: 7.0
Doors: 139.0, S104

6	Hinge (heavy weight)	T4A3386 NRP 4-1/2" x 4-1/2"	US32D	MK
1	Surface Vert Rod Exit	9827EO	US26D	VD
1	Surface Vert Rod Exit	9827L-NL 06 06SS-32D 996L-NL	US32D	VD
1	Core	Uncombinated Core w/2 Keys		
1	Cylinder, rim	1E-72	626	BE
1	Threshold	273x3AFG		PE
1	Gasketing	2891AS		PE
1	Rain Guard	346C		PE
2	Sweep	3452AV		PE
1	Astragal	303AS		PE
1	Position Switch	DPS		SU

Set: 8.0
Doors: 101.1, 101.2

2	Hinge (heavy weight)	T4A3786 NRP 4-1/2" x 4-1/2"	US26D	MK
1	Hinge (heavy weight)	T4A3786 CC8 4-1/2" x 4-1/2"	US26D	MK
1	Electrified Mortise Lock	47HW7DEU 15R RQE fail secure	626	BE
1	Core	Uncombinated Core w/2 Keys		
1	Door Closer	4040XP CUSH	AL	LC
1	Kickplate	K1050 10" x 2" LDW 4B3 CSK	US32D	RO
3	Silencer	608		RO
1	Position Switch	DPS		SU
1	iClass Reader	R40 Reader 6120		HD
1	Power Supply	BPS-24-1		SU

Notes: ACCESS BY AUTHORIZED CARD CREDENTIAL OR MANUAL KEY. ALWAYS FREE EGRESS.

Set: 9.0
Doors: 102.0

3	Hinge	TA2714 4-1/2" x 4-1/2"	US26D	MK
1	Cylindrical Lock, entrance	9K37AB 15D S3	626	BE
1	Core	Uncombinated Core w/2 Keys		
1	Door Closer	4040XP H	AL	LC
1	Kickplate	K1050 10" x 2" LDW 4B3 CSK	US32D	RO
1	Wall Stop	409	US32D	RO
3	Silencer	608		RO

Set: 10.0
Doors: 103.0, 223.0

3	Hinge	TA2714 NRP 4-1/2" x 4-1/2"	US26D	MK
1	Cylindrical Lock, storeroom	9K37D 15D S3	626	BE
1	Core	Uncombinated Core w/2 Keys		
1	Door Closer	4040XP CUSH	AL	LC
1	Kickplate	K1050 10" x 2" LDW 4B3 CSK	US32D	RO
1	Gasketing	S88D		PE

Set: 11.0
Doors: 104.0, 110.2, 117.0, 124.0, 133.1, 135.1, 204.0, 209.0, 215.0, 219.0

3	Hinge	TA2714 4-1/2" x 4-1/2"	US26D	MK
1	Cylindrical Lock, storeroom	9K37D 15D S3	626	BE
1	Core	Uncombinated Core w/2 Keys		
1	Door Closer	4040XP REG	AL	LC
1	Kickplate	K1050 10" x 2" LDW 4B3 CSK	US32D	RO
1	Wall Stop	409	US32D	RO
3	Silencer	608		RO

Notes: GASKETING AT OPEINGS 209 AND 219.

Set: 12.0
Doors: 105.0

3	Hinge	TA2714 4-1/2" x 4-1/2"	US26D	MK
1	Cylindrical Lock, classroom	9K37R 15D S3	626	BE
1	Core	Uncombinated Core w/2 Keys		
1	Door Closer	4040XP H	AL	LC
1	Kickplate	K1050 10" x 2" LDW 4B3 CSK	US32D	RO

1	Wall Stop	409	US32D	RO
3	Silencer	608		RO

Set: 13.0
Doors: 106.0, 125.1, 125.2, 132.1, 132.2

3	Hinge	TA2714 4-1/2" x 4-1/2"	US26D	MK
1	Cylindrical Lock, entrance	9K37AB 15D S3	626	BE
1	Core	Uncombinated Core w/2 Keys		
1	Surface Closer	4040XPT-Pull BUMPER	AL	LC
1	Kickplate	K1050 10" x 2" LDW 4B3 CSK	US32D	RO
3	Silencer	608		RO

Notes: S88D @ 132.2

Set: 14.0
Doors: 107.0, 108.0, 109.0, 111.0, 123.1, 206.0, 207.0, 208.0

3	Hinge	TA2714 4-1/2" x 4-1/2"	US26D	MK
1	Cylindrical Lock, entrance	9K37AB 15D S3	626	BE
1	Core	Uncombinated Core w/2 Keys		
1	Door Closer	4040XP REG	AL	LC
1	Kickplate	K1050 10" x 2" LDW 4B3 CSK	US32D	RO
1	Wall Stop	409	US32D	RO
3	Silencer	608		RO

Set: 15.0
Doors: 110.1, 120.0, 200.0

2	Hinge (heavy weight)	T4A3786 4-1/2" x 4-1/2"	US26D	MK
1	Hinge (heavy weight)	T4A3786 CC8 4-1/2" x 4-1/2"	US26D	MK
1	Electrified Mortise Lock	47HW7DEU 15R RQE fail secure	626	BE
1	Core	Uncombinated Core w/2 Keys		
1	Door Closer	4040XP REG	AL	LC
1	Kickplate	K1050 10" x 2" LDW 4B3 CSK	US32D	RO
1	Wall Stop	409	US32D	RO
3	Silencer	608		RO
1	Position Switch	DPS		SU
1	iClass Reader	R40 Reader 6120		HD
1	Power Supply	BPS-24-1		SU

Notes: ACCESS BY AUTHORIZED CARD CREDENTIAL OR MANUAL KEY. ALWAYS FREE EGRESS.

Set: 16.0
Doors: 112.0

3	Hinge (heavy weight)	T4A3386 NRP 4-1/2" x 4-1/2"	US32D	MK
1	Rim Exit Device	98EO	US26D	VD
1	Door Closer	4040XP CUSH	AL	LC
1	Threshold	171A		PE
1	Gasketing	S88D		PE
1	Position Switch	DPS		SU

Set: 17.0
Doors: 115.0

1	Continuous Hinge	DSHP01C-84		PE
1	Mortise Lock, behavioral health	SPSL-ML-W10 16F	630	BE
1	Core	Uncombinated Core w/2 Keys		
1	Wall Stop	409	US32D	RO
1	Emergency Stop	ERS84C-NBxHT		PE

Notes: COORDINATE ANY SPECIAL BACKSETS OR TRIM NOTCHING PRIOR TO ODERING MATERIAL. BEHAVORIAL HEALTH SERIES RESCUE HINGE AND EMERGENCY STOP.

Set: 18.0
Doors: 116.0

3	Hinge	TA2714 4-1/2" x 4-1/2"	US26D	MK
1	Cylindrical Lock, storeroom	9K37D 15D S3	626	BE
1	Core	Uncombinated Core w/2 Keys		
1	Wall Stop	409	US32D	RO
3	Silencer	608		RO

Set: 19.0
Doors: 119.0

2	Hinge (heavy weight)	T4A3786 NRP 4-1/2" x 4-1/2"	US26D	MK
1	Hinge (heavy weight)	T4A3786 CC8 4-1/2" x 4-1/2"	US26D	MK
1	Electrified Mortise Lock	47HW7DEU 15R RQE fail secure	626	BE
1	Core	Uncombinated Core w/2 Keys		
1	Door Closer	4040XP EDA	AL	LC
1	Kickplate	K1050 10" x 2" LDW 4B3 CSK	US32D	RO
1	Wall Stop	409	US32D	RO
3	Silencer	608		RO
1	Position Switch	DPS		SU
1	iClass Reader	R40 Reader 6120		HD
1	Power Supply	BPS-24-1		SU

Notes: ACCESS BY AUTHORIZED CARD CREDENTIAL OR MANUAL KEY. ALWAYS FREE EGRESS.

Set: 20.0
Doors: 121.0

3	Hinge	TA2714 4-1/2" x 4-1/2"	US26D	MK
1	Cylindrical Lock, privacy	9K30L 15D S3	626	BE
1	Door Closer	4040XP REG	AL	LC
1	Kickplate	K1050 10" x 2" LDW 4B3 CSK	US32D	RO
1	Wall Stop	409	US32D	RO
1	Gasketing	S88D		PE

Set: 21.0
Doors: 123.2

6	Hinge	TA2714 4-1/2" x 4-1/2"	US26D	MK
1	Dust Proof Strike	570	US26D	RO
2	Flush Bolt - HM	555	US26D	RO
1	Cylindrical Lock, classroom	9K37R 15D S3	626	BE
1	Core	Uncombinated Core w/2 Keys		
2	Surface Overhead Stop	10-X36	630	RF
2	Door Closer	4040XP REG	AL	LC
2	Silencer	608		RO

Notes: Z ASTRAGAL TO BE PROVIDED BY HOLLOW METAL DOOR SUPPLIER.

Set: 22.0
Doors: 123.3

3 Hinge	TA2714 4-1/2" x 4-1/2"	US26D	MK
1 Cylindrical Lock, classroom	9K37R 15D S3	626	BE
1 Core	Uncombinated Core w/2 Keys		
1 Surface Closer	4040XPT-Pull BUMPER	AL	LC
3 Silencer	608		RO

Set: 23.0
Doors: 125.3, 126.2, S100

3 Hinge	TA2714 NRP 4-1/2" x 4-1/2"	US26D	MK
1 Cylindrical Lock, classroom	9K37R 15D S3	626	BE
1 Core	Uncombinated Core w/2 Keys		
1 Door Closer	4040XP CUSH	AL	LC
1 Gasketing	S88D		PE

Set: 24.0
Doors: 126.1

3 Hinge	TA2714 4-1/2" x 4-1/2"	US26D	MK
1 Cylindrical Lock, classroom	9K37R 15D S3	626	BE
1 Core	Uncombinated Core w/2 Keys		
1 Surface Overhead Stop	10-X36	630	RF
3 Silencer	608		RO

Set: 25.0
Doors: 126.2

6 Hinge (heavy weight)	T4A3786 NRP 4-1/2" x 4-1/2"	US26D	MK
1 Surface Vert Rod Exit	9827EO	US26D	VD
1 Surface Vert Rod Exit	9827L 996L(Std)	US26D	VD
1 Core	Uncombinated Core w/2 Keys		
1 Cylinder, rim	1E-72	626	BE
2 Door Closer	4040XP CUSH	AL	LC
1 Gasketing	S88D		PE

Set: 26.0
Doors: 128.0

6 Hinge	TA2314 NRP 4-1/2" x 4-1/2"	US32D	MK
1 Dust Proof Strike	570	US26D	RO
2 Flush Bolt - HM	555	US26D	RO
1 Cylindrical Lock, storeroom	9K37D 15D S3	626	BE
1 Core	Uncombinated Core w/2 Keys		
1 Surface Overhead Stop	10-X36	630	RF
1 Door Closer	4040XP HCUSH	AL	LC

Notes: Z ASTRAGAL BY HOLLOW METAL DOOR SUPPLIER.

Set: 27.0
Doors: 129.2

2	Continuous Hinge	CFMHD1		PE
1	Core	Uncombinated Core w/2 Keys		
1	Cylinder, mortise	1E-74	626	BE
2	Push Bar & Pull	BF15847	US32D	RO
1	Spacer	4040XP-61	AL	LC
1	Door Closer	4040XP EDA	AL	LC
1	Door Operator	SW100 (includes Actuator Switches)	689	BE
2	Wall Stop	409	US32D	RO
1	Set Weatherstrip	by Door Manufacturer		
1	Astragal Set	by Door Manufacturer		00
1	Keyswitch	MKA		SU

Notes: SEQUENCE OPERATION WITH EXTERIOR VESTIBULE DOOR AS DIRECTED BY OWNER. KEYSWTICH TO TURN OPERATOR ON/OFF FOR MAINTENANCE/SERVICE.

Set: 28.0
Doors: 130.1, 142.1

3	Hinge (heavy weight)	T4A3786 4-1/2" x 4-1/2"	US26D	MK
1	Rim Exit Device	98L-BE 996L-BE	US26D	VD
1	Door Closer	4040XP CUSH	AL	LC
1	Kickplate	K1050 10" x 2" LDW 4B3 CSK	US32D	RO
1	Gasketing	S88D		PE

Set: 29.0
Doors: 133.2

3	Hinge (heavy weight)	T4A3386 CC8 4-1/2" x 4-1/2"	US32D	MK
3	Hinge (heavy weight)	T4A3386 4-1/2" x 4-1/2"	US32D	MK
1	Electrified Mortise Lock	47HW7DEU 15R RQE fail secure	626	BE
1	Core	Uncombinated Core w/2 Keys		
1	Door Closer	4040XP REG	AL	LC
1	Wall Stop	409	US32D	RO
1	Threshold	171A		PE
1	Gasketing	S88D		PE
1	Position Switch	DPS		SU
1	iClass Reader	R40 Reader 6120		HD
1	Power Supply	BPS-24-1		SU

Notes: ACCESS BY AUTHORIZED CARD CREDENTIAL OR MANUAL KEY. ALWAYS FREE EGRESS.

Set: 30.0
Doors: 134.0, S102

3	Hinge	TA2714 4-1/2" x 4-1/2"	US26D	MK
1	Cylindrical Lock, classroom	9K37R 15D S3	626	BE
1	Core	Uncombinated Core w/2 Keys		
1	Door Closer	4040XP REG	AL	LC
1	Wall Stop	409	US32D	RO
3	Silencer	608		RO

Set: 31.0
Doors: 138.0, 140.0, 217.0, 218.0

3	Hinge (heavy weight)	T4A3786 4-1/2" x 4-1/2"	US26D	MK
1	Push Plate	70C	US32D	RO
1	Pull Plate	110x70C	US32D	RO
1	Door Closer	4040XP REG	AL	LC
1	Wall Stop	409	US32D	RO
1	Gasketing	S88D		PE

Set: 32.0
Doors: 141.3

3	Hinge	TA2714 NRP 4-1/2" x 4-1/2"	US26D	MK
1	Cylindrical Lock, classroom	9K37R 15D S3	626	BE
1	Core	Uncombinated Core w/2 Keys		
1	Door Closer	4040XP EDA	AL	LC
1	Wall Stop	409	US32D	RO
1	Gasketing	S88D		PE

Set: 33.0
Doors: 143.0, 203.0

3	Hinge	TA2714 NRP 4-1/2" x 4-1/2"	US26D	MK
1	Cylindrical Lock, storeroom	9K37D 15D S3	626	BE
1	Core	Uncombinated Core w/2 Keys		
1	Door Closer	4040XP EDA	AL	LC
1	Wall Stop	409	US32D	RO
1	Gasketing	S88D		PE

Set: 34.0
Doors: 144.0

3	Hinge	TA2714 NRP 4-1/2" x 4-1/2"	US26D	MK
1	Triology Proximity Lockset	PDL30200 B	26D	AL
1	Core	Uncombinated Core w/2 Keys		
1	Door Closer	4040XP HCUSH	AL	LC
1	Kickplate	K1050 10" x 2" LDW 4B3 CSK	US32D	RO
3	Silencer	608		RO

Notes: ACCESS BY AUTHORIZED CODE OR MANUAL KEY. ALWAYS FREE EGRESS.

Set: 35.0
Doors: 145.0

3	Hinge	TA2714 NRP 4-1/2" x 4-1/2"	US26D	MK
1	Triology Proximity Lockset	PDL30200 B	26D	AL
1	Core	Uncombinated Core w/2 Keys		
1	Door Closer	4040XP EDA	AL	LC
1	Kickplate	K1050 10" x 2" LDW 4B3 CSK	US32D	RO
1	Wall Stop	409	US32D	RO
1	Gasketing	S88D		PE

Notes: ACCESS BY AUTHORIZED CODE OR MANUAL KEY. ALWAYS FREE EGRESS.

Set: 36.0
Doors: 146

2	Continuous Hinge	CFMHD1 PT		PE

1	Surface Vert Rod Exit	EL RX 9827L 06 LBR 996L(Std)	US26D	VD
1	Surface Vert Rod Exit	RX 9827L-DT LBR 996L-DT	US26D	VD
1	Core	Uncombinated Core w/2 Keys		
1	Cylinder, rim	1E-72	626	BE
2	Door Closer	4040XP EDA	AL	LC
2	Kickplate	K1050 10" x 2" LDW 4B3 CSK	US32D	RO
2	Wall Stop	409	US32D	RO
1	Gasketing	S88D		PE
1	Astragal	S772D		PE
2	Electric Power Transfer	EPT10	SP28	VD
2	Position Switch	DPS		SU
1	iClass Reader	R40 Reader 6120		HD
1	Power Supply	PS914		VD

Notes: ACCESS BY AUTHORIZED CARD CREDENTIAL OR MANUAL KEY. ALWAYS FREE EGRESS.

Set: 37.0
Doors: 130.2, 142.2

3	Hinge (heavy weight)	T4A3786 4-1/2" x 4-1/2"	US26D	MK
1	Rim Exit Device	98L-BE 996L-BE	US26D	VD
1	Door Closer	4040XP REG	AL	LC
1	Kickplate	K1050 10" x 2" LDW 4B3 CSK	US32D	RO
1	Wall Stop	409	US32D	RO
1	Gasketing	S88D		PE

Set: 38.0
Doors: 201.0

2	Hinge (heavy weight)	T4A3786 NRP 4-1/2" x 4-1/2"	US26D	MK
1	Hinge (heavy weight)	T4A3786 CC8 4-1/2" x 4-1/2"	US26D	MK
1	Electrified Mortise Lock	47HW7TWEL 15R fail safe	626	BE
1	Core	Uncombinated Core w/2 Keys		
1	Surface Closer	4040XPT-Pull BUMPER	AL	LC
1	Kickplate	K1050 10" x 2" LDW 4B3 CSK	US32D	RO
3	Silencer	608		RO
1	Position Switch	DPS		SU
1	iClass Reader	R40 Reader 6120		HD
1	Power Supply	BPS-24-1		SU

Notes: ACCESS BY AUTHORIZED CARD CREDENTIAL OR MANUAL KEY. ACCESS CONTROL IN/OUT. FAIL SAFE.

Set: 39.0
Doors: 202.0

3	Hinge	TA2714 4-1/2" x 4-1/2"	US26D	MK
1	Cylindrical Lock, passage	9K30N 15D S3	626	BE
1	Door Closer	4040XP CUSH	AL	LC
1	Kickplate	K1050 10" x 2" LDW 4B3 CSK	US32D	RO
1	Gasketing	S88D		PE

Set: 40.0
Doors: 223B

1	Cylindrical Lock, storeroom	9K37D 15D S3	626	BE

1 Core	Uncombinated Core w/2 Keys		

Notes: ALL REMAINING TO BE PROVIDED BY DOOR PROVIDER.

Set: 41.0
Doors: 205.0

3 Hinge	TA2314 4-1/2" x 4-1/2"	US32D	MK
1 Cylindrical Lock, storeroom	9K37D 15D S3	626	BE
1 Core	Uncombinated Core w/2 Keys		
1 Wall Stop	409	US32D	RO
1 Gasketing	S88D		PE

Set: 42.0
Doors: 214.0, 221.0, 222.0

3 Hinge	TA2714 4-1/2" x 4-1/2"	US26D	MK
1 Cylindrical Lock, passage	9K30N 15D S3	626	BE
1 Door Closer	4040XP CUSH	AL	LC
1 Gasketing	S88D		PE

Set: 43.0
Doors: 210.0

3 Hinge	TA2714 4-1/2" x 4-1/2"	US26D	MK
1 Cylindrical Lock, classroom	9K37R 15D S3	626	BE
1 Core	Uncombinated Core w/2 Keys		
1 Door Closer	4040XP H	AL	LC
1 Kickplate	K1050 10" x 2" LDW 4B3 CSK	US32D	RO
1 Wall Stop	409	US32D	RO
1 Gasketing	S88D		PE

Set: 44.0
Doors: 212.0

6 Hinge (heavy weight)	T4A3786 4-1/2" x 4-1/2"	US26D	MK
1 Dust Proof Strike	570	US26D	RO
1 Auto Flush Bolt WD	2845	US26D	RO
1 Cylindrical Lock, passage	9K30N 15D S3	626	BE
1 Coordinator	2600	Black	RO
2 Mounting Bracket	2601 Mounting Brackets	Black	RO
2 Door Closer	4040XP CUSH	AL	LC
2 Kickplate	K1050 10" x 2" LDW 4B3 CSK	US32D	RO
1 Gasketing	S88D		PE
1 Astragal	S772D		PE

END OF SECTION 087100

SECTION 087113 - AUTOMATIC DOOR OPERATORS

PART 1 - GENERAL

1.1 RELATED DOCUMENTS

A. Drawings and general provisions of the Contract, including General and Supplementary Conditions and Division 01 Specification Sections, apply to this Section.

1.2 SUMMARY

A. Section Includes:

1. Low energy automatic door operators for swinging doors.

B. Related Sections:

1. Division 08 Section “Door Schedule”.
2. Division 08 Section “Hollow Metal Doors and Frames”.
3. Division 08 Section “Flush Wood Doors”.
4. Division 08 Section “Door Hardware”.
5. Division 08 Section “Access Control Hardware”.
6. Division 26 Section “Electrical”.

A. Codes and Standards: Comply with the version year adopted by the Authority Having Jurisdiction.

1. ANSI A117.1 - Accessible and Usable Buildings and Facilities.
2. ANSI/BHMA A156.4 - Door Controls, Door Closers.
3. ANSI/BHMA A156.19 - Power Assist and Low-Energy Power Operated Doors.
4. ICC/IBC - International Building Code.
5. NFPA 70 - National Electrical Code.
6. NFPA 80 - Fire Doors and Windows.
7. NFPA 101 - Life Safety Code.
8. NFPA 105 - Installation of Smoke Door Assemblies.
9. UL/ULC and CSA C22.2 – Standards for Automatic Door Operators Used on Fire and Smoke Barrier Doors and Systems of Doors.
10. UL 325 - Door, Drapery, Gate, Louver, and Window Operators and Systems.
11. State Building Codes, Local Amendments.

1.3 PERFORMANCE REQUIREMENTS

A. Automatic door operators to be used on interior or exterior doors; up to 200 pounds (91 kg) weight and maximum door width of 48" (1219 mm).

1. Auto door operator capable of operating within temperature ranges of -22°F (-30°C) and 122°F (50°C).

1.4 SUBMITTALS

A. Product Data: Manufacturer's product data sheets including installation details, material descriptions, dimensions of individual components and profiles, and finishes for automatic door operators, including activation devices. Include operating characteristics, electrical characteristics, and furnished accessories.

B. Shop Drawings: Include details and attachments to other work.

1. Include locations and elevations of each unique entrance showing activation devices.
2. Indicate required clearances, components, and location and size of field connections.
3. Wiring Diagrams: For power, signal, and activation wiring.

C. Qualification Data: Provide copy of manufacturer's official certification or accreditation document indicating proof of status as a qualified and authorized installer of automatic door operators and accessories.

D. Operating and Maintenance Manuals: Provide manufacturer's operating and maintenance manual for each item comprising the automatic door operator installation in quantity as required in Division 01, Closeout Submittals. The manual to include the name, address, and contact information of the manufacturer and Installer providing the operators and installation. The final copies delivered after completion of the installation test to include "as built" modifications made during installation, checkout, and acceptance.

E. Warranties and Maintenance: Special warranties and maintenance agreements specified in this Section.

1.5 QUALITY ASSURANCE

A. Installer Qualifications: Manufacturer's authorized representative who is trained and approved for installation and maintenance of units required for this Project.

B. Certified Installer Qualifications: Locally certified ASSA ABLOY Power Operator Preferred Installer required for the installation and maintenance of the automatic door operator units and accessories indicated for the Project.

C. Source Limitations: Obtain automatic door operators, including activation devices, from single source, qualified supplier unless otherwise indicated.

D. Electrical Components, Devices, and Accessories: Listed and labeled as defined in NFPA 70, by a testing agency, and marked for intended location and application.

E. Exit Door Requirements: Comply with requirements of authorities having jurisdiction for doors with automatic door operators serving as a component of a required means of egress.

F. Fire Rated Door Assemblies: Provide operators for fire rated door assemblies that are listed and labeled by a testing and inspecting agency acceptable to authorities having jurisdiction for use on types and sizes of labeled fire doors required.

G. Pre-Submittal Conference: Conduct coordination conference in compliance with requirements in Division 01 Section "Project Meetings" with attendance by representatives of Supplier, Installer, and Contractor to review proper methods and the procedures for receiving, handling, and installing automatic door operators.

1. Prior to installation of automatic door operators, arrange for certified Installer's representative to conduct a project specific meeting to review the installation and maintenance of their respective products. Project meeting to be attended by representatives of related trades furnishing and installing the aluminum, hollow metal and wood doors sections.
2. Review and finalize construction schedule and verify availability of materials.

1.6 COORDINATION

A. Electrical Systems Coordination: Coordinate the layout and installation of scheduled automatic door operators and related activation devices, with required connections to source power junction boxes, remote power supplies, access control equipment, detection and monitoring hardware, and fire alarm system.

B. Templates: Obtain and distribute to the parties involved, templates for doors, frames, operators, and other work specified to be factory prepared and reinforced for installing automatic door operators. Check Shop Drawings of other work to confirm that adequate provisions are made for locating and installing automatic door operators to comply with indicated requirements.

C. Door and Frame Preparation: Related Division 08 Sections (Steel, Aluminum and Wood) doors and corresponding frames are to be prepared, reinforced and pre-wired (if applicable) to receive the installation of the specified automatic door operators without additional in-field modifications.

1.7 WARRANTY

A. General Warranty: Reference Division 01, General Requirements. Special warranties specified in this Article shall not deprive Owner of other rights Owner may have under other provisions of the Contract Documents and shall be in addition to, and run concurrent with, other warranties made by Contractor under requirements of the Contract Documents.

B. Special Warranty: Written warranty, executed by manufacturer, agreeing to repair or replace components of automatic door operators that fail in materials or workmanship within specified warranty period after final acceptance by Owner. Failures include, but are not limited to, the following:

1. Faulty or sporadic operation of automatic door operator, including activation and safety devices.
2. Deterioration of metals, metal finishes, and other materials beyond normal weathering or use.

C. Special Warranty Period: Two years from date of Substantial Completion.

D. Provide extended warranty from defects in material or workmanship under normal use for a period of 3 years from the date of substantial completion for units installed by a certified ASSA ABLOY Power Operator Preferred Installer in accordance with the manufacturer's written warranty certificate.

1.8 MAINTENANCE SERVICE

A. Maintenance Service: Beginning at Substantial Completion, and running concurrent with the specified warranty period, provide continuous (6) months full maintenance by skilled employees of automatic door operator Installer. Include planned and preventive maintenance, repair or

replacement of worn or defective components, lubrication, cleaning, and adjusting as required for proper door operation. Provide parts and supplies the same as those used in the manufacture and installation of original equipment.

B. Extended Maintenance Support and Service Agreement: Submit for Owner's consideration an optional extended Service Agreement for the installed automatic door operator system. The extended Service Agreement is considered elective and is without manufacturer's requirement stipulating mandatory coverage for owner and/or vendor system support.

1. A published copy of this agreement to be included with the submittal package
2. Support for the installed automatic door operator system is provided through the vendor under a specified, limited 24 hour support program.
3. Automatic door operators and components are to be available on a one-day turn around time frame from the vendor.

PART 2 - PRODUCTS

2.1 ELECTROMECHANICAL DOOR OPERATORS – GENERAL

A. General: Provide low energy operators of size recommended by manufacturer for door size, weight, and movement; for condition of exposure; and for compliance with UL 325. Coordinate operator mechanisms with door operation, hinges, and activation devices.

1. Fire-Rated Doors: Provide door operators for fire-rated door assemblies that comply with NFPA 80 for fire-rated door components and are listed and labeled by a qualified testing agency.

B. Standard: Certified ANSI/BHMA A156.19.

C. Performance Requirements:

1. Opening Force if Power Fails: Not more than 15 lbf required to release a latch if provided, not more than 30 lbf required to manually set door in motion, and not more than 15 lbf required to fully open door.
2. Entrapment Protection: Not more than 15 lbf required to prevent stopped door from closing or opening.

D. Configuration: Surface mounted or in-ground as required. Door operators to control single swinging and pair of swinging doors.

E. Operation: Power opening and spring closing operation capable of meeting ANSI A117.1 accessibility guideline. Provide time delay for door to remain open before initiating closing cycle as required by ANSI/BHMA A156.19.

F. Features: Operator units to have full feature adjustments for door opening and closing force and speed, backcheck, motor assist acceleration from 0 to 30 seconds, time delay, vestibule interface delay, obstruction recycle, and hold open time from 0 up to 30 seconds.

G. Provide outputs and relays on board the operator to allow for coordination of exit device latch retraction, electric strikes, magnetic locks, card readers, safety and motion sensors and specified auxiliary contacts.

H. Brackets and Reinforcements: Manufacturer's standard, fabricated from aluminum with nonferrous shims for aligning system components.

I. Acceptable Manufacturers: Subject to compliance with requirements, provide products by one of the following:

1. Besam Automated Entrance Systems (BE) - SW100 Series.
2. Horton Automatics (HO) - 7000 Series.
3. LCN Closers (LC) - 9100 Series.

2.2 LOW ENERGY DOOR OPERATORS

A. Standard: Certified ANSI/BHMA A156.19.

1. Performance Requirements:

a. Opening Force if Power Fails: Not more than 15 lbf required to release a latch if provided, not more than 30 lbf required to manually set door in motion, and not more than 15 lbf required to fully open door.
b. Entrapment Protection: Not more than 15 lbf required to prevent stopped door from closing or opening.

B. Configuration: Surface mounted or in-ground as required. Door operators to control single swinging and pair of swinging doors.

C. Operation: Power opening and spring closing operation capable of meeting ANSI A117.1 accessibility guideline. Provide time delay for door to remain open before initiating closing cycle as required by ANSI/BHMA A156.19. When not in automatic mode, door operator to function as manual door closer with fully adjustable opening and closing forces, with or without electrical power.

D. Features: Operator units to have full feature adjustments for door opening and closing force and speed, backcheck, motor assist acceleration from 0 to 30 seconds, time delay, vestibule interface delay, obstruction recycle, and hold open time from 0 up to 30 seconds.

1. Provide outputs and relays on board the operator to allow for coordination of exit device latch retraction, electric strikes, magnetic locks, card readers, safety and motion sensors and specified auxiliary contacts.

2.3 ACTIVATION DEVICES

A. General: Provide activation devices in accordance with ANSI/BHMA A156.19 standard, for condition of exposure indicated and for long term, maintenance free operation under normal traffic load operation. Coordinate activation control with electrified hardware and access control interfaces. Activation switches are standard SPST, with optional DPDT availability.

B. Push-Plate Switch: Momentary contact door control switch with push-plate actuator.

1. Configuration: Square or round push-plate control switch with single or double gang junction box mounting. Provide narrow profile face plate where indicated for jamb or mullion mounting.

a. Mounting Location: As indicated on Drawings.

2. Push-Plate Material: Stainless steel.
3. Message: International symbol of accessibility with "Push (Press) to Open (Operate)" text.
4. Acceptable Manufacturers:

    a. Alarm Controls (AK) – JP1 Series.
    b. BEA Sensors (BS) – PBS45 Series.
    c. Camden Door Controls (CM) – CM45/46 Series.
    d. Norton Door Controls (NO) – 500 Series.
    e. Wikk Industries (WI) – 4x4 Series.
    f. {Other}

C. Key Switch: Key controlled actuator device enclosed in single or double gang junction box.

1. Faceplate Material: Stainless steel.
2. Functions: On-off, maintained contact.
3. Two-way Mounting: Recess or surface mounting as indicated on Drawings.
4. Acceptable Manufacturers:

    a. Alarm Controls (AK) – MCK Series.
    b. Securitron (SU) – MKA Series.
    c. Wikk Industries (WI) – KS Series.

2.4 ACCESSORIES

A. Signage: As required by cited ANSI/BHMA A156.19 standard for the type of operator.

2.5 FINISHES

A. Standard: Designations used to indicate hardware finishes complying with ANSI/BHMA A156.18, including coordination with traditional U.S. finishes indicated by certain manufacturers for their products.

B. Provide quality of finish, including thickness of plating or coating (if any), composition, hardness, and other qualities complying with manufacturer's standards, but in no case less than specified by referenced standards for the applicable units of hardware. Units will be sprayed with a combination of waterborne acrylic and polyester powder coat.

C. Protect mechanical finishes on exposed surfaces from damage by applying a strippable, temporary protective covering before shipping.

PART 3 - EXECUTION

3.1 EXAMINATION

A. Examine conditions, with Installer present, for compliance with requirements for installation tolerances, door and frame preparation and reinforcements, power connections, electrical systems interfaces, and other conditions affecting performance of automatic door operators.

B. Notify architect of any discrepancies or conflicts between the door schedule, door types, drawings and scheduled hardware. Proceed only after such discrepancies or conflicts have been resolved in writing.

3.2 INSTALLATION

A. General: Install complete automatic door operators according to manufacturer's written instructions and ANSI/BHMA A156;19 standard, including activation devices, control wiring, remote power units if any, connection to the building's fire alarm system, and required signage.

B. Power Connection: Reference Division 26 "Electrical" Sections for connection to electrical power distribution system.

C. Access Control System: Coordinate connections and operation with access control system

D. Signage: Apply signage as required by ANSI/BHMA A156.19 standard for type of door operator and direction of pedestrian travel.

3.3 FIELD QUALITY CONTROL

A. Inspection: Certified Installer' representative to inspect and test automatic door operators to determine compliance of installed systems with specifications and ANSI/BHMA A146.19 standard. Report discrepancies in writing to Architect and Contractor within 24 hours after inspection.

3.4 ADJUSTING

A. Comply with requirements of ANSI/BHMA A156.19 standard. Adjust automatic door operators to function smoothly, and lubricate as recommended by manufacturer.

3.5 DEMONSTRATION

A. Certified Installer's representative to provide eight (8) hours of training to Owner's maintenance personnel in the proper adjustment, operation, and maintenance of automatic door operators.

END OF SECTION 087113

SECTION 08 8000 - GLAZING

PART 1 - GENERAL

1.1 RELATED DOCUMENTS

A. Drawings and general provisions of the Contract, including General and Supplementary Conditions and Division 01 Specification Sections, apply to this Section.

1.2 SUMMARY

A. Section includes glazing for the following products and applications, including those specified in other Sections where glazing requirements are specified by reference to this Section:

1. Windows.
2. Doors.
3. Storefront framing.
4. Glazed entrances.
5. Glazed aluminum curtain walls.
6. Interior borrowed lites.

1.3 Related Sections include the following:

1. Section 064023 "Interior Architectural Woodwork", for display case glass doors.

1.4 DEFINITIONS

A. Glass Manufacturers: Firms that produce primary glass, fabricated glass, or both, as defined in referenced glazing publications.

B. Glass Thicknesses: Indicated by thickness designations in millimeters according to ASTM C 1036.

C. Interspace: Space between lites of an insulating-glass unit.

1.5 PERFORMANCE REQUIREMENTS

A. General: Installed glazing systems shall withstand normal thermal movement and wind and impact loads (where applicable) without failure, including loss or glass breakage attributable to the following: defective manufacture, fabrication, or installation; failure of sealants or gaskets to remain watertight and airtight; deterioration of glazing materials; or other defects in construction.

B. Delegated Design: Design glass, including comprehensive engineering analysis according to ICC's 2003 International Building Code by a qualified professional engineer, using the following design criteria:

1. Design Wind Pressures: As indicated on Drawing Sheet S1.0.
2. Glass Type Factors for Wired, Patterned, and Sandblasted Glass:

a. Short-Duration Glass Type Factor for Wired Glass: 0.5.
b. Long-Duration Glass Type Factor for Wired Glass: 0.3.

3. Maximum Lateral Deflection: For glass supported on all four edges, limit center-of-glass deflection at design wind pressure to not more than 1/50 times the short-side length or 1 inch (25 mm), whichever is less.
4. Differential Shading: Design glass to resist thermal stresses induced by differential shading within individual glass lites.
5. Structural Loads:

a. Blast Loads: Designed to meet UFC 4-010-01, dated October 8, 2003 including Change 1, dated January 22, 2007 including Appendix B-3.1, Standard 10:

1) Applicable Explosive Weight: I.
2) Conventional Standoff Distance: 45m- (148 ft.).
3) Location: Parking and Roadways without a Controlled Perimeter
4) Building Category: Primary Gathering Building.

6. Thermal Movements: Allow for thermal movements from ambient and surface temperature changes acting on glass framing members and glazing components.

a. Temperature Change: 120 deg F (67 deg C), ambient; 180 deg F (100 deg C), material surfaces.

1.6 SUBMITTALS

A. Product Data: For each glass product and glazing material indicated.

B. Glass Samples: For each type of glass product other than clear monolithic vision glass; 12 inches (300 mm) square.

1. Laminated glass with clear interlayer.
2. Insulating glass.

C. Glazing Accessory Samples: For gaskets, in 12-inch (300-mm) lengths. Install sealant Samples between two strips of material representative in color of the adjoining framing system.

D. Glazing Schedule: List glass types and thicknesses for each size opening and location. Use same designations indicated on Drawings.

E. Delegated-Design Submittal: For glass indicated to comply with performance requirements and design criteria, including analysis data signed and sealed by the qualified professional engineer responsible for their preparation.

F. Qualification Data: For installers.

G. Product Certificates: For glass and glazing products, from manufacturer.

H. Product Test Reports: Based on evaluation of comprehensive tests performed by a qualified testing agency, for glazing gaskets.

1. For glazing sealants, provide test reports based on testing current sealant formulations within previous 36-month period.

1.7 QUALITY ASSURANCE

A. Manufacturer Qualifications for Insulating-Glass Units with Sputter-Coated, Low-E Coatings: A qualified insulating-glass manufacturer who is approved and certified by coated-glass manufacturer.

B. Installer Qualifications: A qualified installer who employs glass installers for this Project who are certified under the National Glass Association's Certified Glass Installer Program.

C. Glass Testing Agency Qualifications: A qualified independent testing agency accredited according to the NFRC CAP 1 Certification Agency Program.

D. Source Limitations for Glass: Obtain tinted float glass, coated float glass, laminated glass, and insulating glass from single source from single manufacturer for each glass type.

E. Source Limitations for Glazing Accessories: Obtain from single source from single manufacturer for each product and installation method.

F. Glazing Publications: Comply with published recommendations of glass product manufacturers and organizations below, unless more stringent requirements are indicated. Refer to these publications for glazing terms not otherwise defined in this Section or in referenced standards.

1. GANA Publications: GANA's "Laminated Glazing Reference Manual" and GANA's "Glazing Manual."
2. IGMA Publication for Insulating Glass: SIGMA TM-3000, "North American Glazing Guidelines for Sealed Insulating Glass Units for Commercial and Residential Use."

G. Safety Glazing Labeling: Where safety glazing labeling is indicated, permanently mark glazing with certification label of the SGCC or another certification agency acceptable to authorities having jurisdiction or the manufacturer. Label shall indicate manufacturer's name, type of glass, thickness, and safety glazing standard with which glass complies.

H. Insulating-Glass Certification Program: Permanently marked either on spacers or on at least one component lite of units with appropriate certification label of IGCC.

1.8 DELIVERY, STORAGE, AND HANDLING

A. Protect glazing materials according to manufacturer's written instructions. Prevent damage to glass and glazing materials from condensation, temperature changes, direct exposure to sun, or other causes.

B. Comply with insulating-glass manufacturer's written recommendations for venting and sealing units to avoid hermetic seal ruptures due to altitude change.

1.9 PROJECT CONDITIONS

A. Environmental Limitations: Do not proceed with glazing when ambient and substrate temperature conditions are outside limits permitted by glazing material manufacturers and when glazing channel substrates are wet from rain, frost, condensation, or other causes.

1. Do not install glazing sealants when ambient and substrate temperature conditions are outside limits permitted by sealant manufacturer or below 40 deg F (4.4 deg C).

1.10 WARRANTY

A. Manufacturer's Special Warranty for Coated-Glass Products: Manufacturer's standard form in which coated-glass manufacturer agrees to replace coated-glass units that deteriorate within specified warranty period. Deterioration of coated glass is defined as defects developed from normal use that are not attributed to glass breakage or to maintaining and cleaning coated glass contrary to manufacturer's written instructions. Defects include peeling, cracking, and other indications of deterioration in coating.

1. Warranty Period: 10 years from date of Final Completion Certificate issuance.

B. Manufacturer's Special Warranty on Laminated Glass: Manufacturer's standard form in which laminated-glass manufacturer agrees to replace laminated-glass units that deteriorate within specified warranty period. Deterioration of laminated glass is defined as defects developed from normal use that are not attributed to glass breakage or to maintaining and cleaning laminated glass contrary to manufacturer's written instructions. Defects include edge separation, delamination materially obstructing vision through glass, and blemishes exceeding those allowed by referenced laminated-glass standard.

1. Warranty Period: 10 years from date of Final Completion Certificate issuance.

C. Manufacturer's Special Warranty on Insulating Glass: Manufacturer's standard form in which insulating-glass manufacturer agrees to replace insulating-glass units that deteriorate within specified warranty period. Deterioration of insulating glass is defined as failure of hermetic seal under normal use that is not attributed to glass breakage or to maintaining and cleaning insulating glass contrary to manufacturer's written instructions. Evidence of failure is the obstruction of vision by dust, moisture, or film on interior surfaces of glass.

1. Warranty Period: 10 years from date of Final Completion Certificate issuance.

PART 2 - PRODUCTS

2.1 GLASS PRODUCTS, GENERAL

A. Thickness: Where glass thickness is indicated, it is a minimum. Provide glass lites in thicknesses as needed to comply with requirements indicated.

1. Minimum Glass Thickness for Exterior Lites: Not less than 6.0 mm.

B. Strength: Where float glass is indicated, provide annealed float glass, Kind HS heat-treated float glass, or Kind FT heat-treated float glass as needed to comply with "Performance Requirements" Article. Where heat-strengthened glass is indicated, provide Kind HS heat-treated float glass or Kind FT heat-treated float glass as needed to comply with "Performance Requirements" Article. Where fully tempered glass is indicated, provide Kind FT heat-treated float glass.

C. Thermal and Optical Performance Properties: Provide glass with performance properties specified, as indicated in manufacturer's published test data, based on procedures indicated below:

1. For monolithic-glass lites, properties are based on units with lites 6.0 mm thick.

2. For laminated-glass lites, properties are based on products of construction indicated.
3. For insulating-glass units, properties are based on units of thickness indicated for overall unit and for each lite.
4. U-Factors: Center-of-glazing values, according to NFRC 100 and based on LBL's WINDOW 5.2 computer program, expressed as Btu/sq. ft. x h x deg F (W/sq. m x K).
5. Solar Heat-Gain Coefficient and Visible Transmittance: Center-of-glazing values, according to NFRC 200 and based on LBL's WINDOW 5.2 computer program.
6. Visible Reflectance: Center-of-glazing values, according to NFRC 300.

2.2 GLASS PRODUCTS

A. Float Glass: ASTM C 1036, Type I, Quality-Q3, Class I (clear) unless otherwise indicated.

B. Heat-Treated Float Glass: ASTM C 1048; Type I; Quality-Q3; Class I (clear) unless otherwise indicated; of kind and condition indicated.

1. Fabrication Process: By horizontal (roller-hearth) process with roll-wave distortion parallel to bottom edge of glass as installed unless otherwise indicated.
2. For uncoated glass, comply with requirements for Condition A.
3. For coated vision glass, comply with requirements for Condition C (other coated glass).

2.3 LAMINATED GLASS

A. Laminated Glass: ASTM C 1172, and complying with testing requirements in 16 CFR 1201 for Category II materials, and with other requirements specified. Use materials that have a proven record of no tendency to bubble, discolor, or lose physical and mechanical properties after fabrication and installation.

1. Construction: Laminate glass with polyvinyl butyral interlayer to comply with interlayer manufacturer's written recommendations.
2. Interlayer Thickness: Provide thickness not less than that indicated and as needed to comply with requirements.
3. Interlayer Color: Clear unless otherwise indicated.

B. Glass: Comply with applicable requirements in "Glass Products" Article as indicated by designations in "Laminated-Glass Types" Article.

2.4 INSULATING GLASS

A. Insulating-Glass Units: Factory-assembled units consisting of sealed lites of glass separated by a dehydrated interspace, qualified according to ASTM E 2190, and complying with other requirements specified.

1. Sealing System: Dual seal, with manufacturer's standard primary and secondary.
2. Spacer: Manufacturer's standard spacer material and construction.

B. Glass: Comply with applicable requirements in "Glass Products" Article and in "Laminated Glass" Article as indicated by designations in "Insulating-Glass Types" Article and in "Insulating-Laminated-Glass Types" Article.

2.5 GLAZING GASKETS

A. Dense Compression Gaskets: Molded or extruded gaskets of profile and hardness required to maintain watertight seal, made from one of the following:

1. Neoprene complying with ASTM C 864.
2. EPDM complying with ASTM C 864.
3. Silicone complying with ASTM C 1115.
4. Thermoplastic polyolefin rubber complying with ASTM C 1115.

2.6 MISCELLANEOUS GLAZING MATERIALS

A. General: Provide products of material, size, and shape complying with referenced glazing standard, requirements of manufacturers of glass and other glazing materials for application indicated, and with a proven record of compatibility with surfaces contacted in installation.

B. Cleaners, Primers, and Sealers: Types recommended by sealant or gasket manufacturer.

C. Setting Blocks: Elastomeric material with a Shore, Type A durometer hardness of 85, plus or minus 5.

D. Spacers: Elastomeric blocks or continuous extrusions of hardness required by glass manufacturer to maintain glass lites in place for installation indicated.

E. Edge Blocks: Elastomeric material of hardness needed to limit glass lateral movement (side walking).

F. Cylindrical Glazing Sealant Backing: ASTM C 1330, Type O (open-cell material), of size and density to control glazing sealant depth and otherwise produce optimum glazing sealant performance.

2.7 FABRICATION OF GLAZING UNITS

A. Fabricate glazing units in sizes required to fit openings indicated for Project, with edge and face clearances, edge and surface conditions, and bite complying with written instructions of product manufacturer and referenced glazing publications, to comply with system performance requirements.

2.8 MONOLITHIC-GLASS

A. Clear fully tempered float glass.

1. Thickness:

a. Typical: 1/4- inch (6.35 mm).

2. Provide safety glazing labeling.

2.9 LAMINATED-GLASS

A. Clear laminated glass with two plies of fully tempered float glass.

1. Thickness of Each Glass Ply: 1/8-inch (3.35 mm).
2. Interlayer Thickness: 0.090 inch (2.29 mm).
3. Provide safety glazing labeling.

2.10 INSULATING-GLASS

A. Clear fully tempered insulating glass.

1. Overall Unit Thickness: 1 inch (25 mm) minimum.
2. Thickness of Each Glass Lite: 1/4-inch (6.35 mm).
3. Outdoor Lite: Clear fully tempered float glass.
4. Interspace Content: Air. ½ inch (12.70 mm) minimum.
5. Indoor Lite: Clear fully tempered, laminated float glass.
6. Low-E Coating: Pyrolytic on surface #3.
7. Transmittance:

    a. Visible Light: 70 percent.
    b. Solar Energy: 33 percent.
    c. UV: 10 percent.

8. Reflectance:

    a. Visible Light – Exterior: 11 percent.
    b. Visible Light – Interior: 12 percent.
    c. Solar Energy: 31 percent.

9. U-Value:

    a. Winter Nighttime: 0.29 Btu/(hr. x sq. ft. x deg. F).
    b. Summer Daytime: 0.26 Btu/(hr. x sq. ft. x deg. F).

10. Shading Coefficient: 0.44.
11. Relative Heat Gain: 91 Btu/hf x sq. ft.
12. Solar Factor (SHGC): 0.30.
13. LSG: 1.85.
14. Provide safety glazing labeling.

PART 3 - EXECUTION

3.1 EXAMINATION

A. Examine framing, glazing channels, and stops, with Installer present, for compliance with the following:

1. Manufacturing and installation tolerances, including those for size, squareness, and offsets at corners.
2. Presence and functioning of weep systems.
3. Minimum required face and edge clearances.

4. Effective sealing between joints of glass-framing members.

B. Proceed with installation only after unsatisfactory conditions have been corrected.

3.2 PREPARATION

A. Clean glazing channels and other framing members receiving glass immediately before glazing. Remove coatings not firmly bonded to substrates.

B. Examine glazing units to locate exterior and interior surfaces. Label or mark units as needed so that exterior and interior surfaces are readily identifiable. Do not use materials that will leave visible marks in the completed work.

3.3 GLAZING, GENERAL

A. Comply with combined written instructions of manufacturers of glass, sealants, gaskets, and other glazing materials, unless more stringent requirements are indicated, including those in referenced glazing publications.

B. Adjust glazing channel dimensions as required by Project conditions during installation to provide necessary bite on glass, minimum edge and face clearances, and adequate sealant thicknesses, with reasonable tolerances.

C. Protect glass edges from damage during handling and installation. Remove damaged glass from Project site and legally dispose of off Project site. Damaged glass is glass with edge damage or other imperfections that, when installed, could weaken glass and impair performance and appearance.

D. Apply primers to joint surfaces where required for adhesion of sealants, as determined by preconstruction testing.

E. Install setting blocks in sill rabbets, sized and located to comply with referenced glazing publications, unless otherwise required by glass manufacturer. Set blocks in thin course of compatible sealant suitable for heel bead.

F. Do not exceed edge pressures stipulated by glass manufacturers for installing glass lites.

G. Provide spacers for glass lites where length plus width is larger than 50 inches (1270 mm).

1. Locate spacers directly opposite each other on both inside and outside faces of glass. Install correct size and spacing to preserve required face clearances, unless gaskets and glazing tapes are used that have demonstrated ability to maintain required face clearances and to comply with system performance requirements.
2. Provide 1/8-inch (3-mm) minimum bite of spacers on glass and use thickness equal to sealant width. With glazing tape, use thickness slightly less than final compressed thickness of tape.

H. Provide edge blocking where indicated or needed to prevent glass lites from moving sideways in glazing channel, as recommended in writing by glass manufacturer and according to requirements in referenced glazing publications.

I. Set glass lites in each series with uniform pattern, draw, bow, and similar characteristics.

J. Set glass lites with proper orientation so that coatings face exterior or interior as specified.

K. Where wedge-shaped gaskets are driven into one side of channel to pressurize sealant or gasket on opposite side, provide adequate anchorage so gasket cannot walk out when installation is subjected to movement.

L. Square cut wedge-shaped gaskets at corners and install gaskets in a manner recommended by gasket manufacturer to prevent corners from pulling away; seal corner joints and butt joints with sealant recommended by gasket manufacturer.

3.4 GASKET GLAZING (DRY)

A. Cut compression gaskets to lengths recommended by gasket manufacturer to fit openings exactly, with allowance for stretch during installation.

B. Installation with Drive-in Wedge Gaskets: Center glass lites in openings on setting blocks and press firmly against soft compression gasket by inserting dense compression gaskets formed and installed to lock in place against faces of removable stops. Start gasket applications at corners and work toward centers of openings. Compress gaskets to produce a weathertight seal without developing bending stresses in glass. Seal gasket joints with sealant recommended by gasket manufacturer.

C. Installation with Pressure-Glazing Stops: Center glass lites in openings on setting blocks and press firmly against soft compression gasket. Install dense compression gaskets and pressure-glazing stops, applying pressure uniformly to compression gaskets. Compress gaskets to produce a weathertight seal without developing bending stresses in glass. Seal gasket joints with sealant recommended by gasket manufacturer.

D. Install gaskets so they protrude past face of glazing stops.

3.5 CLEANING AND PROTECTION

A. Protect exterior glass from damage immediately after installation by attaching crossed streamers to framing held away from glass. Do not apply markers to glass surface. Remove nonpermanent labels and clean surfaces.

B. Protect glass from contact with contaminating substances resulting from construction operations. If, despite such protection, contaminating substances do come into contact with glass, remove substances immediately as recommended in writing by glass manufacturer.

C. Examine glass surfaces adjacent to or below exterior concrete and other masonry surfaces at frequent intervals during construction, but not less than once a month, for buildup of dirt, scum, alkaline deposits, or stains; remove as recommended in writing by glass manufacturer.

D. Remove and replace glass that is broken, chipped, cracked, or abraded or that is damaged from natural causes, accidents, and vandalism, during construction period.

E. Wash glass on both exposed surfaces in each area of Project not more than four days before date scheduled for inspections that establish date of Substantial Completion. Wash glass as recommended in writing by glass manufacturer.

END OF SECTION 08 8000

SECTION 08 8300 - MIRRORS

PART 1 - GENERAL

1.1 RELATED DOCUMENTS

A. Drawings and general provisions of the Contract, including General and Supplementary Conditions and Division 01 Specification Sections, apply to this Section.

1.2 SUMMARY

A. This Section includes the following types of silvered flat glass mirrors.

1. Film-backed glass mirrors qualifying as safety glazing.

B. Related Sections include the following:

1. Division 10 Section "Toilet, Bath, and Laundry Accessories" for metal-framed mirrors.

1.3 DEFINITIONS

A. Deterioration of Mirrors: Defects developed from normal use that are attributable to the manufacturing process and not to causes other than glass breakage and practices for maintaining and cleaning mirrors contrary to mirror manufacturer's written instructions. Defects include discoloration, black spots, and clouding of the silver film.

1.4 PERFORMANCE REQUIREMENTS

A. Provide mirrors that will not fail under normal usage. Failure includes glass breakage and deterioration attributable to defective manufacture, fabrication, and installation.

1.5 SUBMITTALS

A. Product Data: For the following:

1. Mirrors. Include description of materials and process used to produce each type of silvered flat glass mirror specified that indicates sources of glass, glass coating components, edge sealer, and quality-control provisions.
2. Mirror mastic.
3. Mirror hardware.

B. Shop Drawings: Include mirror elevations, edge details, mirror hardware, and attachments to other work.

C. Samples: For each type of mirror product required, in the form indicated below:

1. Mirrors, 12 inches (300 mm) square, including edge treatment on 2 adjoining edges.
2. Mirror trim, 12 inches (300 mm) long.

D. Product Certificates: For each type of mirror and mirror mastic, signed by product manufacturer.

E. Qualification Data: For Installer.

F. Mirror Mastic Compatibility Test Reports: From mirror manufacturer indicating that mirror mastic was tested for compatibility and adhesion with mirror backing paint and substrates on which mirrors are installed.

G. Warranty: Special warranty specified in this Section.

1.6 QUALITY ASSURANCE

A. Installer Qualifications: An experienced installer who has completed mirror glazing similar in material, design, and extent to that indicated for this Project; whose work has resulted in mirror installations with a record of successful in-service performance; and who employs glass installers for this Project who are certified under NGA's Glazier Certification Program as Level 2 (Senior Glaziers) or Level 3 (Master Glaziers).

B. Source Limitations for Mirrors: Obtain mirrors from one source for each type of mirror indicated.

C. Source Limitations for Mirror Glazing Accessories: Obtain mirror glazing accessories from one source for each type of accessory indicated.

D. Glazing Publications: Comply with the following published recommendations:

1. GANA's "Glazing Manual" unless more stringent requirements are indicated. Refer to this publication for definitions of glass and glazing terms not otherwise defined in this Section or in referenced standards.
2. GANA Mirror Division's "Mirrors, Handle with Extreme Care: Tips for the Professional on the Care and Handling of Mirrors."

E. Safety Glazing Products: For tempered mirrors, provide products complying with testing requirements in 16 CFR 1201 for Category II materials.

F. Preconstruction Mirror Mastic Compatibility Test: Submit mirror mastic products to mirror manufacturer for testing to determine compatibility of mastic with mirror backing paint and substrates on which mirrors are installed.

1.7 DELIVERY, STORAGE, AND HANDLING

A. Protect mirrors according to mirror manufacturer's written instructions and as needed to prevent damage to mirrors from condensation, temperature changes, direct exposure to sun, or other causes.

B. Comply with mirror manufacturer's written instructions for shipping, storing, and handling mirrors as needed to prevent deterioration of silvering, damage to edges, and abrasion of glass surfaces and applied coatings. Store indoors, protected from moisture including condensation.

1.8 PROJECT CONDITIONS

A. Environmental Limitations: Do not install mirrors until ambient temperature and humidity conditions are maintained at levels indicated for final occupancy.

1.9 WARRANTY

A. Special Warranty: Manufacturer's standard form, made out to Owner and signed by mirror manufacturer agreeing to replace mirrors that deteriorate as defined in "Definitions" Article, f.o.b. the nearest shipping point to Project site, within specified warranty period indicated below:

1. Warranty Period: Five years from date of Final Completion.

PART 2 - PRODUCTS

2.1 MANUFACTURERS

A. Available Manufacturers: Subject to compliance with requirements, manufacturers offering mirrors that may be incorporated into the Work include, but are not limited to, the following:

1. Arch Aluminum & Glass Co., Inc.
2. Gardner Glass Products.
3. Gilded Mirrors, Inc.
4. Guardian Industries Corp.
5. Independent Mirror Industries, Inc.
6. Lenoir Mirror Company.
7. Messer Industries, Inc.
8. Stroupe Mirror Co., Inc.
9. Sunshine Mirror.
10. Virginia Mirror Company, Inc.
11. VVP America, Inc.; Binswanger Mirror Products.
12. Walker Glass Co., Ltd.

2.2 SILVERED FLAT GLASS MIRROR MATERIALS

A. Clear Glass: Mirror Glazing Quality.

1. Nominal Thickness: 6.0 mm.

2.3 MISCELLANEOUS MATERIALS

A. Setting Blocks: Elastomeric material with a Type A Shore durometer hardness of 85, plus or minus 5.

B. Mirror Mastic: An adhesive setting compound, produced specifically for setting mirrors and certified by both mirror manufacturer and mastic manufacturer as compatible with glass coating and substrates on which mirrors will be installed.

1. Available Manufacturers: Subject to compliance with requirements, manufacturers offering products that may be incorporated into the Work include, but are not limited to, the following:

   a. Gunther Mirror Mastics.
   b. Palmer Products Corporation.

2. VOC Content: Not more than 70 g/L when calculated according to 40 CFR 59, Subpart D (EPA Method 24).

C. Film Backing for Safety Mirrors: Film backing and pressure-sensitive adhesive; both compatible with mirror backing paint as certified by mirror manufacturer.

2.4 MIRROR HARDWARE

A. Top and Bottom Aluminum J-Channels: Aluminum extrusions with a return deep enough to produce a glazing channel to accommodate mirrors of thickness indicated and in lengths required to cover bottom and top edges of each mirror in a single piece.

1. Bottom Trim: J-channels formed with front leg and back leg not less than 3/8 and 7/8 inch (9.5 and 22 mm) in height, respectively, and a thickness of not less than 0.05 inch (1.3 mm).
2. Top Trim: J-channels formed with front leg and back leg not less than 5/8 and 1 inch (16 and 25 mm) in height, respectively, and a thickness of not less than 0.062 inch (1.57 mm).
3. Available Products: Subject to compliance with requirements, products that may be incorporated into the Work include, but are not limited to, the following:

   a. Bottom Trim:

      1) Laurence, C. R. Co., Inc.; CRL Standard "J" Channel.
      2) Sommer & Maca Industries, Inc.; Medium Gauge Aluminum Shallow Nose "J" Moulding Lower Bar.
      3) Sommer & Maca Industries, Inc.; Heavy Gauge Aluminum Shallow Nose "J" Moulding Lower Bar.

   b. Top Trim:

      1) Laurence, C. R. Co., Inc.; CRL Deep "J" Channel.
      2) Sommer & Maca Industries, Inc.; Medium Gauge Aluminum Deep Nose "J" Moulding Upper Bar.
      3) Sommer & Maca Industries, Inc.; Heavy Gauge Aluminum Deep Nose "J" Moulding Lower Bar.

B. Fasteners: Fabricated of same basic metal and alloy as fastened metal and matching it in finished color and texture where fasteners are exposed.

C. Anchors and Inserts: Provide devices as required for mirror hardware installation. Provide toothed or lead-shield expansion-bolt devices for drilled-in-place anchors. Provide galvanized anchors and inserts for applications on inside face of exterior walls and where indicated.

D. Safety Glazing Film: Optically clear, tear-resistant, penetration-resistant, and abrasion-resistant polyester film with pressure-sensitive adhesive; minimum 0.007 inch (7 mil) thickness.

2.5 FABRICATION

A. Mirror Sizes: To suit Project conditions cut mirrors to final sizes and shapes. Provide in the sizes indicated on Drawings

B. Cutouts: Fabricate cutouts for notches and holes in mirrors without marring visible surfaces. Locate and size cutouts so they fit closely around penetrations in mirrors.

PART 3 - EXECUTION

3.1 EXAMINATION

A. Examine substrates, over which mirrors are to be mounted, with Installer present, for compliance with installation tolerances, substrate preparation, and other conditions affecting performance.

1. Verify compatibility with and suitability of substrates, including compatibility of mirror mastic with existing finishes or primers.
2. Proceed with mirror installation only after unsatisfactory conditions have been corrected and surfaces are dry.

3.2 PREPARATION

A. Comply with mastic manufacturer's written installation instructions for preparation of substrates, including coating surfaces with mastic manufacturer's special bond coating where applicable.

3.3 INSTALLATION

A. General: Install mirrors to comply with mirror manufacturer's written instructions and with referenced GANA publications. Mount mirrors accurately in place in a manner that avoids distorting reflected images.

B. Provide a minimum air space of 1/8 inch (3 mm) between back of mirrors and mounting surface for air circulation between back of mirrors and face of mounting surface.

C. For wall-mounted mirrors, install mirrors with mastic and mirror hardware.

1. Attach mirror hardware securely to mounting surfaces with mechanical fasteners installed with anchors or inserts as applicable. Install fasteners so heads do not impose point loads on backs of mirrors.
2. For mirror hardware in the form of continuous J-channels at bottom, provide setting blocks 1/8 inch (3 mm) thick by 4 inches (100 mm) long at quarter points. To prevent trapping water, provide, between setting blocks, 2 slotted weeps not less than 1/4 inch (6.4 mm) wide by 3/8 inch (9.5 mm) long.
3. Install mirror hardware in the form of J-channels that are fabricated in single lengths to fit and cover top and bottom edges of mirrors.
4. Install mastic as follows:

a. Apply barrier coat to mirror backing where approved in writing by manufacturers of mirrors and backing material.

b. Apply mastic to comply with mastic manufacturer's written instructions for coverage and to allow air circulation between back of mirrors and face of mounting surface.
c. After mastic is applied, align mirrors and press into place while maintaining a minimum air space of 1/8 inch (3 mm) between back of mirrors and mounting surface.

3.4 CLEANING AND PROTECTION

A. Protect mirrors from breakage and contaminating substances resulting from construction operations.

B. Do not permit edges of mirrors to be exposed to standing water.

C. Maintain environmental conditions that will prevent mirrors from being exposed to moisture from condensation or other sources for continuous periods of time.

END OF SECTION 08 8300

SECTION 089119 - FIXED LOUVERS

PART 1 - GENERAL

1.1 RELATED DOCUMENTS

A. Drawings and general provisions of the Contract, including General and Supplementary Conditions and Division 01 Specification Sections, apply to this Section.

1.2 SUMMARY

A. Section Includes:

1. Fixed, extruded-aluminum louvers

B. Related Requirements:
1. Section 099113 "Exterior Painting" for field painting louvers.
2. See Division 5 Section "Structural Metal Framing" for structural framing supporting louver sections.

1.3 DEFINITIONS

A. Louver Terminology: Definitions of terms for metal louvers contained in AMCA 501 apply to this Section unless otherwise defined in this Section or in referenced standards.

B. Horizontal Louver: Louver with horizontal blades (i.e., the axes of the blades are horizontal).

C. Vertical Louver: Louver with vertical blades (i.e., the axes of the blades are vertical).

D. Drainable-Blade Louver: Louver with blades having gutters that collect water and drain it to channels in jambs and mullions, which carry it to bottom of unit and away from opening.

E. Wind-Driven-Rain-Resistant Louver: Louver that provides specified wind-driven rain performance, as determined by testing according to AMCA 500-L.

1.4 PERFORMANCE REQUIREMENTS

A. Design: Design louvers, including comprehensive engineering analysis by a qualified engineer, using structural performance requirements and design criteria indicated.

B. Structural Performance: Louvers shall withstand the effects of gravity loads and the following loads and stresses within limits and under conditions indicated without permanent deformation of louver components, noise or metal fatigue caused by louver blade rattle or flutter, or permanent damage to fasteners and anchors.

1. Wind Loads: Determine loads based on a uniform pressure of 30 lb./sq. ft. (1435 Pa), acting inward or outward.

1.5 ACTION SUBMITTALS

A. Product Data: For each type of product.

1. For louvers specified to bear AMCA seal, include printed catalog pages showing specified models with appropriate AMCA Certified Ratings Seals.

B. Shop Drawings: For louvers and accessories. Include plans, elevations, sections, details, and attachments to other work. Show frame profiles and blade profiles, angles, and spacing.

1. Show mullion profiles and locations.

C. Samples: For each type of metal finish required.

D. Delegated-Design Submittal: For louvers indicated to comply with structural performance requirements, including analysis data signed and sealed by the qualified professional engineer responsible for their preparation.

1.6 INFORMATIONAL SUBMITTALS

A. Windborne-debris-impact-resistance test reports.

1.7 FIELD CONDITIONS

A. Field Measurements: Verify actual dimensions of structural frame by field measurements before fabrication.

PART 2 - PRODUCTS

2.1 MANUFACTURERS

A. Source Limitations: Obtain louvers from single source from a single manufacturer where indicated to be of same type, design, or factory-applied color finish.

2.2 PERFORMANCE REQUIREMENTS

A. Delegated Design: Design louvers, including comprehensive engineering analysis by a qualified professional engineer, using structural performance requirements and design criteria indicated.

B. Structural Performance: Louvers shall withstand the effects of gravity loads and the following loads and stresses within limits and under conditions indicated without permanent deformation of louver components, noise or metal fatigue caused by louver-blade rattle or flutter, or permanent damage to fasteners and anchors. Wind pressures shall be considered to act normal to the face of the building.

1. Wind Loads: Determine loads based on pressures as indicated on Drawings.

2.3 FIXED, EXTRUDED-ALUMINUM LOUVERS

A. Horizontal, Nondrainable-Blade Louver:

1. Basis-of-Design Product: Subject to compliance with requirements, provide Architectural Louvers, V4JS, or comparable product by one of the following:

   a. Architectural Louvers; Harray, LLC.
   b. Greenheck Fan Corporation.
   c. or approved.

2. Louver Depth: 4 inches100 mm.
3. Blade Profile: 45 Degree Inverted J Blade. Plain blade without center baffle.
4. Blade Nominal Thickness: Not less than 0.080 inch (2.03 mm).
5. Framing Support Nominal Thickness: Not less than 0.125 inch (3.2 mm)
6. Louver Performance Requirements:
   a. Free Area: Not less than 8.0 sq. ft. (0.74 sq. m) for 48-inch- (1220-mm-) wide by 48-inch- (1220-mm-) high louver assembly.

b. Horizontal Drag Coefficient: Not greater than 0.63 on a cross sectional profile, allowing for a 37% reduction in wind load imposed horizontally upon supporting structural framing.

2.4 MATERIALS

A. Aluminum Extrusions: ASTM B 221ASTM B 221M, Alloy 6063-T5, T-52, or T6.

B. Aluminum Sheet: ASTM B 209M, Alloy 3003 with temper as required for forming.

C. Fasteners: Use types and sizes to suit unit installation conditions.

1. Use [Phillips flat-head] [hex-head or Phillips pan-head] [tamper-resistant] screws for exposed fasteners unless otherwise indicated.
2. For fastening aluminum, use aluminum or 300 series stainless-steel fasteners.
3. For color-finished louvers, use fasteners with heads that match color of louvers.

D. Bituminous Paint: Cold-applied asphalt emulsion complying with ASTM D 1187.

2.5 FABRICATION

A. Factory assemble louvers to minimize field splicing and assembly. Disassemble units as necessary for shipping and handling limitations. Clearly mark units for reassembly and coordinated installation.

B. Vertical Assemblies: Where height of louver units exceeds fabrication and handling limitations, fabricate units to permit field-bolted assembly with close-fitting joints in jambs and mullions, reinforced with splice plates.

1. Continuous Vertical Assemblies: Fabricate units without interrupting blade-spacing pattern where indicated.

C. Maintain equal louver blade spacing, including separation between blades and frames at head and sill, to produce uniform appearance.

D. Fabricate frames, including integral sills, to fit in openings of sizes indicated, with allowances made for fabrication and installation tolerances, adjoining material tolerances, and perimeter sealant joints.

E. Include supports, anchorages, and accessories required for complete assembly.

F. Provide vertical mullions of type and at spacings indicated, but not more than is recommended by manufacturer, or 72 inches 1830 mm o.c., whichever is less.

G. Join frame members to each other and to fixed louver blades with fillet welds concealed from view unless otherwise indicated or size of louver assembly makes bolted connections between frame members necessary.

2.6 FINISHES

A. High-Performance Organic Finish: 3-coat fluoropolymer finish complying with AAMA 2605 and containing not less than 70 percent PVDF resin by weight in color coat. Prepare, pre-treat, and apply coating to exposed metal surfaces to comply with coating and resin manufacturers' written instructions.

PART 3 - EXECUTION

3.1 EXAMINATION

A. Examine substrates and openings, with Installer present, for compliance with requirements for installation tolerances and other conditions affecting performance of the Work.

B. Proceed with installation only after unsatisfactory conditions have been corrected.

3.2 PREPARATION

A. Coordinate setting drawings, diagrams, templates, instructions, and directions for installation of anchorages. Coordinate delivery of such items to Project site.

3.3 INSTALLATION

A. Locate and place louvers level, plumb, and at indicated alignment with adjacent work.

B. Use concealed anchorages where possible. Provide brass or lead washers fitted to screws where required to protect metal surfaces and to make a weathertight connection.

C. Form closely fitted joints with exposed connections accurately located and secured.

D. Provide perimeter reveals and openings of uniform width for sealants and joint fillers, as indicated.

E. Protect unpainted galvanized and nonferrous-metal surfaces that are in contact with concrete, masonry, or dissimilar metals from corrosion and galvanic action by applying a heavy coating of bituminous paint or by separating surfaces with waterproof gaskets or nonmetallic flashing.

F. Install concealed gaskets, flashings, joint fillers, and insulation as louver installation progresses, where weathertight louver joints are required. Comply with Section 079200 "Joint Sealants" for sealants applied during louver installation.

3.4 ADJUSTING AND CLEANING

A. Clean exposed louver surfaces that are not protected by temporary covering, to remove fingerprints and soil during construction period. Do not let soil accumulate during construction period.

B. Before final inspection, clean exposed surfaces with water and a mild soap or detergent not harmful to finishes. Thoroughly rinse surfaces and dry.

C. Restore louvers damaged during installation and construction so no evidence remains of corrective work. If results of restoration are unsuccessful, as determined by Architect, remove damaged units and replace with new units.

1. Touch up minor abrasions in finishes with air-dried coating that matches color and gloss of, and is compatible with, factory-applied finish coating.

END OF SECTION 089119

SECTION 09 2216 - NON-STRUCTURAL METAL FRAMING

PART 1 - GENERAL

1.1 RELATED DOCUMENTS

A. Drawings and general provisions of the Contract, including General and Supplementary Conditions and Division 01 Specification Sections, apply to this Section.

1.2 SUMMARY

A. Section Includes:

1. Non-load-bearing steel framing systems for interior gypsum board assemblies.
2. Suspension systems for interior gypsum ceilings, soffits, and grid systems.

B. Related Requirements:

1. Division 05 Section "Cold-Formed Metal Framing" for exterior and interior load-bearing and exterior non-load-bearing wall studs; floor joists; roof rafters and ceiling joists; and roof trusses.

1.3 ACTION SUBMITTALS

A. Product Data: For each type of product.

Studs and Runners: Provide documentation that framing members' certification is according to SIFA's "Code Compliance Certification Program for Cold-Formed Steel Structural and Non-Structural Framing Members."

PART 2 - PRODUCTS

2.1 FRAMING SYSTEMS

A. Recycled Content of Steel Products: Postconsumer recycled content plus one-half of preconsumer recycled content not less than 25 percent.

B. Framing Members, General: Comply with ASTM C 754 for conditions indicated.

1. Steel Sheet Components: Comply with ASTM C 645 requirements for metal unless otherwise indicated.
2. Protective Coating: ASTM A 653/A 653M, G40 (Z120), hot-dip galvanized. G90 (Z275) hot dip galvanized at shower ceilings.

C. Studs and Runners: ASTM C 645. Use either steel studs and runners or dimpled steel studs and runners.

1. Steel Studs and Runners:

a. Minimum Base-Metal Thickness: 0.018 inch (0.45 mm).
b. Depth: As indicated on Drawings.

2. Dimpled Steel Studs and Runners:

a. Minimum Base-Metal Thickness: 0.015 inch (0.38 mm).
b. Depth: As indicated on Drawings.

D. Slip-Type Head Joints: Where indicated, provide one of the following:

1. Double-Runner System: ASTM C 645 top runners, inside runner with 2-inch- (51-mm-) deep flanges in thickness not less than indicated for studs and fastened to studs, and outer runner sized to friction fit inside runner.
2. Deflection Track: Steel sheet top runner manufactured to prevent cracking of finishes applied to interior partition framing resulting from deflection of structure above; in thickness not less than indicated for studs and in width to accommodate depth of studs.

a. Products: Subject to compliance with requirements, provide one of the following:

1) Dietrich Metal Framing; SLP-TRK Slotted Deflection Track.
2) Steel Network Inc. (The); VertiClip SLD Series.
3) Superior Metal Trim; Superior Flex Track System (SFT).

E. Flat Strap and Backing Plate: Steel sheet for blocking and bracing in length and width indicated.

1. Minimum Base-Metal Thickness: 0.018 inch (0.45 mm).

F. Hat-Shaped, Rigid Furring Channels: ASTM C 645.

1. Minimum Base-Metal Thickness: 0.018 inch (0.45 mm).
2. Depth: As indicated on Drawings.

G. Resilient Furring Channels: 1/2-inch- (13-mm-) deep, steel sheet members designed to reduce sound transmission.

1. Configuration: Hat shaped.

H. Cold-Rolled Furring Channels: 0.053-inch (1.34-mm) uncoated-steel thickness, with minimum 1/2-inch- (13-mm-) wide flanges.

1. Depth: As indicated on Drawings.
2. Furring Brackets: Adjustable, corrugated-edge type of steel sheet with minimum uncoated-steel thickness of 0.033 inch (0.8 mm).
3. Tie Wire: ASTM A 641/A 641M, Class 1 zinc coating, soft temper, 0.062-inch- (1.59-mm-) diameter wire, or double strand of 0.048-inch- (1.21-mm-) diameter wire.

I. Z-Shaped Furring: With slotted or nonslotted web, face flange of 1-1/4 inches (32 mm), wall attachment flange of 7/8 inch (22 mm), minimum uncoated-metal thickness of 0.018 inch (0.45 mm), and depth required to fit insulation thickness indicated.

2.2 SUSPENSION SYSTEMS

A. Tie Wire: ASTM A 641/A 641M, Class 1 zinc coating, soft temper, 0.062-inch- (1.59-mm-) diameter wire, or double strand of 0.048-inch- (1.21-mm-) diameter wire.

B. Hanger Attachments to Concrete:

1. Anchors: Fabricated from corrosion-resistant materials with holes or loops for attaching wire hangers and capable of sustaining, without failure, a load equal to 5 times that imposed by construction as determined by testing according to ASTM E 488 by an independent testing agency.

a. Type: Postinstalled, chemical anchor.

2. Powder-Actuated Fasteners: Suitable for application indicated, fabricated from corrosion-resistant materials with clips or other devices for attaching hangers of type indicated, and capable of sustaining, without failure, a load equal to 10 times that imposed by construction as determined by testing according to ASTM E 1190 by an independent testing agency.

C. Wire Hangers: ASTM A 641/A 641M, Class 1 zinc coating, soft temper, 0.16 inch (4.12 mm) in diameter.

D. Flat Hangers: Steel sheet, 1 by 3/16 inch (25 by 5 mm) by length indicated.

E. Furring Channels (Furring Members):

1. Cold-Rolled Channels: 0.053-inch (1.34-mm) uncoated-steel thickness, with minimum 1/2-inch- (13-mm-) wide flanges, 3/4 inch (19 mm) deep.
2. Steel Studs and Runners: ASTM C 645.

a. Minimum Base-Metal Thickness: 0.018 inch (0.45 mm)].
b. Depth: As indicated on Drawings.

3. Dimpled Steel Studs and Runners: ASTM C 645.

a. Minimum Base-Metal Thickness: 0.015 inch (0.38 mm).
b. Depth: As indicated on Drawings.

4. Hat-Shaped, Rigid Furring Channels: ASTM C 645, 7/8 inch (22 mm) deep.

a. Minimum Base-Metal Thickness: 0.018 inch (0.45 mm).

5. Resilient Furring Channels: 1/2-inch- (13-mm-) deep members designed to reduce sound transmission.

a. Configuration: Hat shaped.

F. Grid Suspension System for Gypsum Board Ceilings: ASTM C 645, direct-hung system composed of main beams and cross-furring members that interlock.

1. Protective Coating: ASTM A 653/A 653M, G40 (Z120), hot-dip galvanized. G90 (Z275) hot dip galvanized at shower ceilings.

2. Products: Subject to compliance with requirements, provide one of the following:

a. Armstrong World Industries, Inc.; Drywall Grid Systems.

b. Chicago Metallic Corporation; Drywall Grid System.
c. USG Corporation; Drywall Suspension System.

2.3 AUXILIARY MATERIALS

A. General: Provide auxiliary materials that comply with referenced installation standards.

1. Fasteners for Metal Framing: Of type, material, size, corrosion resistance, holding power, and other properties required to fasten steel members to substrates.

B. Isolation Strip at Exterior Walls: Provide one of the following:

1. Asphalt-Saturated Organic Felt: ASTM D 226, Type I (No. 15 asphalt felt), nonperforated.
2. Foam Gasket: Adhesive-backed, closed-cell vinyl foam strips that allow fastener penetration without foam displacement, 1/8 inch (3.2 mm) thick, in width to suit steel stud size.

PART 3 - EXECUTION

3.1 EXAMINATION

A. Examine areas and substrates, with Installer present, and including welded hollow-metal frames, cast-in anchors, and structural framing, for compliance with requirements and other conditions affecting performance of the Work.

B. Proceed with installation only after unsatisfactory conditions have been corrected.

3.2 PREPARATION

A. Suspended Assemblies: Coordinate installation of suspension systems with installation of overhead structure to ensure that inserts and other provisions for anchorages to building structure have been installed to receive hangers at spacing required to support the Work and that hangers will develop their full strength.

1. Furnish concrete inserts and other devices indicated to other trades for installation in advance of time needed for coordination and construction.

3.3 INSTALLATION, GENERAL

A. Installation Standard: ASTM C 754.

1. Portland Cement Plaster Assemblies: Also comply with requirements in ASTM C 1063 that apply to framing installation.
2. Gypsum Board Assemblies: Also comply with requirements in ASTM C 840 that apply to framing installation.

B. Install supplementary framing, and blocking to support fixtures, equipment services, heavy trim, grab bars, toilet accessories, furnishings, or similar construction.

C. Install bracing at terminations in assemblies.

D. Do not bridge building control and expansion joints with non-load-bearing steel framing members. Frame both sides of joints independently.

3.4 INSTALLING FRAMED ASSEMBLIES

A. Install framing system components according to spacings indicated, but not greater than spacings required by referenced installation standards for assembly types.

1. Single-Layer Application: 16 inches (406 mm) o.c. unless otherwise indicated.
2. Multilayer Application: 16 inches (406 mm) o.c. unless otherwise indicated.
3. Tile Backing Panels: 16 inches (406 mm) o.c. unless otherwise indicated.

B. Where studs are installed directly against exterior masonry walls or dissimilar metals at exterior walls, install isolation strip between studs and exterior wall.

C. Install studs so flanges within framing system point in same direction.

D. Install tracks (runners) at floors and overhead supports. Extend framing full height to structural supports or substrates above suspended ceilings except where partitions are indicated to terminate at suspended ceilings. Continue framing around ducts penetrating partitions above ceiling.

1. Slip-Type Head Joints: Where framing extends to overhead structural supports, install to produce joints at tops of framing systems that prevent axial loading of finished assemblies.
2. Door Openings: Screw vertical studs at jambs to jamb anchor clips on door frames; install runner track section (for cripple studs) at head and secure to jamb studs.

    a. Install two studs at each jamb unless otherwise indicated.
    b. Install cripple studs at head adjacent to each jamb stud, with a minimum 1/2-inch (13-mm) clearance from jamb stud to allow for installation of control joint in finished assembly.
    c. Extend jamb studs through suspended ceilings and attach to underside of overhead structure.

3. Other Framed Openings: Frame openings other than door openings the same as required for door openings unless otherwise indicated. Install framing below sills of openings to match framing required above door heads.

E. Z-Furring Members:

1. Erect insulation, specified in Division 07 Section "Thermal Insulation," vertically and hold in place with Z-furring members spaced 24 inches (610 mm) o.c.
2. Except at exterior corners, securely attach narrow flanges of furring members to wall with concrete stub nails, screws designed for masonry attachment, or powder-driven fasteners spaced 24 inches (610 mm) o.c.
3. At exterior corners, attach wide flange of furring members to wall with short flange extending beyond corner; on adjacent wall surface, screw-attach short flange of furring channel to web of attached channel. At interior corners, space second member no more than 12 inches (305 mm) from corner and cut insulation to fit.

F. Installation Tolerance: Install each framing member so fastening surfaces vary not more than 1/8 inch (3 mm) from the plane formed by faces of adjacent framing.

3.5 INSTALLING SUSPENSION SYSTEMS

A. Install suspension system components according to spacings indicated, but not greater than spacings required by referenced installation standards for assembly types.

B. Isolate suspension systems from building structure where they abut or are penetrated by building structure to prevent transfer of loading imposed by structural movement.

C. Suspend hangers from building structure as follows:

1. Install hangers plumb and free from contact with insulation or other objects within ceiling plenum that are not part of supporting structural or suspension system.

    a. Splay hangers only where required to miss obstructions and offset resulting horizontal forces by bracing, countersplaying, or other equally effective means.

2. Where width of ducts and other construction within ceiling plenum produces hanger spacings that interfere with locations of hangers required to support standard suspension system members, install supplemental suspension members and hangers in the form of trapezes or equivalent devices.

    a. Size supplemental suspension members and hangers to support ceiling loads within performance limits established by referenced installation standards.

3. Wire Hangers: Secure by looping and wire tying, either directly to structures or to inserts, eye screws, or other devices and fasteners that are secure and appropriate for substrate, and in a manner that will not cause hangers to deteriorate or otherwise fail.
4. Flat Hangers: Secure to structure, including intermediate framing members, by attaching to inserts, eye screws, or other devices and fasteners that are secure and appropriate for structure and hanger, and in a manner that will not cause hangers to deteriorate or otherwise fail.
5. Do not attach hangers to steel roof deck.
6. Do not attach hangers to rolled-in hanger tabs of composite steel floor deck.
7. Do not connect or suspend steel framing from ducts, pipes, or conduit.

D. Seismic Bracing: Sway-brace suspension systems with hangers used for support.

E. Grid Suspension Systems: Attach perimeter wall track or angle where grid suspension systems meet vertical surfaces. Mechanically join main beam and cross-furring members to each other and butt-cut to fit into wall track.

F. Installation Tolerances: Install suspension systems that are level to within 1/8 inch in 12 feet (3 mm in 3.6 mm) measured lengthwise on each member that will receive finishes and transversely between parallel members that will receive finishes.

END OF SECTION 09 2216

SECTION 09 3000 – TILING & SHOWER ACCESSORIES

PART 1 - GENERAL

1.1 RELATED DOCUMENTS

A. Drawings and general provisions of the Contract, including General and Supplementary Conditions and Division 01 Specification Sections, apply to this Section.

1.2 SUMMARY

A. Section Includes:

1. Porcelain tile.
2. Metal edge strips
3. Shower pan
4. Splash guard
5. Recessed shower Shelves

B. Related Sections:

1. Division 07 Section "Joint Sealants" for sealing of expansion, contraction, control, and isolation joints in tile surfaces.

1.3 DEFINITIONS

A. General: Definitions in the ANSI A108 series of tile installation standards and in ANSI A137.1 apply to Work of this Section unless otherwise specified.

B. ANSI A108 Series: ANSI A108.01, ANSI A108.02, ANSI A108.5, ANSI A108.10, and ANSI A108.17, which are contained in "American National Standard Specifications for Installation of Ceramic Tile."

C. Module Size: Actual tile size plus joint width indicated.

D. Face Size: Actual tile size, excluding spacer lugs.

1.4 ACTION SUBMITTALS

A. Product Data: For each type of product indicated.

B. Shop Drawings: Show locations of each type of tile and tile pattern. Show widths, details, and locations of expansion, contraction, control, and isolation joints in tile substrates and finished tile surfaces.

C. Samples for Verification:

1. Full-size units of each type and composition of tile and for each color and finish required.

2. Metal edge strips in 6-inch (150-mm) lengths.

1.5 INFORMATIONAL SUBMITTALS

A. Qualification Data: For qualified Installer.

B. Master Grade Certificates: For each shipment, type, and composition of tile, signed by tile manufacturer and Installer.

C. Product Certificates: For each type of product, signed by product manufacturer.

D. Material Test Reports: For each tile-setting and -grouting product.

1.6 MAINTENANCE MATERIAL SUBMITTALS

A. Furnish extra materials that match and are from same production runs as products installed and that are packaged with protective covering for storage and identified with labels describing contents.

1. Tile and Trim Units: Furnish quantity of full-size units equal to 3 percent of amount installed for each type, composition, color, pattern, and size indicated.

2. Grout: Furnish quantity of grout equal to 3 percent of amount installed for each type, composition, and color indicated.

1.7 QUALITY ASSURANCE

A. Source Limitations for Tile: Obtain tile of each type and color or finish from one source or producer.

1. Obtain tile of each type and color or finish from same production run and of consistent quality in appearance and physical properties for each contiguous area.

B. Source Limitations for Setting and Grouting Materials: Obtain ingredients of a uniform quality for each mortar, adhesive, and grout component from one manufacturer and each aggregate from one source or producer.

C. Source Limitations for Other Products: Obtain each of the following products specified in this Section from a single manufacturer for each product:
1. Joint sealants.
2. Metal edge strips.

D. Preinstallation Conference: Conduct conference at location determined by owner and Architect.

1. Review requirements in ANSI A108.01 for substrates and for preparation by other trades.

1.8 DELIVERY, STORAGE, AND HANDLING

A. Deliver and store packaged materials in original containers with seals unbroken and labels intact until time of use. Comply with requirements in ANSI A137.1 for labeling tile packages.

B. Store tile and cementitious materials on elevated platforms, under cover, and in a dry location.

C. Handle tile that has temporary protective coating on exposed surfaces to prevent coated surfaces from contacting backs or edges of other units. If coating does contact bonding surfaces of tile, remove coating from bonding surfaces before setting tile.

1.9 PROJECT CONDITIONS

A. Environmental Limitations: Do not install tile until construction in spaces is complete and ambient temperature and humidity conditions are maintained at the levels indicated in referenced standards and manufacturer's written instructions.

1.10 EXTRA MATERIALS

A. Furnish extra materials that match and are from same production runs as products installed and that are packaged with protective covering for storage and identified with labels describing contents.

1. Tile: Furnish quantity of full-size units equal to 3 percent of amount installed for each type, composition, color, pattern, and size indicated.
2. Grout: Furnish quantity of grout equal to 3 percent of amount installed for each type, composition, and color indicated.

PART 2 - PRODUCTS

2.1 PRODUCTS, GENERAL

A. ANSI Ceramic Tile Standard: Provide tile that complies with ANSI A137.1 for types, compositions, and other characteristics indicated.

1. Provide tile complying with Standard grade requirements unless otherwise indicated.

B. ANSI Standards for Tile Installation Materials: Provide materials complying with ANSI A108.02, ANSI standards referenced in other Part 2 articles, ANSI standards referenced by TCA installation methods specified in tile installation schedules, and other requirements specified.

C. Factory Blending: For tile exhibiting color variations within ranges, blend tile in factory and package so tile units taken from one package show same range in colors as those taken from other packages and match approved Samples.

D. Mounting: For factory-mounted tile, provide back- or edge-mounted tile assemblies as standard with manufacturer unless otherwise indicated.

1. Where tile is indicated for installation in wet areas, do not use back- or edge-mounted tile assemblies unless tile manufacturer specifies in writing that this type of mounting is suitable for installation indicated and has a record of successful in-service performance.

E. Factory-Applied Temporary Protective Coating: Where indicated under tile type, protect exposed surfaces of tile against adherence of mortar and grout by precoating with continuous film of petroleum paraffin wax, applied hot. Do not coat unexposed tile surfaces.

2.2 TILE PRODUCTS

A. Glazed porcelain tile.

1. Manufacturers: Subject to compliance with requirements, provide, or comparable American made product if approved by Architect prior to bidding.

a. American Olean. (Basis of Design).
b. Daltile.
c. Ceasar.

2. Product: American Olean- Rapport

a. Composition: Glazed porcelain – through-body.
b. Module Size: Floor Tile 12 by 24 inches & 2x4 Mosaic (Shower Floor Only)
c. Trim: Provide 3x12 Bullnose , 6 x 12 Cove Base throughout, & Cove Outercorner
d. Thickness: 3/8 inch (Floor)
a) Floor Tile 3/8”
b) Mosaic ¼”
e. Tile Color: As selected by Architect from manufacturer's full range.
f. Grout Color: As selected by Architect from manufacturer's full range.
g. Grout Size: 3/32”

2.3 TILE/SHOWER COMPONENTS

A. Recessed Shower Shelves.

1. Product: SHOWER SHELF
a. Ready Niche - Double Niche Double Recessed Shelf (Basis of Design).
b. Composition: Glazed porcelain – through-body.
c. Size:16”x20”x4”

2. Product: SHOWER PAN
a. American Olean- Tile Redi Base Barrier Free/Center Drain
b. Size: 38”x38”x1”
c. Ref. Drawings for details.

3. Product: FLASHING
a. Redi Flash -Waterproofing System:
b. Material: Pre-formed aluminum guard
c. Height: 3”
d. Width: Reference drawings for appropriate size and details.

4. Product: SPLASHGAURD
   a. Schluter Shower Dam –Showerprofile-WSL Straight lip

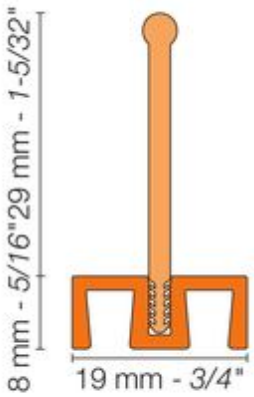

SHOWERPROFILE-WS + -WSL

2.4 SETTING MATERIALS

A. Latex-Portland Cement Mortar (Thin Set): ANSI A118.4.

1. Manufacturers: Subject to compliance with requirements, provide product by one of the following:

   a. Bonsal American; an Oldcastle company.
   b. C-Cure.
   c. Custom Building Products.
   d. Laticrete International, Inc.
   e. MAPEI Corporation.
   f. TEC; a subsidiary of H. B. Fuller Company.

2. Provide prepackaged, dry-mortar mix containing dry, redispersible, vinyl acetate or acrylic additive to which only water must be added at Project site.
3. For wall applications, provide mortar that complies with requirements for nonsagging mortar in addition to the other requirements in ANSI A118.4.

2.5 GROUT MATERIALS

A. Modified Tile Grout: ANSI A118.3.

1. Manufacturers: Subject to compliance with requirements, provide product from one of the following manufacturers:

a. Bostik.; TruColor, pre-mixed grout (Basis of Design).
b. Laticrete International, Inc., Quartzlock
c. MAPEI Corporation.
d. TEC; a subsidiary of H. B. Fuller Company.

2. Type: Water-based, urethane grout.

3. Product shall contain integral grout sealer.

2.6 MISCELLANEOUS MATERIALS

A. Trowelable Underlayments and Patching Compounds: Latex-modified, portland cement-based formulation provided or approved by manufacturer of tile-setting materials for installations indicated.

B. Temporary Protective Coating: Product indicated below that is formulated to protect exposed surfaces of tile against adherence of mortar and grout; compatible with tile, mortar, and grout products; and easily removable after grouting is completed without damaging grout or tile.

1. Grout release in form of manufacturer's standard proprietary liquid coating that is specially formulated and recommended for use as temporary protective coating for tile.

C. Tile Cleaner: A neutral cleaner capable of removing soil and residue without harming tile and grout surfaces, specifically approved for materials and installations indicated by tile and grout manufacturers.

2.7 MIXING MORTARS AND GROUT

A. Mix mortars and grouts to comply with referenced standards and mortar and grout manufacturers' written instructions.

B. Add materials, water, and additives in accurate proportions.

C. Obtain and use type of mixing equipment, mixer speeds, mixing containers, mixing time, and other procedures to produce mortars and grouts of uniform quality with optimum performance characteristics for installations indicated.

PART 3 - EXECUTION

3.1 EXAMINATION

A. Examine substrates, areas, and conditions where tile will be installed, with Installer present, for compliance with requirements for installation tolerances and other conditions affecting performance of installed tile.
1. Verify that substrates for setting tile are firm, dry, clean, free of coatings that are incompatible with tile-setting materials including curing compounds and other substances that contain soap, wax, oil, or silicone; and comply with flatness tolerances required by ANSI A108.01 for installations indicated.
2. Verify that installation of grounds, anchors, recessed frames, electrical and mechanical units of work, and similar items located in or behind tile has been completed.

3. Verify that joints and cracks in tile substrates are coordinated with tile joint locations; if not coordinated, adjust joint locations in consultation with Architect.

B. Proceed with installation only after unsatisfactory conditions have been corrected.

3.2 PREPARATION

A. Fill cracks, holes, and depressions in concrete substrates for tile floors installed with thin-set mortar with trowelable leveling and patching compound specifically recommended by tile-setting material manufacturer.

B. Blending: For tile exhibiting color variations, verify that tile has been factory blended and packaged so tile units taken from one package show same range of colors as those taken from other packages and match approved Samples. If not factory blended, either return to manufacturer or blend tiles at Project site before installing.

C. Field-Applied Temporary Protective Coating: If indicated under tile type or needed to prevent grout from staining or adhering to exposed tile surfaces, precoat them with continuous film of temporary protective coating, taking care not to coat unexposed tile surfaces.

3.3 TILE INSTALLATION

A. Comply with TCA's "Handbook for Ceramic Tile Installation" for TCA installation methods specified in tile installation schedules. Comply with parts of the ANSI A108 Series "Specifications for Installation of Ceramic Tile" that are referenced in TCA installation methods, specified in tile installation schedules, and apply to types of setting and grouting materials used.

B. Extend tile work into recesses and under or behind equipment and fixtures to form complete covering without interruptions unless otherwise indicated. Terminate work neatly at obstructions, edges, and corners without disrupting pattern or joint alignments.

C. Accurately form intersections and returns. Perform cutting and drilling of tile without marring visible surfaces. Carefully grind cut edges of tile abutting trim, finish, or built-in items for straight aligned joints. Fit tile closely to electrical outlets, piping, fixtures, and other penetrations so plates, collars, or covers overlap tile.

D. Jointing Pattern: Lay tile in grid pattern unless otherwise indicated. Lay out tile work and center tile fields in both directions in each space or on each wall area. Lay out tile work to minimize the use of pieces that are less than half of a tile. Provide uniform joint widths unless otherwise indicated.
   1. Where adjoining tiles on floor, base, walls, or trim are specified or indicated to be same size, align joints.
   2. Where tiles are specified or indicated to be whole integer multiples of adjoining tiles on floor, base, walls, or trim, align joints unless otherwise indicated.

E. Joint Widths: Unless otherwise indicated, install tile with the following joint widths:

   1. Ceramic Wall Tile: 3/32 inch

F. Lay out tile wainscots to dimensions indicated or to next full tile beyond dimensions indicated.

G. Expansion Joints: Provide expansion joints and other sealant-filled joints, including control, contraction, and isolation joints, where indicated. Form joints during installation of setting materials, mortar beds, and tile. Do not saw-cut joints after installing tiles.
   1. Prepare joints and apply sealants to comply with requirements in Division 07 Section "Joint Sealants."

3.4 CLEANING AND PROTECTING

A. Cleaning: On completion of placement and grouting, clean all ceramic tile surfaces so they are free of foreign matter.

   1. Remove grout residue from tile as soon as possible.
   2. Clean grout smears and haze from tile according to tile and grout manufacturer's written instructions but no sooner than 10 days after installation. Use only cleaners recommended by tile and grout manufacturers and only after determining that cleaners are safe to use by testing on samples of tile and other surfaces to be cleaned. Protect metal surfaces and plumbing fixtures from effects of cleaning. Flush surfaces with clean water before and after cleaning.
   3. Remove temporary protective coating by method recommended by coating manufacturer and that is acceptable to tile and grout manufacturer. Trap and remove coating to prevent drain clogging.

B. Protect installed tile work with kraft paper or other heavy covering during construction period to prevent staining, damage, and wear. If recommended by tile manufacturer, apply coat of neutral protective cleaner to completed tile walls and floors.

C. Prohibit foot and wheel traffic from tiled floors for at least seven days after grouting is completed.

D. Before final inspection, remove protective coverings and rinse neutral protective cleaner from tile surfaces.

3.5 INTERIOR TILE INSTALLATION SCHEDULE

A. Interior Wall Installations, Masonry or Concrete:

   1. Tile Installation W202: Thin-set mortar, TCA W202.

      a. Tile Type: Glazed Porcelain tile.

      b. Floor Mosaic- Cut and slope as indicated in drawings.

      c. Tile Recessed Shower Shelves.
      d. Thin-Set Mortar: Latex- portland cement mortar.
      e. Grout: Water-based pre-mixed grout.

END OF SECTION 09 3000

SECTION 09 5113 - ACOUSTICAL PANEL CEILINGS

PART 1 - GENERAL

1.1 RELATED DOCUMENTS

A. Drawings and general provisions of the Contract, including General and Supplementary Conditions and Division 01 Specification Sections, apply to this Section.

1.2 SUMMARY

A. Section includes acoustical panels and exposed suspension systems for ceilings.

1.3 PREINSTALLATION MEETINGS

A. Pre-Installation Conference for Acoustical Panel Ceilings: Prior to start of work in areas scheduled for ceiling installation, conduct conference at Project to comply with requirements of applicable Division 01 Sections.

1. Required Attendees:
   a. Architect.
   b. Contractor, including supervisor.
   c. Ceiling installer, including supervisor.

2. Minimum Agenda: Installer shall demonstrate understanding of work required by reviewing and discussing procedures for, but not limited to, the following:

   a. Tour representative areas of required work, discuss and evaluate for compliance with Contract Documents, including substrate conditions, surface preparations, sequence of procedures, and other preparatory work performed by other installers.
   b. Review Contract Document requirements.
   c. Review approved submittals.
   d. Review procedures, including, but not limited to:

      1) Environmental requirements.
      2) Scheduling and phasing of work.
      3) Coordinating with other work and personnel.
      4) Protection of adjacent surfaces.
      5) Surface preparation.
      6) Repair of defects and defective work prior to installation.
      7) Suspension system requirements.
      8) Seismic restraint requirement compliance.

1.4 ACTION SUBMITTALS

A. Product Data: For each type of product.

B. Samples for Verification: For each component indicated and for each exposed finish required, prepared on Samples of size indicated below.

1. Acoustical Panel: Set of 6-inch- (150-mm-) square Samples of each type, color, pattern, and texture.
2. Exposed Suspension-System Members, Moldings, and Trim: Set of 6-inch- (150-mm-) long Samples of each type, finish, and color.

1.5 INFORMATIONAL SUBMITTALS

A. Coordination Drawings: Reflected ceiling plans, drawn to scale, on which the following items are shown and coordinated with each other, using input from installers of the items involved:

1. Suspended ceiling components.
2. Size and location of initial access modules for acoustical panels.
3. Items penetrating finished ceiling including the following:

a. Lighting fixtures.
b. Air outlets and inlets.
c. Speakers.
d. Sprinklers.
e. Access panels.
f. AV equipment.

4. Perimeter moldings.

B. Qualification Data: For testing agency.

C. Product Test Reports: For each acoustical panel ceiling, for tests performed by manufacturer and witnessed by a qualified testing agency.

D. Evaluation Reports: For each acoustical panel ceiling suspension system, from ICC-ES.

1.6 CLOSEOUT SUBMITTALS

A. Maintenance Data: For finishes to include in maintenance manuals.

1.7 MAINTENANCE MATERIAL SUBMITTALS

A. Furnish extra materials that match products installed and that are packaged with protective covering for storage and identified with labels describing contents.

1. Acoustical Ceiling Panels: Full-size panels equal to 2 percent of quantity installed.
2. Suspension-System Components: Quantity of each exposed component equal to 2 percent of quantity installed.

1.8 QUALITY ASSURANCE

A. Testing Agency Qualifications: Qualified according to NVLAP for testing indicated.

1.9 DELIVERY, STORAGE, AND HANDLING

A. Deliver acoustical panels, suspension-system components, and accessories to Project site in original, unopened packages and store them in a fully enclosed, conditioned space where they will be protected against damage from moisture, humidity, temperature extremes, direct sunlight, surface contamination, and other causes.

B. Before installing acoustical panels, permit them to reach room temperature and a stabilized moisture content.

C. Handle acoustical panels carefully to avoid chipping edges or damaging units in any way.

1.10 FIELD CONDITIONS

A. Environmental Limitations: Do not install acoustical panel ceilings until spaces are enclosed and weatherproof, wet work in spaces is complete and dry, work above ceilings is complete, and ambient temperature and humidity conditions are maintained at the levels indicated for Project when occupied for its intended use.

PART 2 - PRODUCTS

2.1 PERFORMANCE REQUIREMENTS

A. Seismic Performance: Acoustical ceiling and clouds shall withstand the effects of earthquake motions determined according to ASCE/SEI 7.

1. Seismic Design Criteria for building and components: Refer to Structural Drawing Sheet S1.00 for Seismic Design Criteria.

B. Surface-Burning Characteristics: Comply with ASTM E 84; testing by a qualified testing agency. Identify products with appropriate markings of applicable testing agency.

1. Flame-Spread Index: Comply with ASTM E 1264 for Class A materials.
2. Smoke-Developed Index: 50 or less.

2.2 ACOUSTICAL PANELS, GENERAL

A. Source Limitations:

1. Acoustical Ceiling Panel: Obtain each type from single source from single manufacturer.
2. Suspension System: Obtain each type from single source from single manufacturer.

B. Source Limitations: Obtain each type of acoustical ceiling panel and supporting suspension system from single source from single manufacturer.

C. Recycled Content: Postconsumer recycled content plus one-half of preconsumer recycled content not less than 40 percent.

D. Substrate: Water-felted mineral fiber.

E. Acoustical Panel Standard: Provide manufacturer's standard panels of configuration indicated that comply with ASTM E 1264 classifications as designated by types, patterns, acoustical ratings, and light reflectances unless otherwise indicated.

1. Mounting Method for Measuring NRC: Type E-400; plenum mounting in which face of test specimen is 15-3/4 inches (400 mm) away from test surface according to ASTM E 795.

2.3 ACOUSTICAL PANELS “Type 1”

A. Manufacturer: Subject to compliance with requirements, provide product by one of the following:

1. USG, (Basis of Design)
2. Chicago Metallic Corporation.
3. Armstrong

B. Product: Armstrong, Fissured

C. Classification: Provide panels complying with ASTM E 1264 for type, form, and pattern as follows:

1. Type and Form: Type III, mineral base with painted finish; Form 1, nodular.
2. Pattern: CE (perforated, small holes and lightly textured).

D. Color: White.

E. LR: Not less than 0.81.

F. NRC: Not less than 0.55.

G. CAC: Not less than 33.

H. Edge/Joint Detail: Angled Tegular.

I. Thickness: 5/8 inch.

J. Modular Size: 24 by 24 inches (610 by 610 mm).

K. Grid: DX/DXL 15/16” XL, Color white.

2.4 METAL SUSPENSION SYSTEMS, GENERAL

A. Recycled Content: Postconsumer recycled content plus one-half of preconsumer recycled content not less than 25 percent.

B. Metal Suspension-System Standard: Provide manufacturer's standard direct-hung metal suspension systems of types, structural classifications, and finishes indicated that comply with applicable requirements in ASTM C 635/C 635M.

1. High-Humidity Finish: Comply with ASTM C 635/C 635M requirements for "Coating Classification for Severe Environment Performance" where high-humidity finishes are indicated.

C. Wire Hangers, Braces, and Ties: Provide wires complying with the following requirements:

1. Zinc-Coated, Carbon-Steel Wire: ASTM A 641/A 641M, Class 1 zinc coating, soft temper.
2. Stainless-Steel Wire: ASTM A 580/A 580M, Type 304, nonmagnetic.
3. Nickel-Copper-Alloy Wire: ASTM B 164, nickel-copper-alloy UNS No. N04400.
4. Size: Select wire diameter so its stress at three times hanger design load (ASTM C 635/C 635M, Table 1, "Direct Hung") will be less than yield stress of wire, but provide not less than 0.135-inch- (3.5-mm-) diameter wire.

D. Hanger Rods: Mild steel, zinc coated or protected with rust-inhibitive paint.

E. Angle Hangers: Angles with legs not less than 7/8 inch (22 mm) wide; formed with 0.04-inch- (1-mm-) thick, galvanized-steel sheet complying with ASTM A 653/A 653M, G90 (Z275) coating designation; with bolted connections and 5/16-inch- (8-mm-) diameter bolts.

F. Seismic Stabilizer Bars: Manufacturer's standard perimeter stabilizers designed to accommodate seismic forces.

G. Seismic Struts: Manufacturer's standard compression struts designed to accommodate seismic forces.

H. Seismic Clips: Manufacturer's standard seismic clips designed and spaced to secure acoustical panels in place.

2.5 METAL SUSPENSION SYSTEM

A. Manufacturer: Subject to compliance with requirements, provide product by one of the following:

1. USG, (Basis of Design).
2. Chicago Metallic Corporation.
3. Armstrong.

B. Product: USG 15/16” DX/DXL

C. Wide-Face, Capped, Double-Web,Hot-Dip Galvanized, G60 (Z180), Steel Suspension System: Main and cross runners roll formed from cold-rolled steel sheet; hot-dip galvanized according to ASTM A 653/A 653M, G60 (Z180) coating designation; with prefinished, cold-rolled, 15/16-inch- (24-mm-) wide aluminum caps on flanges.

1. Structural Classification: Heavy-duty system.
2. Seismic RX Suspension System.
3. Face Design: Flat, flush.
4. Face Finish: Painted white.

PART 3 - EXECUTION

3.1 EXAMINATION

A. Examine substrates, areas, and conditions, including structural framing to which acoustical panel ceilings attach or abut, with Installer present, for compliance with requirements specified in this and other Sections that affect ceiling installation and anchorage and with requirements for installation tolerances and other conditions affecting performance of acoustical panel ceilings.

B. Examine acoustical panels before installation. Reject acoustical panels that are wet, moisture damaged, or mold damaged.

C. Proceed with installation only after unsatisfactory conditions have been corrected.

3.2 PREPARATION

A. Measure each ceiling area and establish layout of acoustical panels to balance border widths at opposite edges of each ceiling. Avoid using less-than-half-width panels at borders, and comply with layout shown on reflected ceiling plans.

3.3 INSTALLATION

A. General: Install acoustical panel ceilings to comply with ASTM C 636/C 636M and seismic design requirements indicated, according to manufacturer's written instructions and CISCA's "Ceiling Systems Handbook." and “Guidelines for Seismic Restraint for Direct Hung Suspended Ceiling Assemblies, Seismic Zones 3 and 4”.

B. Suspend ceiling hangers from building's structural members and as follows:

1. Install hangers plumb and free from contact with insulation or other objects within ceiling plenum that are not part of supporting structure or of ceiling suspension system.
2. Splay hangers only where required to miss obstructions; offset resulting horizontal forces by bracing, countersplaying, or other equally effective means.
3. Where width of ducts and other construction within ceiling plenum produces hanger spacings that interfere with location of hangers at spacings required to support standard suspension-system members, install supplemental suspension members and hangers in form of trapezes or equivalent devices.
4. Secure wire hangers to ceiling-suspension members and to supports above with a minimum of three tight turns. Connect hangers directly either to structures or to inserts, eye screws, or other devices that are secure and appropriate for substrate and that will not deteriorate or otherwise fail due to age, corrosion, or elevated temperatures.
5. Secure flat, angle, channel, and rod hangers to structure, including intermediate framing members, by attaching to inserts, eye screws, or other devices that are secure and appropriate for both the structure to which hangers are attached and the type of hanger involved. Install hangers in a manner that will not cause them to deteriorate or fail due to age, corrosion, or elevated temperatures.
6. When steel framing does not permit installation of hanger wires at spacing required, install carrying channels or other supplemental support for attachment of hanger wires.
7. Do not attach hangers to steel deck tabs.
8. Do not attach hangers to steel roof deck. Attach hangers to structural members.
9. Space hangers not more than 48 inches (1200 mm) o.c. along each member supported directly from hangers unless otherwise indicated; provide hangers not more than 8 inches (200 mm) from ends of each member.

10. Size supplemental suspension members and hangers to support ceiling loads within performance limits established by referenced standards and publications.
11. Use manufacturer installation guidelines for panels designated to be installed on a slope.

C. Install suspension-system runners so they are square and securely interlocked with one another. Remove and replace dented, bent, or kinked members.

D. Install acoustical panels with undamaged edges and fit accurately into suspension-system runners and edge moldings. Scribe and cut panels at borders and penetrations to provide a neat, precise fit.

1. Arrange directionally patterned acoustical panels as follows:

a. As indicated on reflected ceiling plans.
2. For reveal-edged panels on suspension-system runners, install panels with bottom of reveal in firm contact with top surface of runner flanges.
3. Paint cut edges of panel remaining exposed after installation; match color of exposed panel surfaces using coating recommended in writing for this purpose by acoustical panel manufacturer.

3.4 CLEANING

A. Clean exposed surfaces of acoustical panel ceilings, including trim, edge moldings, and suspension-system members. Comply with manufacturer's written instructions for cleaning and touchup of minor finish damage. Remove and replace ceiling components that cannot be successfully cleaned and repaired to permanently eliminate evidence of damage.

END OF SECTION 09 5113

SECTION 096513 - RESILIENT BASE AND ACCESSORIES

PART 1 - GENERAL

1.1 RELATED DOCUMENTS

A. Drawings and general provisions of the Contract, including General and Supplementary Conditions and Division 01Specification Sections, apply to this Section.

1.2 SUMMARY

A. Section Includes:

1. Resilient base.
2. Resilient molding accessories.
3. Resilient Tile Flooring.
4. Resilient Stair treads, risers and nosings.

1.3 SUBMITTALS

A. Product Data: For each type of product indicated.

B. Samples for Initial Selection: For each type of product indicated.

C. Samples for Verification: For each type of product indicated, in manufacturer's standard-size Samples but not less than 12 inches long, of each resilient product color, texture, and pattern required.

D. Product Schedule: For resilient products. Use same designations indicated on Drawings.

1.4 DELIVERY, STORAGE, AND HANDLING

A. Store resilient products and installation materials in dry spaces protected from the weather, with ambient temperatures maintained within range recommended by manufacturer, but not less than 50 deg F or more than 90 deg F.

1.5 PROJECT CONDITIONS

A. Maintain ambient temperatures within range recommended by manufacturer, but not less than 70 deg F or more than 95 deg F, in spaces to receive resilient products during the following time periods:

1. 48 hours before installation.
2. During installation.
3. 48 hours after installation.

B. Until Substantial Completion, maintain ambient temperatures within range recommended by manufacturer, but not less than 55 deg F or more than 95 deg F.

C. Install resilient products after other finishing operations, including painting, have been completed.

1.6 EXTRA MATERIALS

A. Furnish extra materials that match products installed and that are packaged with protective covering for storage and identified with labels describing contents.

1. Furnish not less than 10 linear feet for every 500 linear feet or fraction thereof, of each type, color, pattern, and size of resilient product installed.

PART 2 - PRODUCTS

2.1 RESILIENT BASE

A. Resilient Base:

1. Manufacturers: Subject to compliance with requirements, provide products by the following:
   a. Roppe Corporation, USA.
   b. Johnsonite

B. Resilient Base Standard: ASTM F 1861.

1. Material Requirement: Type TS (rubber, vulcanized thermoset).
2. Manufacturing Method: Group I (solid, homogeneous).
3. Style: Cove (base with toe).

C. Minimum Thickness: 0.125 inch.

D. Height: 4 inches.

E. Lengths: Coils in manufacturer's standard length.

F. Outside Corners: Job formed or preformed.

G. Inside Corners: Job formed or preformed.

H. Finish: As selected by Architect from manufacturer's full range.

I. Colors and Patterns: As selected by Architect from full range of industry colors.

2.2 RESILIENT MOLDING ACCESSORY

A. Resilient Molding Accessory:

1. Manufacturers: Subject to compliance with requirements, provide products by the following:
   a. Roppe Corporation, USA.
   b. Johnsonite

B. Description: Carpet edge for glue-down applications, Nosing for carpet, Nosing for resilient floor covering, Reducer strip for resilient floor covering, Joiner for tile and carpet, Transition strips.

C. Material: Rubber.

D. Profile and Dimensions: As indicated or required for indicated floor finishes.

E. Colors and Patterns: As selected by Architect from full range of industry colors.

2.3 VINYL COMPOSITION FLOOR TILE

A. Products: Provide Products by:
1. Armstrong World Industries, Inc.; Standard Excelon – Multicolor & Imperial Texture.

B. Tile Standard: ASTM F 1066, Class 2, through-pattern tile.

C. Wearing Surface: Smooth.

D. Thickness: 0.125 inch.

E. Size: 12 by 12 inches .

F. Colors and Patterns: As selected by Architect from full range of industry colors.
1. Allow for up to 4 colors Random Pattern, evenly distributed.
a. 40% Color 1
b. 40% Color 2
c. 10% Color 3
d. 10% Color 4

2.4 STAIR TREAD, RISERS AND NOSINGS

A. Rubber Stair Treads with Riser:
1. Manufacturers: Subject to compliance with requirements, provide products by one of the following:
a. Armstrong
b. Roppe Corporation, USA.
c. Johnsonite (Basis of Design)

B. Johnsonite Rubber tread with Riser
1. Color (select one)
a. SafeTcork Cork/Rubber Tile, complies with ASTM F 2169, Type TS a. Style # 93 Texture Design, color as decided by Architect 1.) Complies with ASTM F 2169, Type TS, Class 2 (Patterned)
b. Tread Finish: Hammered
c. Risers: Angled (reference drawings)
d. 2.) Length-As required. Field Verify
e. 3.) Depth: 12 5/8” (314.3mm) nominal from inside of nose.
f. 4.) Thickness: 13/64” (5.15mm) tapering to 5/32” (3.97mm) nominal
g. 5.) Square Nose Length: Heavy Duty Square nose length
h. 6.) Nose Thickness: 5/32” (3.97mm) nominal
i. 7.) Tapered Nose: Yes
j. 8.) Relief Cut Nose: No
k. Color: Eco-Shell (Select from full line of colors

2.5 INSTALLATION MATERIALS

A. Trowelable Leveling and Patching Compounds: Latex-modified, portland cement based or blended hydraulic-cement-based formulation provided or approved by manufacturer for applications indicated.

B. Adhesives: Water-resistant type recommended by manufacturer to suit resilient products and substrate conditions indicated.

C. Metal Edge Strips: Extruded aluminum with mill finish of width shown, of height required to protect exposed edges of tiles and in maximum available lengths to minimize running joints.

PART 3 - EXECUTION

3.1 EXAMINATION

A. Examine substrates, with Installer present, for compliance with requirements for maximum moisture content and other conditions affecting performance of the Work.

B. Verify that finishes of substrates comply with tolerances and other requirements specified in other Sections and that substrates are free of cracks, ridges, depressions, scale, and foreign deposits that might interfere with adhesion of resilient products.

C. Proceed with installation only after unsatisfactory conditions have been corrected.

3.2 PREPARATION

A. Prepare substrates according to manufacturer's written instructions to ensure adhesion of resilient products.

B. Fill cracks, holes, and depressions in substrates with trowelable leveling and patching compound and remove bumps and ridges to produce a uniform and smooth substrate.

C. Do not install resilient products until they are same temperature as the space where they are to be installed.

1. Move resilient products and installation materials into spaces where they will be installed at least 48 hours in advance of installation.

D. Sweep and vacuum clean substrates to be covered by resilient products immediately before installation.

3.3 RESILIENT BASE INSTALLATION

A. Comply with manufacturer's written instructions for installing resilient base.

B. Apply resilient base to walls, columns, pilasters, casework and cabinets in toe spaces, and other permanent fixtures in rooms and areas where base is required.

C. Install resilient base in lengths as long as practicable without gaps at seams and with tops of adjacent pieces aligned.

D. Tightly adhere resilient base to substrate throughout length of each piece, with base in continuous contact with horizontal and vertical substrates.

E. Do not stretch resilient base during installation.

F. On masonry surfaces or other similar irregular substrates, fill voids along top edge of resilient base with manufacturer's recommended adhesive filler material.

G. Preformed Corners: Install preformed corners before installing straight pieces.

H. Job-Formed Corners:

1. Outside Corners: Use straight pieces of maximum lengths possible. Form without producing discoloration (whitening) at bends.
2. Inside Corners: Use straight pieces of maximum lengths possible.

3.4 FLOOR TILE INSTALLATION

A. Comply with manufacturer's written instructions for installing floor tile.

B. Lay out floor tiles from center marks established with principal walls, discounting minor offsets, so tiles at opposite edges of room are of equal width. Adjust as necessary to avoid using cut widths that equal less than one-half tile at perimeter.
1. Lay tiles in pattern indicated.

C. Match floor tiles for color and pattern by selecting tiles from cartons in the same sequence as manufactured and packaged, if so numbered. Discard broken, cracked, chipped, or deformed tiles.
1. Lay tiles in pattern of colors and sizes indicated.

D. Scribe, cut, and fit floor tiles to butt neatly and tightly to vertical surfaces and permanent fixtures including built-in furniture, cabinets, pipes, outlets, and door frames.

E. Extend floor tiles into toe spaces, door reveals, closets, and similar openings. Extend floor tiles to center of door openings.

F. Maintain reference markers, holes, and openings that are in place or marked for future cutting by repeating on floor tiles as marked on substrates. Use chalk or other nonpermanent, nonstaining marking device.

G. Install floor tiles on covers for telephone and electrical ducts, building expansion-joint covers, and similar items in finished floor areas. Maintain overall continuity of color and pattern between pieces of tile installed on covers and adjoining tiles. Tightly adhere tile edges to substrates that abut covers and to cover perimeters.

H. Adhere floor tiles to flooring substrates using a full spread of adhesive applied to substrate to produce a completed installation without open cracks, voids, raising and puckering at joints, telegraphing of adhesive spreader marks, and other surface imperfections.

3.5 RESILIENT ACCESSORY INSTALLATION

A. Comply with manufacturer's written instructions for installing resilient accessories.

B. Resilient Molding Accessories: Butt to adjacent materials and tightly adhere to substrates throughout length of each piece. Install reducer strips at edges of carpet and resilient floor covering that would otherwise be exposed.

3.6 CLEANING AND PROTECTION

A. Comply with manufacturer's written instructions for cleaning and protection of resilient products.

B. Perform the following operations immediately after completing resilient product installation:

1. Remove adhesive and other blemishes from exposed surfaces.
2. Sweep and vacuum surfaces thoroughly.
3. Damp-mop surfaces to remove marks and soil.

C. Protect resilient products from mars, marks, indentations, and other damage from construction operations and placement of equipment and fixtures during remainder of construction period.

D. Cover resilient products until Substantial Completion.

E. Floor Polish: Remove soil, visible adhesive, and surface blemishes from floor tile surfaces before applying liquid floor polish.
1. Apply two coat(s).

F. Cover floor tile until Substantial Completion.

END OF SECTION 096513

SECTION 09 6813 - TILE CARPETING

PART 1 - GENERAL

1.1 RELATED DOCUMENTS

A. Drawings and general provisions of the Contract, including General and Supplementary Conditions and Division 01 Specification Sections, apply to this Section.

1.2 SUMMARY

A. Section includes modular, tufted carpet tile.

B. Related Requirements:
   1. Division 09 Section "Resilient Base and Accessories" for resilient wall base and accessories installed with carpet tile.

1.3 ACTION SUBMITTALS

A. Product Data: For each type of product.

   1. Include manufacturer's written data on physical characteristics, durability, and fade resistance.
   2. Include installation recommendations for each type of substrate.

B. Samples: For each of the following products and for each color and texture required. Label each Sample with manufacturer's name, material description, color, pattern, and designation indicated on Drawings and in schedules.

   1. Carpet Tile: Full-size Sample.
   2. Exposed Edge, Transition, and Other Accessory Stripping: 6-inch- (150-mm-) long Samples.

C. Sustainability: Provide the Statement of the Achievement Level the carpet has attained for Silver, 37 to 51 points, based on specific Sustainable Attribute Performance for all product stages according to ANSI/NSF 140.

D. Qualification Data: For Installer.

E. Sample Warranty: For special warranty.

1.4 CLOSEOUT SUBMITTALS

A. Maintenance Data: For carpet tiles to include in maintenance manuals. Include the following:

   1. Methods for maintaining carpet tile, including cleaning and stain-removal products and procedures and manufacturer's recommended maintenance schedule.
   2. Precautions for cleaning materials and methods that could be detrimental to carpet tile.

1.5 MAINTENANCE MATERIAL SUBMITTALS

A. Furnish extra materials, from the same product run, that match products installed and that are packaged with protective covering for storage and identified with labels describing contents.

1. Carpet Tile: Full-size units equal to 5 percent of amount installed for each type indicated, but not less than 10 sq. yd. (8.3 sq. m).

1.6 QUALITY ASSURANCE

A. Installer Qualifications: An experienced installer who is certified by the International Certified Floorcovering Installers Association.

B. Fire-Test-Response Ratings: Where indicated, provide carpet tile identical to those of assemblies tested for fire response according to NFPA 253 by a qualified testing agency.

1.7 DELIVERY, STORAGE, AND HANDLING

A. Comply with CRI 104.

1.8 FIELD CONDITIONS

A. Comply with CRI 104 for temperature, humidity, and ventilation limitations.

B. Environmental Limitations: Do not deliver or install carpet tiles until spaces are enclosed and weathertight, wet work in spaces is complete and dry, and ambient temperature and humidity conditions are maintained at occupancy levels during the remainder of the construction period.

C. Do not install carpet tiles over concrete slabs until slabs have cured and are sufficiently dry to bond with adhesive and concrete slabs have pH range recommended by carpet tile manufacturer.

D. Where demountable partitions or other items are indicated for installation on top of carpet tiles, install carpet tiles before installing these items.

1.9 WARRANTY

A. Special Warranty for Carpet Tiles: Manufacturer agrees to repair or replace components of carpet tile installation that fail in materials or workmanship within specified warranty period.

1. Warranty does not include deterioration or failure of carpet tile due to unusual traffic, failure of substrate, vandalism, or abuse.
2. Failures include, but are not limited to, more than 10 percent edge raveling, snags, runs, excess static discharge, loss of tuft bind strength, loss of face fiber, and delamination.
3. Warranty Period: 10 years from date of Final Completion.

PART 2 - PRODUCTS

2.1 CARPET TILE

1. Manufacturers: Subject to compliance with requirements, provide product by one of the following:

   a. J&J, Invision (Basis of Design)
   b. Patcraft
   c. Tandus, C&A

B. Styles, as Selected by Architect from manufacturer's full range:
   1. J &J- Catwalk-off Modular

C. Color: As selected by Architect from manufacturer's full range.

D. Applied Soil-Resistance Treatment: Manufacturer's standard material.

E. Dye Method: 100 percent solution dyed.

F. Fiber Type: Nylon, "duracolor"

G. Pile Characteristic: Textured patterned loop

H. Gauge: 1/8"

I. Size: 24" x 24"

J. Backing System: Nexus Modular

K. Performance Characteristics: As follows:

1. Appearance Retention Rating: Heavy traffic, 3.0 minimum according to ASTM D 7330.
2. Dry Breaking Strength: Not less than 100 lbf (445 N) according to ASTM D 2646.
3. Dimensional Tolerance: Within 1/32 inch (0.8 mm) of specified size dimensions, as determined by physical measurement.
4. Dimensional Stability: 0.2 percent or less according to ISO 2551 (Aachen Test).
5. Resistance to Insects: Comply with AATCC 24.
6. Colorfastness to Crocking: Not less than 4, wet and dry, according to AATCC 165.
7. Colorfastness to Light: Not less than 4 after 40 AFU (AATCC fading units) according to AATCC 16, Option E.
8. Antimicrobial Activity: Not less than 2-mm halo of inhibition for gram-positive bacteria, not less than 1-mm halo of inhibition for gram-negative bacteria, and no fungal growth, according to AATCC 174.
9. Electrostatic Propensity: Less than **3.0** kV according to AATCC 134.
10. Emissions: Provide carpet tile that complies with testing and product requirements of CRI's "Green Label Plus" program.
11. Emissions: Provide carpet tile that complies with the product requirements of the California Department of Health Services' "Standard Practice for the Testing of Volatile Organic Emissions from Various Sources Using Small-Scale Environmental Chambers."

2.2 CARPET TILE

1. Manufacturers: Subject to compliance with requirements, provide product by one of the following:

   a. J&J Invision (Basis of Design)
   b. Patcraft
   c. Lees

B. Style: J&J- Inception

C. Color: (2) Two Colors 50/50% As selected by Architect from manufacturer's full range.

D. Applied Soil-Resistance Treatment: Manufacturer's standard material.

E. Dye Method: 100 percent solution dyed.

F. Fiber Type: BCF Nylon

G. Pile Characteristic: Pattern Loop

H. Gauge: 1/10

I. Size: 18” x 36”

J. Backing System: Nexus Modular

2.3 INSTALLATION ACCESSORIES

A. Trowelable Leveling and Patching Compounds: Latex-modified, hydraulic-cement-based formulation provided or recommended by carpet tile manufacturer.

B. Adhesives: Water-resistant, mildew-resistant, nonstaining, pressure-sensitive type to suit products and subfloor conditions indicated, that complies with flammability requirements for installed carpet tile and is recommended by carpet tile manufacturer for releasable installation.

1. Adhesives shall have a VOC content of 50 g/L or less when calculated according to 40 CFR 59, Subpart D (EPA Method 24).
2. Adhesives shall comply with the testing and product requirements of the California Department of Health Services' "Standard Practice for the Testing of Volatile Organic Emissions from Various Sources Using Small-Scale Environmental Chambers."

PART 3 - EXECUTION

3.1 EXAMINATION

A. Examine substrates, areas, and conditions, with Installer present, for compliance with requirements for maximum moisture content, alkalinity range, installation tolerances, and other conditions affecting carpet tile performance. Examine carpet tile for type, color, pattern, and potential defects.

B. Concrete Subfloors: Verify that concrete slabs comply with ASTM F 710 and the following:

1. Slab substrates are dry and free of curing compounds, sealers, hardeners, and other materials that may interfere with adhesive bond. Determine adhesion and dryness characteristics by performing bond and moisture tests recommended by carpet tile manufacturer.
2. Subfloor finishes comply with requirements specified in Division 03 Section "Cast-in-Place Concrete" for slabs receiving carpet tile.
3. Subfloors are free of cracks, ridges, depressions, scale, and foreign deposits.

C. Proceed with installation only after unsatisfactory conditions have been corrected.

3.2 PREPARATION

A. General: Comply with CRI 104, Section 6.2, "Site Conditions; Floor Preparation," and with carpet tile manufacturer's written installation instructions for preparing substrates indicated to receive carpet tile installation.

B. Use trowelable leveling and patching compounds, according to manufacturer's written instructions, to fill cracks, holes, depressions, and protrusions in substrates. Fill or level cracks, holes and depressions 1/8 inch (3 mm) wide or wider and protrusions more than 1/32 inch (0.8 mm) unless more stringent requirements are required by manufacturer's written instructions.

C. Remove coatings, including curing compounds, and other substances that are incompatible with adhesives and that contain soap, wax, oil, or silicone, without using solvents. Use mechanical methods recommended in writing by carpet tile manufacturer.

D. Clean metal substrates of grease, oil, soil and rust, and prime if directed by adhesive manufacturer. Rough sand painted metal surfaces and remove loose paint. Sand aluminum surfaces, to remove metal oxides, immediately before applying adhesive.

E. Broom and vacuum clean substrates to be covered immediately before installing carpet tile.

3.3 INSTALLATION

A. General: Comply with CRI 104, Section 14, "Carpet Modules," and with carpet tile manufacturer's written installation instructions.

B. Installation Method: As recommended in writing by carpet tile manufacturer.

C. Maintain dye lot integrity. Do not mix dye lots in same area.

D. Cut and fit carpet tile to butt tightly to vertical surfaces, permanent fixtures, and built-in furniture including cabinets, pipes, outlets, edgings, thresholds, and nosings. Bind or seal cut edges as recommended by carpet tile manufacturer.

E. Extend carpet tile into toe spaces, door reveals, closets, open-bottomed obstructions, removable flanges, alcoves, and similar openings.

F. Maintain reference markers, holes, and openings that are in place or marked for future cutting by repeating on finish flooring as marked on subfloor. Use nonpermanent, nonstaining marking device.

G. Install pattern parallel to walls and borders.

3.4 CLEANING AND PROTECTION

A. Perform the following operations immediately after installing carpet tile:

1. Remove yarns that protrude from carpet tile surface.
2. Vacuum carpet tile using commercial machine with face-beater element.

B. Protect installed carpet tile to comply with CRI 104, Section 16, "Protecting Indoor Installations."

C. Protect carpet tile against damage from construction operations and placement of equipment and fixtures during the remainder of construction period. Use protection methods indicated or recommended in writing by carpet tile manufacturer.

END OF SECTION 09 6813

SECTION 096900 - ACCESS FLOORING

PART 1 - GENERAL

1.1 RELATED DOCUMENTS

A. Drawings and general provisions of the Contract, including General and Supplementary Conditions and Division 01 Specification Sections, apply to this Section.

1.2 SUMMARY

A. Section Includes:

1. Access-flooring panels.
2. Understructure.
3. Floor panel coverings.

1.3 COORDINATION

A. Coordinate location of mechanical and electrical work in underfloor cavity to prevent interference with access-flooring pedestals.

B. Mark pedestal locations on subfloor using a grid to enable mechanical and electrical work to proceed without interfering with access-flooring pedestals.

1.4 ACTION SUBMITTALS

A. Product Data: For each type of product.

B. Shop Drawings: Include layout of access-flooring system and relationship to adjoining Work based on field-verified dimensions.

1. Details and sections with descriptive notes indicating materials, finishes, fasteners, typical and special edge conditions, accessories, and understructures.

C. Samples for Verification: For the following products:

1. Floor Covering: Full-size units.
2. Exposed Metal Accessories: Approximately 10 inches in length.
3. One complete full-size floor panel, pedestal, and understructure unit for each type of access-flooring system required.

1.5 INFORMATIONAL SUBMITTALS

A. Qualification Data: For Installer.

B. Product Certificates: For each type of access-flooring system.

C. Product Test Reports: For each type of flooring material and exposed finish, for tests performed by a qualified testing agency.

1.6 MAINTENANCE MATERIAL SUBMITTALS

A. Furnish extra materials that match products installed and that are packaged with protective covering for storage and identified with labels describing contents.

1. Flooring Panels: 5%
2. Pedestals: 5%

1.7 QUALITY ASSURANCE

A. Installer Qualifications: An entity that employs installers and supervisors who are trained and approved by manufacturer.

1.8 FIELD CONDITIONS

A. Environmental Limitations: Do not install access flooring until spaces are enclosed, ambient temperature is between 50 and 90 deg F, and relative humidity is not less than 20 and not more than 70 percent.

PART 2 - PRODUCTS

2.1 PERFORMANCE REQUIREMENTS

A. Seismic Performance: Access flooring shall withstand the effects of earthquake motions determined according to ASCE/SEI 7.

B. Fire Performance:

1. Surface-Burning Characteristics: Comply with ASTM E 84; testing by a qualified testing agency. Identify products with appropriate markings of applicable testing agency.
2. Combustion Characteristics: ASTM E 136.

2.2 MANUFACTURERS

A. Source Limitations: Obtain access-flooring system from single source from single manufacturer.

2.3 FLOOR PANELS

A. Floor Panels, General: Provide modular panels interchangeable with other field panels without disturbing adjacent panels or understructure.

1. Size: Nominal .
2. Attachment to Understructure: .
3. One-to-One Carpet Tile: Fabricate panels to accept one-to-one carpet tile.

B. Wood-Core Steel Panels: Fabricated with 1-inch- thick particleboard core, made without urea formaldehyde laminated to top and bottom steel face sheets, with metal surfaces protected against corrosion by manufacturer's standard factory-applied finish, and with a flame-spread index of 25 or less according to ASTM E 84. Provide core edges enclosed with upturned, die-formed, bottom-sheet edge or with perimeter steel channel welded to top sheet and welded or bonded to bottom sheet.

1. Manufacturers: Subject to compliance with requirements, provide products by the following;
2. Basis-of-Design Product: Subject to compliance with requirements, provide or comparable product by one of the following:
   a. Tate Access Floors, Inc.(Basis of Design)
   b. ASM Modular Systems, Inc.
   c. Bergvik North America, Inc.
   d. Camino Modular Systems, Inc.
   e. Computer Environments, Inc.

2.4 PRODUCT

A. Access floor system shall be manufactured by Tate Access Floors, Inc. and shall consist of Woodcore WC5000 access floor panels supported by a cornerlock understructure system.

2.5 UNDERSTRUCTURE

A. Pedestals: Assembly consisting of base, column with provisions for height adjustment, and head (cap); made of steel.

1. Provide pedestals designed for use in seismic applications.
2. Base: Square or circular base with not less than 16 sq. in. of bearing area.
3. Column: Of height required to bring finished floor to elevations indicated. Weld to base plate.
4. Provide vibration-proof leveling mechanism for making and holding fine adjustments in height over a range of not less than 2 inches and for locking at a selected height, so deliberate action is required to change height setting and prevent vibratory displacement.
5. Head: Designed to support the panel system indicated.

a. Provide sound-deadening pads or gaskets at contact points between heads and panels.
b. Bolted Assemblies: Provide head with four holes aligned with holes in floor panels for bolting of panels to pedestals.

2.6 FABRICATION

A. Fabrication Tolerances:

1. Size: Plus or minus 0.020 inch of required size.
2. Squareness: Plus or minus 0.015 inch between diagonal measurements across top of panel.
3. Flatness: Plus or minus 0.035 inch, measured on a diagonal on top of panel.

B. Panel Markings: Clearly and permanently mark floor panels on their underside with panel type and concentrated-load rating.

C. Bolted Panels: Provide panels with holes drilled in corners to align precisely with threaded holes in pedestal heads and to accept countersunk screws with heads flush with top of panel.

1. Captive Fasteners: Provide fasteners held captive to panels.

D. Cutouts: Fabricate cutouts in floor panels for cable penetrations and service outlets. Provide reinforcement or additional support, if needed, to make panels with cutouts comply with structural performance requirements.

1. Number, Size, Shape, and Location: As indicated.
2. Grommets: Where indicated, fit cutouts with manufacturer's standard grommets; or, if size of cutouts exceeds maximum grommet size available, trim edge of cutouts with manufacturer's standard plastic molding with tapered top flange.
3. Provide foam-rubber pads for sealing annular space formed in cutouts by cables.

2.7 ACCESSORIES

A. Service Outlets: Standard UL-listed and -labeled assemblies, for recessed mounting flush with top of floor panels; for power, communication, and signal services; and complying with the following requirements:

1. Structural Performance: Cover capable of supporting a [300-lbf] [800-lbf] [1000-lbf] concentrated load.